The 2021 Handbook

Spectrum Elektrotechnik GmbH

Adapters

80905 Munich, Germany
P.O. Box 450533
Telephone: +49-89-3548-040
Facsimile: +49-89-3548-0490
www.spectrum-et.com * Email: sales@spectrum-et.com

Spectrum Elektrotechnik GmbH is a leading manufacturer of RF and Microwave Components in the Frequency Range of DC to 70.0 GHz. The products are published in seven individual catalogs, showing detailed information and comprehensive data.

Connectors,
DC - 70 GHz, 50 Ohms
Blind Mate Connectors
Coaxial Connectors
High Power Connectors
Multi Pin Connectors
Push-On Connectors

Quick Connections
DC to 65 GHz, 50 Ohms
Blind Mate Connectors
Multi Coax Connections,
short overview of
SQ-, TQ-, IQ-, BQ-, CQ-,
RQ-Series,
Push - On Adapters
Push - On Connectors
Push - On Cable Assemblies

Cable Assemblies
DC - 70 GHz, 50 Ohms
ANA Test Cables
Flexible Cable Assemblies
Low Loss Cable Assemblies
Phase Stable Cable Assemblies
Semi Rigid Cable Assemblies
(Dia. 0.34" to 1")

Adjusting Phase
DC - 63 GHz, 50 Ohms
Phase Adjustable Connectors
Phase Adjustable Adapters

Test Necessities and Access
DC - 70 GHz, 50 Ohms
LRL, TRL Calibration and
Verification Kits
ANA Cable Assemblies
Torque Wrenches
Interface Gauges
Calibration Kits
Terminations

Circulators and Isolators
Connectorized Isolators and
Circulators, Drop In Isolators
and Circulators
Lumped Design Isolators

Multiports
DC to 65 GHz
Circular Connectors,
SQ-, TQ-, IQ-, BQ-, CQ-Series
Rectangular Connectors,
RQ-Series

Product Portfolio
Coaxial Connectors and
Adapters
Multiport Assemblies
Coaxial Delay Lines
Waveguide to Coax-Adapters
Phase Adjusters
Gain Amplitude Equalizers
Cable Assemblies etc.

Dimensions shown are Inches over Millimeters or vice versa. Standard units have stainless finish (last 2 digits of the P/N are -02). Interfaces are per DIN 47 223, DIN 47 226, IEC 169-4, IEC 169-7, IEC 169-8, IEC 457-2, IEC 60169-5, IEEE 287, MIL-PRF-39012, MIL DTL-24044, MIL DTL-3643,MIL-STD-348B, where applicable

This Handbook shows a most extensive line of Microwave Adapters in the frequency range of DC to 70 GHz.

The Table of Contents at pages 7 to 12 will identify the individual sections that are shown in this Handbook. Each section is headed by a reference table, indicating to you the contents of the section or guiding you to other related divisions, specification sheets, showing the electrical, mechanical and environmental performance of the particular connector series and their interface dimensions. You will obtain details on a most complete line of adapters.

But just in case you still do not find exactly the product you require, please contact the factory or your nearest Spectrum Area Representative. Due to continuous development we may have solved a similar problem for someone else, or did develop already the product you require.

If you know the Part Number of the product you would like to find more information about, please refer to the **Part Number Index** located in the last section of this Handbook.

As it is our main goal to improve specification and performance of the products, Spectrum Elektrotechnik GmbH has to reserve the right to change specifications, design and any other information shown in this Handbook at any time without previous notice.

Because of the comprehensive information gathered in this volume, we call it a Handbook, hopefully the Handbook you like to work with best. If you find the time, we would appreciate your personal opinion about this Handbook.

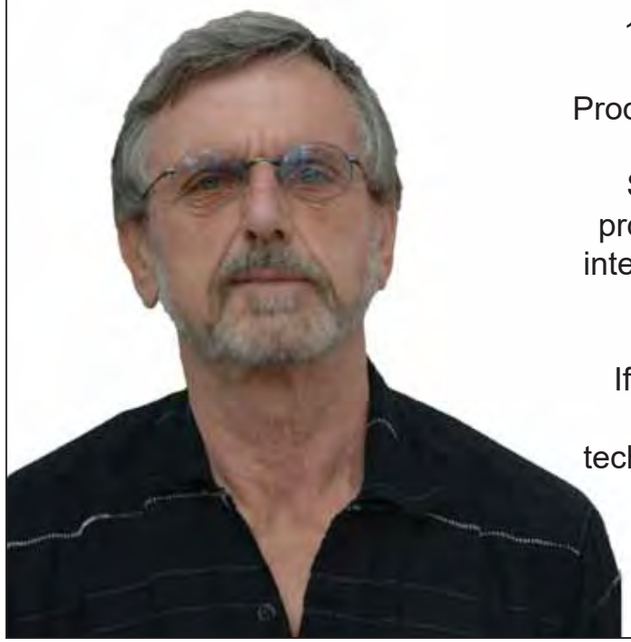

You will find in this Handbook, 1150 Adapters at 532 pages, but these are just the mostly used Products, many styles, all designed and manufactured 100 % by Spectrum Elektrotechnik GmbH, produced in superior quality, using internally the smallest tolerances of +/-5µm (.0002”) to guaranteeing exactly 50 Ohms impedance. If you do not find the Adapter you need for an application, need technical support, or information on price and delivery, then please contact your nearest Spectrum Representative, or please contact us direct.

Dimensions shown are Inches over Millimeters or vice versa. Standard units have stainless finish (last 2 digits of the P/N are -02). Interfaces are per DIN 47 223, DIN 47 226, IEC 169-4, IEC 169-7, IEC 169-8, IEC 457-2, IEC 60169-5, IEEE 287, MIL-PRF-39012, MIL DTL-24044, MIL DTL-3643,MIL-STD-348B, where applicable

The Company

Spectrum Elektrotechnik GmbH was founded in 1981 and has become a leading supplier of state-of-the-art components used in the RF and Microwave Technology, such as Connectors, Adapters, Cable Assemblies, Phase Shifters, Couplers, Gain Amplitude Equalizers, Terminations, Calibration Kits, etc., etc. In Addition, a number of complex and integrated components have been engineered and manufactured for certain programs and to the customer needs. Throughout the world, Spectrum Elektrotechnik GmbH has established a reputation as a design, development and manufacturing center. The Company has been recognized as setting standards, introducing new ideas and leading into new technologies.

The Products

The products are used in commercial systems such as Cellular Applications, Radios, SatCom/VSAT, Satellites and Space Applications, Test Centers,Wireless Communication and in many defense applications as well, like Airborne Radars, Electronic Intelligence, Electronic Warfare, Jamming Systems, Missile Guidance, etc. Whenever RF or Microwave Expertise and Advanced Manufacturing Technologies are needed you will find products of Spectrum Elektrotechnik GmbH.

Capabilities and Facilities

The departments within the Company have been set up as an intelligent Network, guaranteeing complete in-house control of every operation and procedure, from design, development, manufacturing, assembly and testing. Spectrum Elektrotechnik GmbH is small enough to react quickly and large enough to handle extensive orders of important programs successfully. This capability enables to develop, manufacture and test the extensive range of Products meeting the highest standards of quality and performance.

Spectrum Elektrotechnik GmbH introduced CAD design centers already in 1984 as well as CAD/CAM work stations to provide data to computer controlled machines. The Company operates the most advanced machines and uses Test Equipment to 71 GHz, equipment from Keysight, Anritsu and Rohde & Schwarz. Manufacturing and Quality Control comply to DIN-ISO 9000, permitting to meet strict requirements in Commercial, Avionics, Military and Hi-Rel applications.

A Final Inspection to 100% is standard, Tests on electrical and physical performance, their tolerances, the workmanship, and the compliance to applicable specifications.

Support

An adequate and knowledgeable staff is always available to support the Customers in respect to Applications, Engineering and Sales. The staff acts as a Team, understanding applications, specifications, needs, priorities and problems as well. A net of distributors assures immediate delivery of off the shelf products. Authorized technical knowledgeable Representatives will provide immediate assistance to the customer's needs.

This Handbook is accurate and up-to-date as of the time of printing. Continuing product development will lead to additional and changing information.

Dimensions shown are Inches over Millimeters or vice versa. Standard units have stainless finish (last 2 digits of the P/N are -02). Interfaces are per DIN 47 223, DIN 47 226, IEC 169-4, IEC 169-7, IEC 169-8, IEC 457-2, IEC 60169-5, IEEE 287, MIL-PRF-39012, MIL DTL-24044, MIL DTL-3643,MIL-STD-348B, where applicable

Ordering

Please include both, Spectrum Elektrotechnik GmbH part number, and a description of the item(s) ordered. If special features are required, describe them as completely as possible and include an engineering sketch. Orders may be placed directly with the factory in Munich or with any authorized Spectrum Elektrotechnik GmbH Representative.

Acceptance of Orders

All orders are subject to acceptance at the discretion of the factory and with an Order Acknowledgment from Spectrum Elektrotechnik GmbH.

Terms

Upon approval of credit, payment is due Net 30 days from date of invoice. Late payments are subject to a 1.5 % monthly charge on past due balances.

Shipments

Spectrum Elektrotechnik GmbH ships via the most expedient reliable carrier. Shipment FCA, Spectrum Elektrotechnik GmbH plant, will be sent freight prepaid and billed unless other prior arrangements are made. Spectrum Elektrotechnik GmbH will use any acceptable method of delivery specifically requested by customer.

Damaged Materials/Shortages

All orders should be inspected upon receipt for both completeness and to insure receipt of materials in proper condition. All claims for shortages must be made within thirty (30) days after date of shipment of material from Spectrum Elektrotechnik GmbH plant. Title to goods passes to the Buyer upon delivery to the carrier and risk of loss or damage shall thereafter rest with the Buyer. Claims for damage or loss while material is in transit must be made against the carrier by the Buyer.

Cancellation

Cancellation of, or changes to an order acknowledged by Spectrum Elektrotechnik GmbH are accepted only upon terms that protect Spectrum Elektrotechnik GmbH against loss.

Returns

Excess or unused material cannot be returned for credit without factory authorization. Such material is subject to a handling charge of not less than 15 % upon return and inspection of material at the factory. In no case will Spectrum Elektrotechnik GmbH authorize return of material beyond ninety (90) days after shipment from the factory. Credit for returned material is issued by Spectrum Elektrotechnik GmbH only to the original purchaser. Freight charges for returned material is the responsibility of the Buyer.

Defective Material

Claims for defective material or workmanship are subject to verification by Spectrum Elektrotechnik GmbH Quality Control, and must have prior factory authorization. Upon verification, Spectrum Elektrotechnik GmbH reserves the right to repair or replace, as deemed necessary.

Prices / Specifications

Unless otherwise specified, prices quoted are ex works Spectrum Elektrotechnik GmbH plant. Both prices and specifications are subject to modification without prior notice.

Patent and Trademark Indemnity

Buyer agrees at Buyer's expense to protect and defend Seller against any and all claims of patent or trademark infringement arising from Seller's compliance with Buyer's designs or specifications or instruction and to hold Seller harmless from all losses, damages, costs and expenses attributable to any such claim or claims. Seller shall have the right to approve or disapprove counsel designated by Buyer to defend such claims.

Warranty

Spectrum Elektrotechnik GmbH warrants products of its manufacture to be free from defects in material and workmanship under conditions of normal use. If, within on e year after delivery of the original owner and after prepaid return by the original owner, any Spectrum Elektrotechnik GmbH product is found to be defective, Spectrum Elektrotechnik GmbH shall, at its option, repair or replace said defective item. This warranty does not apply to products which have been disassembled, modified or subjected to conditions exceeding the applicable specifications or ratings.

Spectrum Elektrotechnik GmbH reserves the right to make design changes without notice on any of its products and without any obligation to make same or similar changes to items previously purchased. In no event does Spectrum Elektrotechnik GmbH assume liability for installation labor or for consequential damages. This warranty is the extent of the obligation or liability assumed by Spectrum Elektrotechnik GmbH with respect to its products, and no other warranty or guarantee is either expressed or implied.

Dimensions shown are Inches over Millimeters or vice versa. Standard units have stainless finish (last 2 digits of the P/N are -02). Interfaces are per DIN 47 223, DIN 47 226, IEC 169-4, IEC 169-7, IEC 169-8, IEC 457-2, IEC 60169-5, IEEE 287, MIL-PRF-39012, MIL DTL-24044, MIL DTL-3643,MIL-STD-348B, where applicable

Foreword to the Table of contents

Following a few explanations regarding:
- How the Table of Contents was put together
- in order to find the product you are looking for

We are using the 2.4mm Adapters as example for some explanations:

Section		Description	Page	
2.4 mm	B	2.4mm Overview & Specifications	B	1
		2.4mm In-Series		4
		2.4mm In-Series of equal electrical length		8
		Between Series 2.4mm to 1.85mm		10
	EE	2.4mm In-Series Hermetically Sealed	EE	5
	C	Between Series 2.4mm to 2.92mm	C	17
		Between Series 2.4mm to 2.92mm of equal electrical lengths		23
	D	Between Series 2.4mm to 3.5mm	D	10
	CC	In-Series 2.4mm NMD to 2.4mm	CC	3
		Between Series 2.4mm NMD to 2.92mm		4
		Between Series 2.4mm NMD to 2.92mm NMD		7
		Between Series 2.4mm 2.92mm NMD		7
		Between Series 2.4mm NMD to 3.5mm		4
		Between Series 2.4mm to 3.5mm NMD		10
		Between Series 2.4mm NMD to 7mm		5
		Between Series 2.4mm NMD to N		6
		Between Series 2.4mm to N NMD		14
	E	Between Series 2.4mm to 7mm	E	5
	K	Between Series 2.4mm to N	K	20
	R	Between Series 2.4mm to SMP	R	12
	S	Between Series 2.4mm to SMP Calibration Kit Units	S	10
	U	Between Series 2.4mm to SMPM of equal electrical lengths	U	6
	X	Between Series 2.4mm to TNCA	X	20
	AA	Between Series 2.4mm to 3.5mm with Metric Thread	AA	5

- **B** is the main section for 2.4mm Adapters
- In **EE** you also will find 2.4mm units, as there are listed the hermetically sealed Adapters of all connector styles
- Some Between Series Adapters using **2.4mm to 2.92mm** you will find in the 2.92mm Section **C**
- **2.4mm to 3.5mm** you find in **D**, the 3.5mm Section
- You also find **2.4mm NMD** in **CC**, the section for all NMD Adapters
- It is assumed that you rather are looking for **7mm to 2.4mm**, therefore **2.4mm to 7mm** units you find in the 7mm section, which is **E**
- It is also assumed that you never want to go from **2.4mm to N**, but rather from **N to 2.4mm**, therefore you will find these Between Series units in Section **K**, which is the N-Adapter Section
- **2.4mm to SMP** are listed in the SMP-Section, which is **R**
- **2.4mm to SMP Calibration Connectors** are seen in Section **S**
- **2.4mm to SMPM** units you find in the SMPM-Section, which is **U**, as it it also assumed that you are rather looking for **SMPM to 2.4mm**, and not vice versa.
- **2.4mm to TNC** Between Series units are in the TNC-Section, which is **X**
- **2.4mm to 3.5mm Metric** are displayed in the Metric Section, which is **AA**

Dimensions shown are Inches over Millimeters or vice versa. Standard units have stainless finish (last 2 digits of the P/N are -02). Interfaces are per DIN 47 223, DIN 47 226, IEC 169-4, IEC 169-7, IEC 169-8, IEC 457-2, IEC 60169-5, IEEE 287, MIL-PRF-39012, MIL DTL-24044, MIL DTL-3643,MIL-STD-348B, where applicable

Table of contents

Section	Description	Page	
1	Catalogs	1	2
	Introduction		3
	Company profile		4
	Ordering information		5
	Foreword to the Table of contents		6
	Table of Contents		7

Type	Section	Description	Page	
1.85 mm	A	1.85mm Overview & Specifications	A	2
		1.85mm In-Series		5
	EE	1.85mm In-Series Hermetically Sealed	EE	4
	CC	1.85mm NMD to 1.85mm	CC	2
	B	Between Series 1.85mm to 2.4mm	B	10
	C	Between Series 1.85mm to 2.92mm	C	16
2.4 mm	B	2.4mm Overview & Specifications	B	1
		2.4mm In-Series		4
		2.4mm In-Series of equal electrical length		8
		Between Series 2.4mm to 1.85mm		10
	EE	2.4mm In-Series Hermetically Sealed	EE	5
	C	Between Series 2.4mm to 2.92mm	C	17
		Between Series 2.4mm to 2.92mm of equal electrical lengths		23
	D	Between Series 2.4mm to 3.5mm	D	10
	CC	In-Series 2.4mm NMD to 2.4mm	CC	3
		Between Series 2.4mm NMD to 2.92mm		4
		Between Series 2.4mm NMD to 2.92mm NMD		7
		Between Series 2.4mm 2.92mm NMD		7
		Between Series 2.4mm NMD to 3.5mm		4
		Between Series 2.4mm to 3.5mm NMD		10
		Between Series 2.4mm NMD to 7mm		5
		Between Series 2.4mm NMD to N		6
		Between Series 2.4mm to N NMD		14
	E	Between Series 2.4mm to 7mm	E	5
	K	Between Series 2.4mm to N	K	20
	R	Between Series 2.4mm to SMP	R	12
	S	Between Series 2.4mm to SMP Calibration Kit Units	S	10
	U	Between Series 2.4mm to SMPM of equal electrical lengths	U	6
	X	Between Series 2.4mm to TNCA	X	20
	AA	Between Series 2.4mm to 3.5mm with Metric Thread	AA	5
2.92mm	C	2.92mm Overview & Specifications	C	1
		2.92mm In-Series		4
		2.92mm In-Series of equal electrical length		15
		Between Series 2.92mm to 1.85mm		16
		Between Series 2.92mm to 2.4mm		17
		Between Series 2.92mm to 2.4mm of equal el. length		23
	EE	2.92mm In-Series Hermetically Sealed	EE	6
	D	Between Series 2.92mm to 3.5mm	D	16
	E	Between Series 2.92mm to 7mm	E	6
	K	Between Series 2.92mm to N	K	22
	R	Between Series 2.92mm to SMP	R	12
	S	Between Series 2.92mm to SMP Calibration Kit Units	S	15
	T	Between Series 2.92mm to SMP LRL Calibration Kit Units	T	7
	U	Between Series 2.92mm to SMPM	U	8
	V	Between Series 2.92mm to SSMA	V	4
	CC	Between Series 2.92mm to 2.4mm NMD	CC	4
		Between Series 3.5mm to 2.92mm NMD		8
		Between Series 2.92mm NMD to 2.4mm		7
		Between Series 2.92mm NMD to 2.4mm NMD		4
		In-Series 2.92mm NMD to 2.92mm		7
		Between Series 2.92mm NMD to 3.5mm		8
		Between Series 2.92mm to 3.5mm NMD		10
		Between Series 2.92mm NMD to 7mm		9
		Between Series 2.92mm NMD to N		9

Dimensions shown are Inches over Millimeters or vice versa. Standard units have stainless finish (last 2 digits of the P/N are -02). Interfaces are per DIN 47 223, DIN 47 226, IEC 169-4, IEC 169-7, IEC 169-8, IEC 457-2, IEC 60169-5, IEEE 287, MIL-PRF-39012, MIL DTL-24044, MIL DTL-3643,MIL-STD-348B, where applicable

Spectrum Elektrotechnik GmbH

Type	Section	Description	Page	
2.92mm Rev. Sex	1C	2.92mm Reverse Sex Overview & Specifications	1C	1
		2.92mm Reverse Sex Between-Series to 2.92mm		4
3.5mm	D	3.5mm Overview & Specifications	D	1
		3.5mm In-Series		4
		3.5mm In-Series of equal electrical length		9
		Between Series 3.5mm to 2.4mm		10
		Between Series 3,5mm to 2.4mm of equal el. length		15
		Between Series 3.5mm to 2.92mm		16
	E	Between Series 3.5mm to 7mm	E	8
	CC	Between Series 3.5mm to 2.4mm NMD	CC	5
		Between Series 3.5mm to 2.92mm NMD		8
		Between Series 3.5mm NMD to 2.4mm		10
		Between Series 3.5mm NMD to 2.92mm		10
		Between Series 3.5mm NMD to 3.5mm		11
		In-Series 3.5mm NMD to 3.5mm NMD		11
		Between Series 3.5mm NMD to 7mm		12
		Between Series 3.5mm NMD to N		12
		Between Series 3.5mm to N NMD		14
	K	Between Series 3.5mm to N	K	24
		Between Series 3.5mm to N of equal electrical lengths		27
	S	Between Series 3.5mm to SMP Calibration Kit Units	S	23
	X	Between Series 3.5mm to TNC	X	21
	Z	Between Series 3.5mm to TNX	Z	5
	AA	Between Series 3.5mm to 3.5mm with Metric Thread	AA	4
		Between Series 3.5mm to N with Metric Thread		9
7mm	E	7mm Overview & Specifications	E	1
		7mm In-Series		4
		Between Series 7mm to 2.4mm		5
		Between Series 7mm to 2.92mm		6
		Between Series 7mm to 3.5mm		8
		Between Series 7mm to C		10
		Between Series 7mm to SC		11
		Between Series 7mm to N		12
		Between Series 7mm to N of equal electrical lengths		13
		Between Series 7mm to SMA		14
		Between Series 7mm to TNC		16
	R	Between Series 7mm to SMP	R	15
	CC	Between Series 7mm to 2.4mm NMD	CC	5
		Between Series 7mm to 2.92mm NMD		9
		Between Series 7mm to 3.5mm NMD		12
	FF	Between Series 7mm to 2/5.5	FF	12
	Z	Between Series 7mm to TNX	Z	6
7/16	F	7/16 Overview & Specifications	F	1
		7/16 mm In-Series		4
		Between Series 7/16 to N		5
	DD	Between Series 7/16 to 7/16 Push-On and Slide-On	DD	8
	L	Between Series 7/16 to SBX	L	4
	M	Between Series 7/16 to SBY	M	4
BMA	G	BMA Overview & Specifications	G	2
		Between Series BMA to N		5
		Between Series BMA to SMA		7
BNC	H	BNC Overview & Specifications	H	1
		BNC In-Series		4
	K	Between Series BNC to N	K	28
	P	Between Series BNC to SMA	P	14
	X	Between Series BNC to TNC	X	24
	FF	Between Series BNC to 1.8/5.6	FF	8
C	I	C Overview & Specifications	I	1
		Between Series C to N		4
HN	J	HN Overview & Specifications	J	1
		Between Series HN to N		4

Dimensions shown are Inches over Millimeters or vice versa. Standard units have stainless finish (last 2 digits of the P/N are -02). Interfaces are per DIN 47 223, DIN 47 226, IEC 169-4, IEC 169-7, IEC 169-8, IEC 457-2, IEC 60169-5, IEEE 287, MIL-PRF-39012, MIL DTL-24044, MIL DTL-3643,MIL-STD-348B, where applicable

Spectrum Elektrotechnik GmbH
Germany
www.spectrum-et.com
sales@spectrum-et.com
Phone: +49 / 89 / 35 48 04 0
Fax: +49 / 89 / 35 48 04 90

Spectrum Elektrotechnik GmbH

Type	Section	Description	Page	
N	K	N Overview & Specifications	K	1
		N In-Series		4
		N In-Series of equal electrical length		18
		Between Series N to 2.4mm		20
		Between Series N to 2.92mm		22
		Between Series N to 3.5mm		24
		Between Series N to 3.5mm of equal electrical lengths		27
		Between Series N to BNC		28
		Between Series N to SMA		30
		Between Series N to TNC		39
	EE	N In-Series Hermetically Sealed	EE	7
	DD	Between Series N to N Push-On and Slide-On	DD	14
	CC	Between Series N to 2.4mm NMD	CC	6
		Between Series N to 2.92mm NMD		9
		Between Series N to 3.5mm NMD		12
		Between Series N to N NMD		15
		Between Series N NMD to 2.4mm		14
		Between Series N NMD to 3.5mm		14
	AA	Between Series N to N with Metric Thread	AA	8
		Between Series N with Metric Thread to 3.5mm		9
		Between Series N with Metric Thread to SMA		10
	F	Between Series N to 7/16	F	5
	DD	Between Series N to 7/16 Push-On and Slide-On	DD	11
	G	Between Series N to BMA	G	5
	K	Between Series N to BNC	K	28
	I	Between Series N to C	I	4
	J	Between Series N to HN	J	4
	L	Between Series N to SBX	L	5
	M	Between Series N to SBY	M	5
	N	Between Series N to SC	N	7
	Z	Between Series N to TNX	Z	7
	Y	Between Series N to TNC Reverse Sex	Y	4
	DD	Between Series N to TNC Push-On and Slide-On	DD	31
		Between Series N to TNC Push-On and Slide-On Reverse Sex		45
	EE	Between Series N to TNC Hermetically Sealed	EE	10
	FF	Between Series N to 1.4/4.4	FF	4
		Between Series N to 3 1/8		20
SBX	L	SBX Overview & Specifications	L	1
		Between Series SBX to 7/16		4
		Between Series SBX to N		5
		Between Series SBX to SMA		7
SBY	M	SBY Overview & Specifications	M	1
		Between Series SBY to 7/16		4
		Between Series SBY to N		5
		Between Series SBY to SMA		7
SC	N	SC Overview & Specifications	N	1
		SC In-Series		4
		SC In-Series of equal electrical lengths		6
		Between Series SC to N		7
		Between Series SC to SMA and TNC		10
SCC	O	SCC Overview & Specifications	O	1
		A) SCC Adapters when nothing else does fit		4
		B) Adapters for unique requirements		8

Dimensions shown are Inches over Millimeters or vice versa. Standard units have stainless finish (last 2 digits of the P/N are -02). Interfaces are per DIN 47 223, DIN 47 226, IEC 169-4, IEC 169-7, IEC 169-8, IEC 457-2, IEC 60169-5, IEEE 287, MIL-PRF-39012, MIL DTL-24044, MIL DTL-3643,MIL-STD-348B, where applicable

Spectrum Elektrotechnik GmbH
Germany
www.spectrum-et.com
sales@spectrum-et.com
Phone: +49 / 89 / 35 48 04 0
Fax: +49 / 89 / 35 48 04 90

Table of contents

Type	Section	Description	Page	
SMA	P	SMA Overview & Specifications	P	1
		SMA In-Series		4
		Between Series SMA to BNC		14
	E	Between Series SMA to 7mm	E	14
	G	Between Series SMA to BMA	G	7
	K	Between Series SMA to N	K	30
	DD	Between Series SMA to N Push-On and Slide-On	DD	24
	AA	Between Series SMA to N with Metric Thread	AA	10
	L	Between Series SMA to SBX	L	7
	M	Between Series SMA to SBY	M	7
	N	Between Series SMA to SC	N	10
	AA	Between Series SMA to SMA with Metric Thread	AA	14
	DD	Between Series SMA to SMA Push-On and Slide-On	DD	40
		Between Series SMA to SMA Push-On and Slide-On Reverse Sex		46
	R	Between Series SMA to SMP	R	16
	U	Between Series SMA to SMPM	U	9
	V	Between Series SMA to SSMA	V	5
	W	Between Series SMA to SPM	W	5
	X	Between Series SMA to TNCA	X	25
	DD	Between Series SMA to TNC Push-On and Slide-On	DD	34
	Z	Between Series SMA to TNX	Z	9
SMA Rev. Sex	Q	SMA Reverse Sex Overview & Specifications	Q	1
		Between-Series SMA Reverse Sex to SMA		4
SMP	R	SMP Overview & Specifications	R	1
		SMP In-Series		4
		Between Series SMP to 2.4mm		12
		Between Series SMP to 2.92mm		12
		Between Series SMP to 7mm		15
		Between Series SMP to SMA		16
SMP CalKit Open/Short/Load/ Throughline	S	SMP CalKit Adapters Overview & Specifications	S	1
		SMP CalKit In-Series		6
		SMP CalKit In-Series of equal electrical length		8
		Between Series SMP CalKit to 2.4mm		10
		Between Series SMP CalKit to 2.4mm of equal electrical length		12
		Between Series SMP CalKit to 2.92mm		15
		Between Series SMP CalKit to 2.92mm of equal electrical length		19
		Between Series SMP CalKit to 3.5mm		23
		Between Series SMP CalKit to 3.5mm of equal electrical length		24
SMP CalKit **LRL Type**	T	LRL Overview	T	1
		LRL Introduction		2
		In-Series SMP LRL-Type		4
		In-Series 2.92mm LRL-Type		7
SMPM	U	SMPM Overview & Specifications	U	1
		SMPM In-Series		4
		SMPM In-Series of equal electrical lengths		5
		Between Series SMPM to 2.4mm of equal electrical length		6
		Between Series SMPM to 2.92mm		8
		Between Series SMPM to SMA		9
SSMA	V	Overview and Specifications	V	1
		Between Series SSMA to 2.92mm		4
		Between Series SSMA to SMA		5
SPM	W	SPM Overview & Specifications	W	1
		The difference between SPM and SMA		4
		Adapter Series SPM to SMA		5
		Adapter Series SPM to SMA of equal electrical length		7

Dimensions shown are Inches over Millimeters or vice versa. Standard units have stainless finish (last 2 digits of the P/N are -02). Interfaces are per DIN 47 223, DIN 47 226, IEC 169-4, IEC 169-7, IEC 169-8, IEC 457-2, IEC 60169-5, IEEE 287, MIL-PRF-39012, MIL DTL-24044, MIL DTL-3643,MIL-STD-348B, where applicable

Spectrum Elektrotechnik GmbH
Germany
www.spectrum-et.com
sales@spectrum-et.com
Phone: +49 / 89 / 35 48 04 0
Fax: +49 / 89 / 35 48 04 90

Table of contents

Type	Section	Description	Page	
TNC	X	TNC Overview	X	1
		TNC Specifications per MIL-STD-348B, 11GHz		2
		TNCA Specifications per MIL-STD-348B, 18 GHz		4
		TNCA In-Series		6
		TNCA In-Series of equal electrical length		18
		Between Series TNCA to 2.4mm		20
		Between Series TNCA to 3.5mm		21
		Between Series TNCA to 3.5mm of equal electrical lengths		23
		Between Series TNCA to BNC		24
		Between Series TNCA to SMA		25
		Between Series TNCA to Custom Design		31
	E	Between Series TNCA to 7mm	E	16
	K	Between Series TNCA to N	K	39
	EE	Between Series TNCA to N Hermetically Sealed	EE	10
		TNCA In-Series Hermetically Sealed		11
	DD	Between Series TNCA to N Push-On and Slide-On	DD	22
		Between Series TNCA Push-On to N		31
		Between Series TNCA Push-On to SMA		34
		Between Series TNCA to TNCA Push-On and Slide-On		26
		Between Series TNC Rev. Sex to N Push-On and Slide-On		45
		Between Series TNCA to F		48
TNC Reverse Sex	Y	TNC Reverse Sex Overview & Specifications	Y	1
		Between Series TNC Reverse Sex to N		4
TNX	Z	TNX Overview & Specifications	Z	1
		TNX In-Series		4
		Between Series TNX to 3.5mm		5
		Between Series TNX to 7mm		6
		Between Series TNX to N		7
		Between Series TNX to SMA		9
Metric Thread 3.5mm, N & SMA	AA	Overview	AA	1
		3.5mm Metric Thread Specifications		2
		Between Series 3.5mm Metric Thread to 3.5mm		4
		Between Series 3.5mm Metric Thread to 2.4mm		5
		N Metric Thread Specifications		6
		Between Series N Metric Thread to N		8
		Between Series N Metric Thread to 3.5mm		9
		Between Series N Metric Thread to SMA		10
		SMA Metric Thread Specifications		12
		Between Series SMA Metric Thread to SMA		14
Adapter Sets	BB	Adapter Sets, Standard and customized	BB	1
NMD	CC	NMD Overview	CC	1
		1.85mm NMD to 1.85mm		2
		2.4mm NMD to 2.4mm		3
		Between Series 2.4mm NMD to 2.92mm and 3.5mm		4
		Between Series 2.4mm NMD to 3.5mm and 7mm		5
		Between Series 2.4mm NMD to N		6
		Between Series 2.92mm NMD to 2.4mm and 2.92mm		7
		In-Series 2.92mm NMD to 2.92mm and Between Series to 3.5mm		8
		Between Series 2.92mm NMD to 7mm and N		9
		Between Series 3.5mm NMD to 2.4mm and 2.92mm and 2.92 In-Series		10
		In-Series 3.5mm NMD to 3.5mm		11
		Between Series 3.5mm NMD to 7mm and N		12
		Between Series 3.5mm NMD to N		13
		Between Series N NMD to 2.4mm and 3.5mm		14
		In-Series N NMD to N		15

Dimensions shown are Inches over Millimeters or vice versa. Standard units have stainless finish (last 2 digits of the P/N are -02). Interfaces are per DIN 47 223, DIN 47 226, IEC 169-4, IEC 169-7, IEC 169-8, IEC 457-2, IEC 60169-5, IEEE 287, MIL-PRF-39012, MIL DTL-24044, MIL DTL-3643,MIL-STD-348B, where applicable

Spectrum Elektrotechnik GmbH
Germany
www.spectrum-et.com
sales@spectrum-et.com
Phone: +49 / 89 / 35 48 04 0
Fax: +49 / 89 / 35 48 04 90

Table of contents

Type	Section	Description	Page	
Push-On & Slide-On	DD	Overview of Push-On & Slide-On Connectors	DD	1
		Procedure for how to use N, TNC & 7/16 Push-On		6
		In-Series 7/16 Push-On & Slide-On		8
		Between Series 7/16 push-On to Type N		11
		In-Series Push-On & Slide On to Type N		14
		Between Series N push-On & Slide-On to TNC		22
		Between Series N push-On & Slide-On to SMA		24
		In-Series Push-On & Slide On of Type TNC		26
		Between Series TNC push-On & Slide-On to N		31
		Between Series TNC push-On & Slide-On to SMA		34
		Procedure for how to use SMA Push-On		38
		In-Series Push-On & Slide On to Type SMA		40
		Between Series TNC Reverse Sex push-On & Slide-On to N		45
		Between Series SMA Reverse Sex push-On & Slide-On to SMA		46
		Between Series F-male to TNC		48
Hermetic Sealed Adapters	EE	Hermetically Sealed Adapters Overview	EE	1
		1.85mm In-Series		4
		2.4mm In-Series		5
		2.92mm In-Series		6
		N In-Series		7
		Between Series N to TNC		10
		TNC In-Series		11
Commercial Adapters	FF	Commercial Adapters Overview	FF	1
		1.4/4.4 Specifications		2
		Between Series 1.4/4.4 to N		4
		1.8/5.6 Specifications		6
		Between Series 1.8/5.6 to BNC		8
		2/5.5 Specifications		10
		Between Series 2/5.5 to 7mm		12
		1 5/8 Specifications		14
		Between Series 1 5/8 to 13/30 and In-Series 1 5/8 Coupler		16
		3 1/8 Specifications		18
		Between Series 3 1/8 to N an d In-Series 3 1/8 Coupler		20
		13/30 Specifications		22
		13/30 In-Series		24
75 Ohms	GG	75 Ohms Adapters Overview	GG	1
		N 75 Ohms Push-On to N female 75 Ohms		2
		Between Series N female 75 Ohms to TNC female 75 Ohms		3
		Between Series 1.6/5.6 to BNC male 75 Ohms		3
Waveguide to Coax Adapters	HH	Overview	HH	1
		Ordering Information		2
		Rectangular End Launched		3
		Rectangular Top Launched		4
		Double Ridge End Launched		6
		Double Ridge Top Launched		7
		Waveguide Flanges Rectangular Waveguides		8
		Waveguide Flanges Double Ridge Waveguides		12
Multiports	II	Multiport Assemblies, Introduction	II	1
		Multiport Connectors and Assemblies Overview		4
		TQ10 Adapter		6
		TQ37 Adapter		8
		Test Adapters		10
Engineering	JJ	Engineering Equations and Data	JJ	1
P/N Index Coax Adapters	KK	Part Number Index of the Coaxial Adapters	KK	1
Representatives	LL	Sales Representatives Europe	LL	1
		Sales Representatives USA		3
		Sales Representatives Asia		4

Dimensions shown are Inches over Millimeters or vice versa. Standard units have stainless finish (last 2 digits of the P/N are -02). Interfaces are per DIN 47 223, DIN 47 226, IEC 169-4, IEC 169-7, IEC 169-8, IEC 457-2, IEC 60169-5, IEC 287, MIL-PRF-39012, MIL DTL-24044, MIL DTL-3643,MIL-STD-348B, where applicable

Spectrum Elektrotechnik GmbH
Germany
www.spectrum-et.com
sales@spectrum-et.com
Phone: +49 / 89 / 35 48 04 0
Fax: +49 / 89 / 35 48 04 90

Phase matched Adapters

Solving problems is our workplace

Spectrum Elektrotechnik GmbH when Quality is needed

Adapters 1.85 mm

1.85mm true Swept Angled Connectors although they look like mitred

In-Series and Between-Series Adapters 1.85mm

If your choice of 1.85 mm Adapter is not shown in this section, please refer to the Table below to determine other possible locations. Should you not find your adapter listed in any section, please consult the factory or your Spectrum Elektrotechnik Area Representative.

1.85 mm	Section	Page
1.85mm Overview & Specifications	A	2
1.85mm In-Series		5
1.85mm In-Series Hermetically Sealed	EE	4
1.85mm NMD to 1.85mm	CC	2
Between Series 1.85mm to 2.4mm	B	10
Between Series 1.85mm to 2.92mm	C	16

Although our catalog incorporates a very comprehensive range of products, due to our program of continuous development, there is no way that it will contain every product we manufacture. Please consult the factory for the product you require.
To improve our Standard Products we reserve the right to make changes. Specifications are therefore subject to change without notice.

Dimensions shown are Inches over Millimeters or vice versa. Standard units have stainless finish (last 2 digits of the P/N are -02). Interfaces are per DIN 47 223, DIN 47 226, IEC 169-4, IEC 169-7, IEC 169-8, IEC 457-2, IEC 60169-5, IEEE 287, MIL-PRF-39012, MIL DTL-24044, MIL DTL-3643,MIL-STD-348B, where applicable

1.85 mm Specifications to IEEE 287

A

The specifications below are general specifications for all 1.85mm connectors. Specific Data for VSWR, Insertion Loss, R.F. leakage, etc., are available from the factory upon request. Specifications in the following table are recommended for any procurement documents or drawings. In the event of any conflict between these specifications and General Specifications IEEE 287, these specifications shall govern. These specifications are subject to change according to the latest revision.

REQUIREMENT	GENERAL SPECIFICATIONS
Standard Materials	STEEL corrosion resistant 1.4305 per DIN EN 10088; ASTM-A582 (303), or 1.4404 (316L) respectively. ALUMINUM AlMg4.5Mn per DIN DIN EN 1706, AlMgSi0.5 per DIN EN 1706, AlMgSi1 per DIN EN 1706 (6061-T6 per QQ-A-225/8). BRASS CuZn39Pb3 per DIN 17660 (QQ-B-626 (ASTM-B124), half hard). COPPER BERYLLIUM 33-25 CuBe2PbH per DIN17666(DIN CEN/TS;DIN SPEC 9700)(QQ-C530). Thermoplast per DIN EN ISO 10350, or PEI per in-house specification respectively for higher temperature applications. SILICONE RUBBER per DIN ISO 3601 (A-A-59588,Class IIB) Gr. 50 - 75. BORIUM NITRITE Dielectric for high power applications per in-house specification
Finish for COPPER BERYLLIUM	Center Contacts shall be gold plated to a minimum thickness of .00005-inch in accordance with ASTM-B-488, Type III, Code C, Class 1.25
STAINLESS STEEL	shall be passivated per ASTM-A967
ALUMINUM	Conductive Parts shall have an iridited finish per MIL-DTL-5541 Other parts, such as Coupling Nuts and Back-Bodies shall be anodized per MIL-A-8625.
BRASS	.00003 inch (0.8 µm) min. gold plating per MIL-DTL-45204, or nickel plating per QQ-N-290, as specified.
VARIOUS	Imoloy .0001 inch (2.5 µm) min. plating, consisting of 55% Copper / 20% Zinc / 25% Tin (on special request).
Design	The design shall be such that the outline dimensions in this catalog are met. In addition, the assembled connector shall meet the interface dimensions.
ELECTRICAL	
Frequency Range	DC - 65.0 GHz min.
Insulation Resistance	Not applicable.
Return Loss (VSWR)	1.03 + 0.005 x f (GHz)
Contact Resistance	The center contact resistance is 2.2 milliohms and the outer contact resistance 0.15 milliohms.
Dielectric Withstanding Voltage	Not applicable.
RF High Potential	Not applicable.
Withstanding Voltage	RF high potential withstanding voltage is is not applicable. Leakage is not applicable.
Shielding effectiveness	100 dB
Insertion Loss	0.4 dB
MECHANICAL	
Connect/Disconnect Life	5000 cycles
Maximum insertion force	0.9 N
Withdrawal force	0.14 N min. ; 0.56 N max.
Coupling torque	0.8 - 1.0 Nm.
Maximum safety torque	1.6 Nm
Depth of insertion	1.25 mm
ENVIRONMENTAL	
Corrosion (Salt Spray)	Specification MIL-STD-202, Method 101, Test Condition B. The salt solution shall be 5%.
Vibration	Specification MIL-STD-202, Method 204, Test Condition B.
Shock	Specification MIL-STD-202, Method 213, Test Condition I.
Thermal Shock	Specification MIL-STD-202, Method 107, Test Condition B, except high temperature shall be + 70°C when the regular Bead is used, and +170° when the high temperature Bead is used.
Moisture Resistance	Specification MIL-STD-202, Method 106. Step 7b (vibration) shall be omitted. Insulation resistance shall be 200 megohms min. within 5 minutes of removal from humidity.
Corona Level	The connector shall not exhibit breakdown (corona) when the applied voltage is 200 volts rms and the altitude is 65,600 feet (20 Km.).

Dimensions shown are Inches over Millimeters or vice versa. Standard units have stainless finish (last 2 digits of the P/N are -02). Interfaces are per DIN 47 223, DIN 47 226, IEC 169-4, IEC 169-7, IEC 169-8, IEC 457-2, IEC 60169-5, IEEE 287, MIL-PRF-39012, MIL DTL-24044, MIL DTL-3643,MIL-STD-348B, where applicable

Spectrum Elektrotechnik GmbH
Germany
www.spectrum-et.com
sales@spectrum-et.com
Phone: +49 / 89 / 35 48 04 0
Fax: +49 / 89 / 35 48 04 90

1.85 mm Interface Specifications to IEEE 287

A

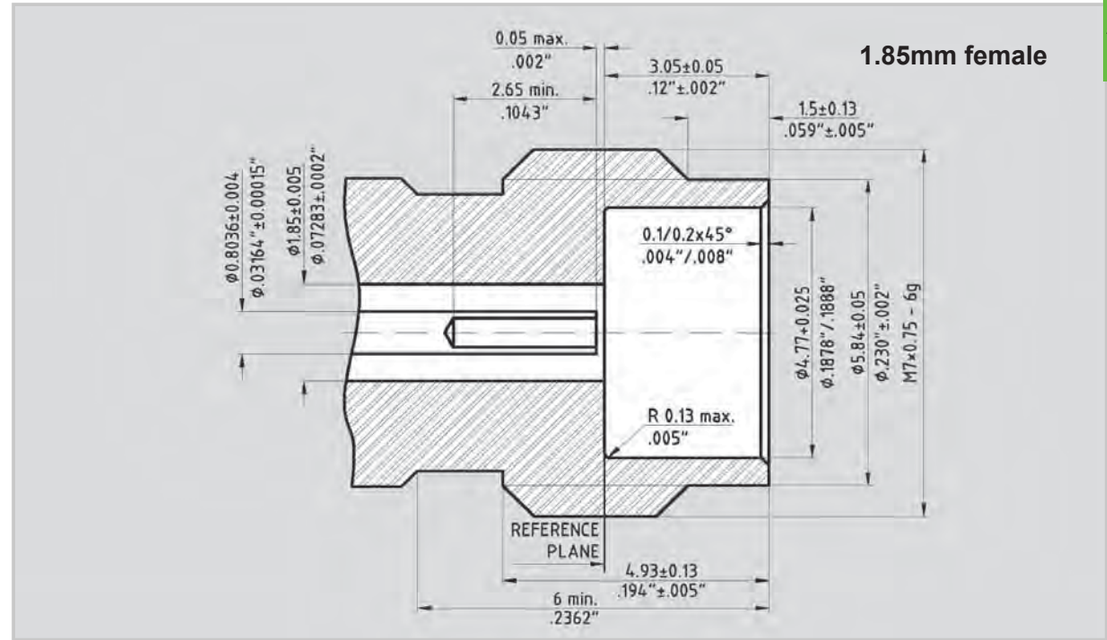

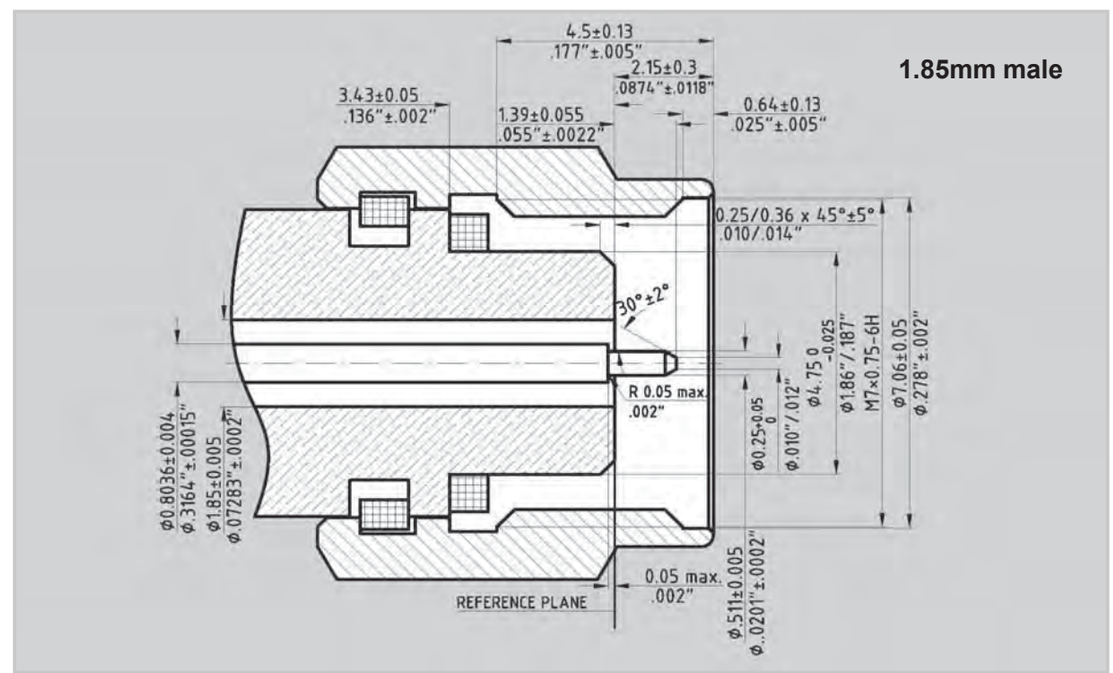

Dimensions shown are Inches over Millimeters or vice versa. Standard units have stainless finish (last 2 digits of the P/N are -02). Interfaces are per DIN 47 223, DIN 47 226, IEC 169-4, IEC 169-7, IEC 169-8, IEC 457-2, IEC 60169-5, IEEE 287, MIL-PRF-39012, MIL DTL-24044, MIL DTL-3643,MIL-STD-348B, where applicable

Spectrum Elektrotechnik GmbH
Germany
www.spectrum-et.com
sales@spectrum-et.com
Phone: +49 / 89 / 35 48 04 0
Fax: +49 / 89 / 35 48 04 90

A

Part - No.	8001-VFVF-02
Connectors	1.85mm-fem. to 1.85mm-fem.
Frequency	DC - 65.0 GHz
VSWR max.	1.03 + 0.005 x f (GHz)

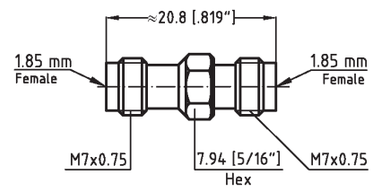

Part - No.	8002-VFVF-02
Connectors	1.85mm-fem. to 1.85mm-fem.
Frequency	DC - 65.0 GHz
VSWR max.	1.03 + 0.005 x f (GHz)

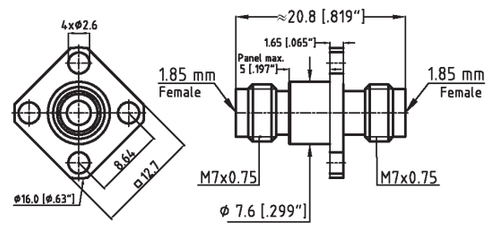

Part - No.	8003-VFVF-02
Connectors	1.85mm-fem. to 1.85mm-fem.
Frequency	DC - 65.0 GHz
VSWR max.	1.03 + 0.005 x f (GHz)

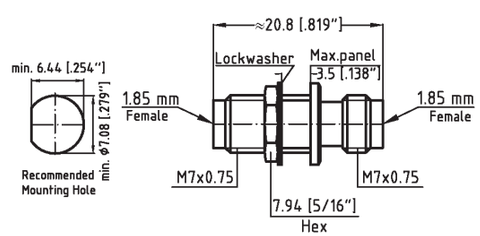

Part - No.	8001-VFVM-02
Connectors	1.85mm-fem. to 1.85mm-male
Frequency	DC - 65.0 GHz
VSWR max.	1.03 + 0.005 x f (GHz)

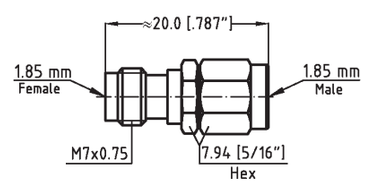

Dimensions shown are Inches over Millimeters or vice versa. Standard units have stainless finish (last 2 digits of the P/N are -02). Interfaces are per DIN 47 223, DIN 47 226, IEC 169-4, IEC 169-7, IEC 169-8, IEC 457-2, IEC 60169-5, IEEE 287, MIL-PRF-39012, MIL DTL-24044, MIL DTL-3643,MIL-STD-348B, where applicable

Spectrum Elektrotechnik GmbH
Germany
www.spectrum-et.com
sales@spectrum-et.com
Phone: +49 / 89 / 35 48 04 0
Fax: +49 / 89 / 35 48 04 90

A

Part - No.	8001-VMVM-02
Connectors	1.85mm-male to 1.85mm-male
Frequency	DC - 65.0 GHz
VSWR max.	1.03 + 0.005 x f (GHz)

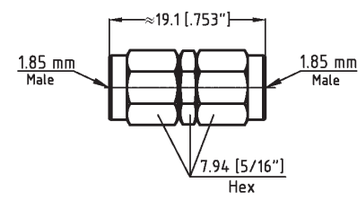

Part - No.	8090-VFVF-02
Connectors	1.85mm-fem. to 1.85mm-fem.
Frequency	DC - 63.0 GHz
VSWR max.	1.03 + 0.007 x f (GHz)

True radius right angle

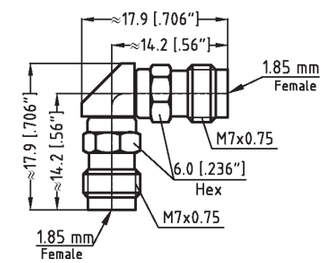

Part - No.	8090-VFVM-02
Connectors	1.85mm-fem. to 1.85mm-male
Frequency	DC - 63.0 GHz
VSWR max.	1.03 + 0.007 x f (GHz)

True radius right angle

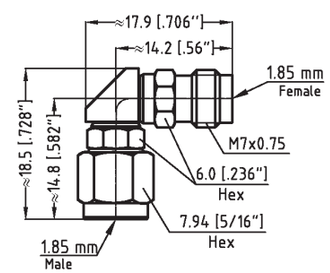

Part - No.	8P90-VFVM-02
Connectors	1.85mm-fem. to 1.85mm-male
Frequency	DC - 63.0 GHz
VSWR max.	1.03 + 0.005 x f (GHz)

Best VSWR

True radius right angle

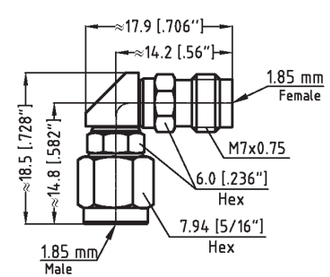

Dimensions shown are Inches over Millimeters or vice versa. Standard units have stainless finish (last 2 digits of the P/N are -02). Interfaces are per DIN 47 223, DIN 47 226, IEC 169-4, IEC 169-7, IEC 169-8, IEC 457-2, IEC 60169-5, IEEE 287, MIL-PRF-39012, MIL DTL-24044, MIL DTL-3643,MIL-STD-348B, where applicable

Spectrum Elektrotechnik GmbH
Germany
www.spectrum-et.com
sales@spectrum-et.com
Phone: +49 / 89 / 35 48 04 0
Fax: +49 / 89 / 35 48 04 90

A

Part - No.	8090-VMVM-02
Connectors	1.85mm-male to 1.85mm-male
Frequency	DC - 63.0 GHz
VSWR max.	1.03 + 0.007 x f (GHz)

True radius right angle

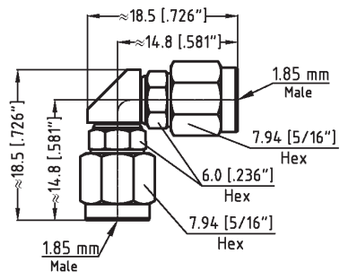

Dimensions shown are Inches over Millimeters or vice versa. Standard units have stainless finish (last 2 digits of the P/N are -02). Interfaces are per DIN 47 223, DIN 47 226, IEC 169-4, IEC 169-7, IEC 169-8, IEC 457-2, IEC 60169-5, IEEE 287, MIL-PRF-39012, MIL DTL-24044, MIL DTL-3643,MIL-STD-348B, where applicable

B

In-Series and Between-Series Adapters 2.4mm

If your choice of 2.4 mm Adapter is not shown in this section, please refer to the Table below to determine other possible locations. Should you not find your adapter listed in any section, please consult the factory or your Spectrum Elektrotechnik Area Representative.

2.4 mm	Section	Page
2.4mm Overview & Specifications	B	1
2.4mm In-Series		4
2.4mm In-Series of equal electrical lengths		8
Between Series 2.4mm to 1.85mm		10
2.4mm In-Series Hermetically Sealed	EE	5
Between Series 2.4mm to 2.92mm	C	17
Between Series 2.4mm to 2.92mm,equal el. lengths		23
Between Series 2.4mm to 3.5mm	D	10
In-Series 2.4mm NMD to 2.4mm	CC	3
Between Series 2.4mm NMD to 2.92mm		4
Between Series 2.4mm NMD to 2.92mm NMD		7
Between Series 2.4mm 2.92mm NMD		7
Between Series 2.4mm NMD to 3.5mm		4
Between Series 2.4mm to 3.5mm NMD		10
Between Series 2.4mm NMD to 7mm		5
Between Series 2.4mm NMD to N		6
Between Series 2.4mm to N NMD		14
Between Series 2.4mm to 7mm	E	5
Between Series 2.4mm to N	K	20
Between Series 2.4mm to SMP	R	12
Between Series 2.4mm to SMP Cal. Kit Units	S	10
Between Series 2.4mm to SMPM, equ. el. lengths	U	6
Between Series 2.4mm to TNCA	X	20
Between Series 2.4mm to 3.5mm, Metric Thread	AA	5

Although our catalog incorporates a very comprehensive range of products, due to our program of continuous development, there is no way that it will contain every product we manufacture. Please consult the factory for the product you require.
To improve our Standard Products we reserve the right to make changes.Specifications are therefore subject to change without notice.

Dimensions shown are Inches over Millimeters or vice versa. Standard units have stainless finish (last 2 digits of the P/N are -02). Interfaces are per DIN 47 223, DIN 47 226, IEC 169-4, IEC 169-7, IEC 169-8, IEC 457-2, IEC 60169-5, IEEE 287, MIL-PRF-39012, MIL DTL-24044, MIL DTL-3643,MIL-STD-348B, where applicable

B

The specifications below are general specifications for all 2.4mm connectors. Specific Data for VSWR, Insertion Loss, R.F. leakage, etc., are available from the factory upon request. Specifications in the following table are recommended for any procurement documents or drawings. In the event of any conflict between these specifications and General Specifications IEEE 287, these specifications shall govern. These specifications are subject to change according to the latest revision.

REQUIREMENT	GENERAL SPECIFICATIONS
Standard Materials	STEEL corrosion resistant 1.4305 per DIN EN 10088; ASTM-A582 (303), or 1.4404 (316L) respectively. ALUMINUM AlMg4.5Mn per DIN DIN EN 1706, AlMgSi0.5 per DIN EN 1706, AlMgSi1 per DIN EN 1706 (6061-T6 per QQ-A-225/8). BRASS CuZn39Pb3 per DIN 17660 (QQ-B-626 (ASTM-B124), half hard). COPPER BERYLLIUM 33-25 CuBe2PbH per DIN17666(DIN CEN/TS;DIN SPEC 9700)(QQ-C530). Thermoplast per DIN EN ISO 10350, respectively PEI per in-house specification for higher temperature applications. SILICONE RUBBER per DIN ISO 3601 (A-A-59588,Class IIB) Gr. 50 - 75. BORIUM NITRITE Dielectric for high power applications per in-house specification
Finish for COPPER BERYLLIUM STAINLESS STEEL ALUMINUM BRASS VARIOUS	Center Contacts shall be gold plated to a minimum thickness of .00005-inch in accordance with ASTM-B-488, Type III, Code C, Class 1.25 shall be passivated per ASTM-A967 Conductive Parts shall have an iridited finish per MIL-DTL-5541 Other parts, such as Coupling Nuts and Back-Bodies shall be anodized per MIL-A-8625. .00003 inch (0.8 µm) min. gold plating per MIL-DTL-45204, or nickel plating per QQ-N-290, as specified. Imoloy .0001 inch (2.5 µm) min. plating, consisting of 55% Copper / 20% Zinc / 25% Tin (on special request).
Design	The design shall be such that the outline dimensions in this catalog are met. In addition, the assembled connector shall meet the interface dimensions.
ELECTRICAL	
Frequency Range	DC - 50.0 GHz min.
Insulation Resistance	Not applicable.
Return Loss (VSWR)	1.03 + .005 f (GHz)
Contact Resistance	The center contact resistance is 3 milliohms and the outer contact resistance 0.15 milliohms.
Dielectric Withstanding Voltage	Not applicable.
RF High Potential	Not applicable.
Withstanding Voltage	RF high potential withstanding voltage is is not applicable. Leakage is not applicable.
Shielding effectiveness	100 dB
Insertion Loss	0.15 dB
MECHANICAL	
Connect/Disconnect Life	5000 cycles
Maximum insertion force	0.9 N
Withdrawal force	0.14 N min. ; 0.56 N max.
Coupling torque	0.8 - 1.0 Nm.
Maximum safety torque	1.6 Nm
Depth of insertion	1.25 mm
ENVIRONMENTAL	
Corrosion (Salt Spray)	Specification MIL-STD-202, Method 101, Test Condition B. The salt solution shall be 5%.
Vibration	Specification MIL-STD-202, Method 204, Test Condition B.
Shock	Specification MIL-STD-202, Method 213, Test Condition I.
Thermal Shock	Specification MIL-STD-202, Method 107, Test Condition B, except high temperature shall be + 70°C when the regular Bead is used, and +170° when the high temperature Bead is used.
Moisture Resistance	Specification MIL-STD-202, Method 106. Step 7b (vibration) shall be omitted. Insulation resistance shall be 200 megohms min. within 5 minutes of removal from humidity.
Corona Level	The connector shall not exhibit breakdown (corona) when the applied voltage is 150 volts rms and the altitude is 70,000 feet.

Dimensions shown are Inches over Millimeters or vice versa. Standard units have stainless finish (last 2 digits of the P/N are -02). Interfaces are per DIN 47 223, DIN 47 226, IEC 169-4, IEC 169-7, IEC 169-8, IEC 457-2, IEC 60169-5, IEEE 287, MIL-PRF-39012, MIL DTL-24044, MIL DTL-3643,MIL-STD-348B, where applicable

Spectrum Elektrotechnik GmbH
Germany
www.spectrum-et.com
sales@spectrum-et.com
Phone: +49 / 89 / 35 48 04 0
Fax: +49 / 89 / 35 48 04 90

B

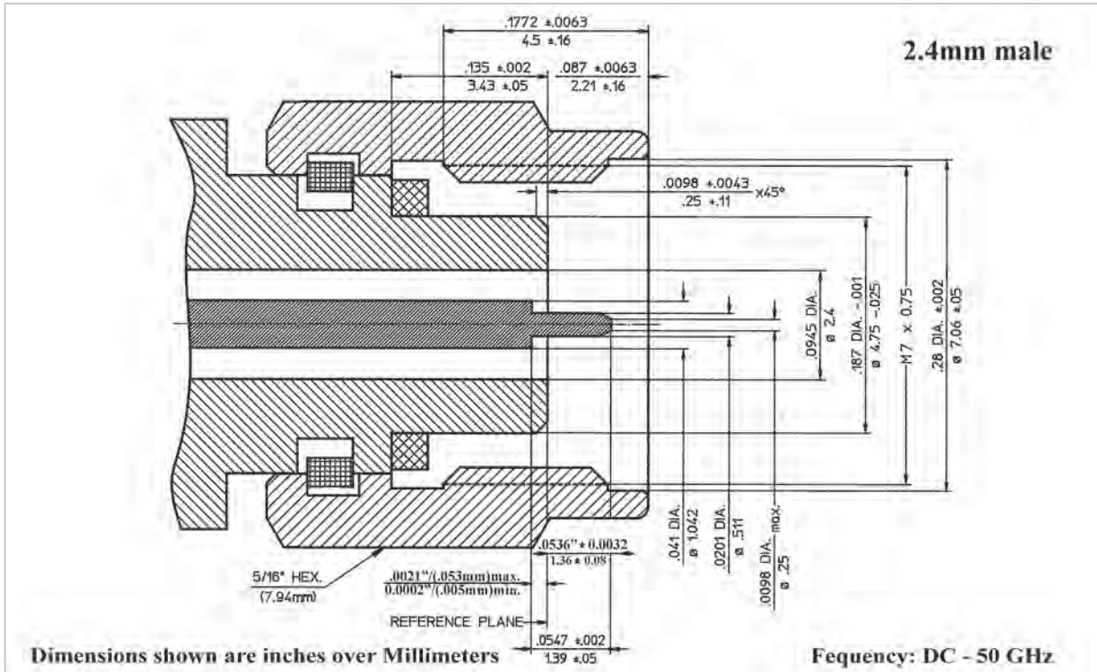

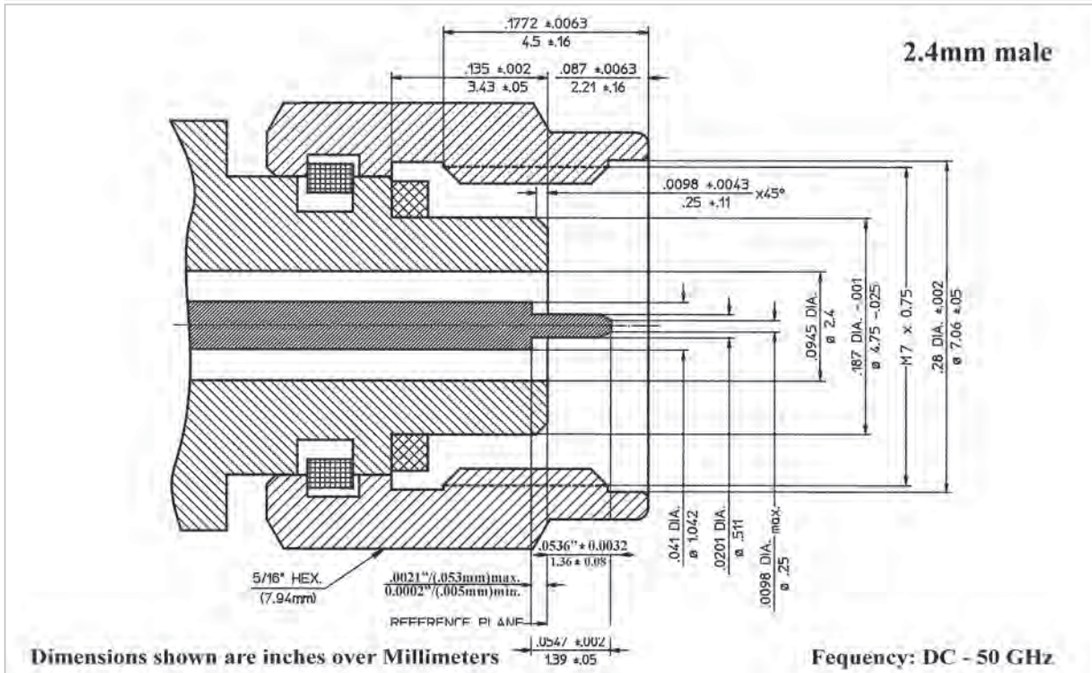

Dimensions shown are Inches over Millimeters or vice versa. Standard units have stainless finish (last 2 digits of the P/N are -02). Interfaces are per DIN 47 223, DIN 47 226, IEC 169-4, IEC 169-7, IEC 169-8, IEC 457-2, IEC 60169-5, IEEE 287, MIL-PRF-39012, MIL DTL-24044, MIL DTL-3643,MIL-STD-348B, where applicable

Spectrum Elektrotechnik GmbH
Germany
www.spectrum-et.com
sales@spectrum-et.com
Phone: +49 / 89 / 35 48 04 0
Fax: +49 / 89 / 35 48 04 90

B

Part - No.	8001-HFHF-02
Connectors	2.4 mm-fem. to 2.4 mm-fem.
Frequency	DC - 50.0 GHz
VSWR max.	1.03 + 0.005 x f(GHz)

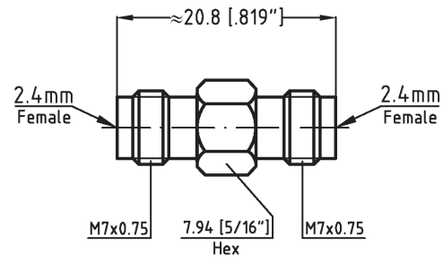

Part - No.	8U01-HFHF-02
Connectors	2.4 mm-fem. to 2.4 mm-fem.
Frequency	DC - 50.0 GHz
VSWR max.	1.03 + 0.005 x f(GHz)
	Higher temperature applications

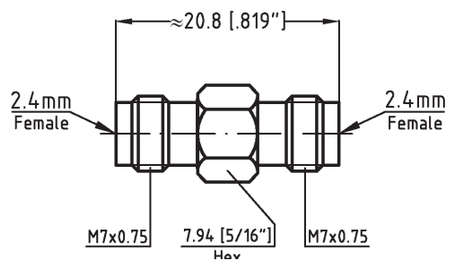

Part - No.	8002-HFHF-02
Connectors	2.4 mm-fem. to 2.4 mm-fem.
Frequency	DC - 50.0 GHz
VSWR max.	1.03 + 0.005 x f(GHz)

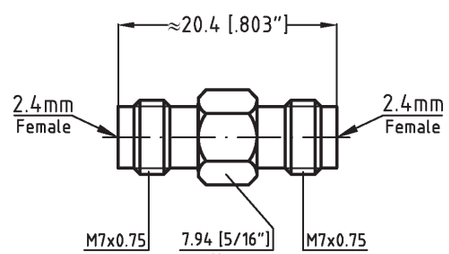

Part - No.	8003-HFHF-02
Connectors	2.4 mm-fem. to 2.4 mm-fem.
Frequency	DC - 50.0 GHz
VSWR max.	1.03 + 0.005 x f(GHz)

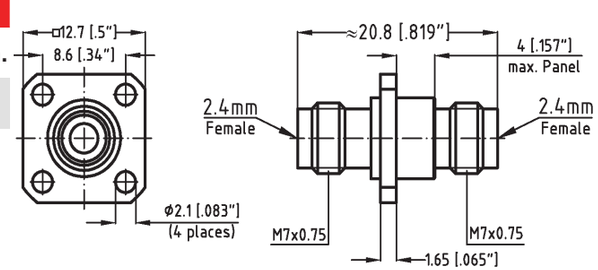

Dimensions shown are Inches over Millimeters or vice versa. Standard units have stainless finish (last 2 digits of the P/N are -02). Interfaces are per DIN 47 223, DIN 47 226, IEC 169-4, IEC 169-7, IEC 169-8, IEC 457-2, IEC 60169-5, IEEE 287, MIL-PRF-39012, MIL DTL-24044, MIL DTL-3643,MIL-STD-348B, where applicable

Spectrum Elektrotechnik GmbH
Germany
www.spectrum-et.com
sales@spectrum-et.com
Phone: +49 / 89 / 35 48 04 0
Fax: +49 / 89 / 35 48 04 90

B

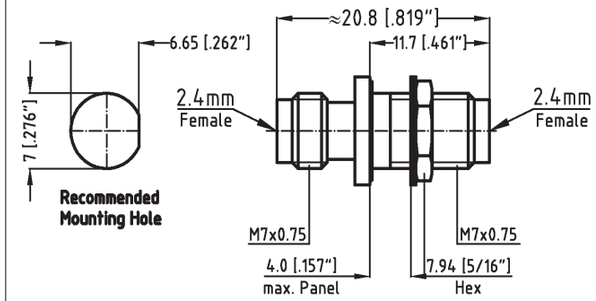

Part - No.	8004-HFHF-02
Connectors	2.4mm-fem. to 2.4mm-fem.
Frequency	DC - 50.0 GHz
VSWR max.	1.03 + 0.005 x f(GHz)

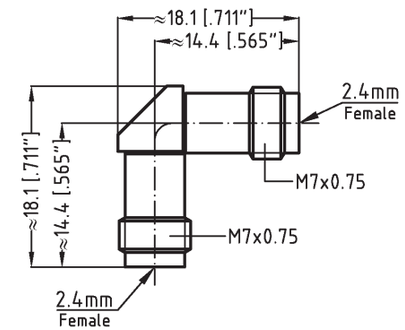

Part - No.	8090-HFHF-02
Connectors	2.4mm-fem. to 2.4mm-fem.
Frequency	DC - 50.0 GHz
VSWR max.	1.03 + 0.007 x f(GHz)

True radius right angle

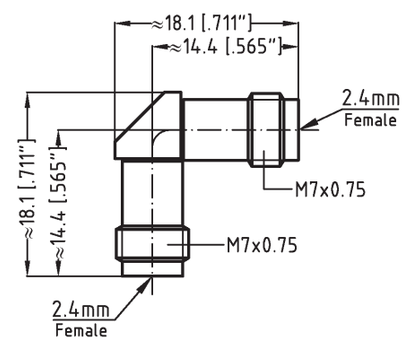

Part - No.	8P90-HFHF-02
Connectors	2.4mm-fem. to 2.4mm-fem.
Frequency	DC - 50.0 GHz
VSWR max.	1.03 + 0.005 x f(GHz)
Best VSWR	

True radius right angle

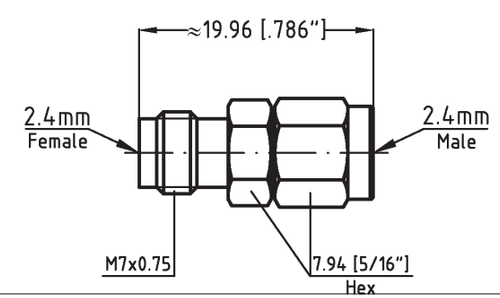

Part - No.	8001-HFHM-02
Connectors	2.4mm-fem. to 2.4mm-male
Frequency	DC - 50.0 GHz
VSWR max.	1.03 + 0.005 x f(GHz)

Dimensions shown are Inches over Millimeters or vice versa. Standard units have stainless finish (last 2 digits of the P/N are -02). Interfaces are per DIN 47 223, DIN 47 226, IEC 169-4, IEC 169-7, IEC 169-8, IEC 457-2, IEC 60169-5, IEEE 287, MIL-PRF-39012, MIL DTL-24044, MIL DTL-3643,MIL-STD-348B, where applicable

Spectrum Elektrotechnik GmbH
Germany
www.spectrum-et.com
sales@spectrum-et.com
Phone: +49 / 89 / 35 48 04 0
Fax: +49 / 89 / 35 48 04 90

B

Part - No.	8U01-HFHM-02
Connectors	2.4mm-fem. to 2.4mm-male
Frequency	DC - 40.0 GHz
VSWR max.	1.03 + 0.005 x f(GHz)

Higher temperature applications

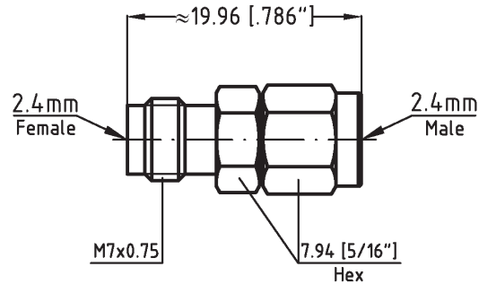

Part - No.	8090-HFHM-02
Connectors	2.4mm-fem. to 2.4mm-male
Frequency	DC - 50.0 GHz
VSWR max.	1.03 + 0.006 x f(GHz)

True radius right angle

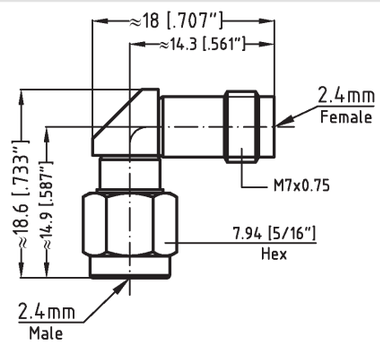

Part - No.	8U90-HFHM-02
Connectors	2.4mm-fem. to 2.4mm-male
Frequency	DC - 40.0 GHz
VSWR max.	1.03 + 0.006 x f(GHz)

Higher temperature applications

True radius right angle

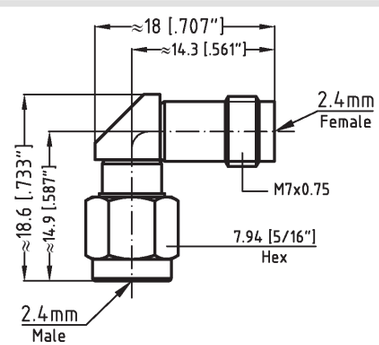

Part - No.	8P90-HFHM-02
Connectors	2.4mm-fem. to 2.4mm-male
Frequency	DC - 50.0 GHz
VSWR max.	1.03 + 0.005 x f(GHz)

Best VSWR

True radius right angle

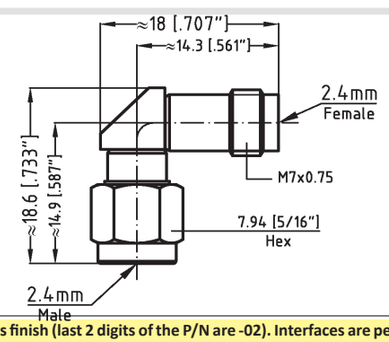

Dimensions shown are Inches over Millimeters or vice versa. Standard units have stainless finish (last 2 digits of the P/N are -02). Interfaces are per DIN 47 223, DIN 47 226, IEC 169-4, IEC 169-7, IEC 169-8, IEC 457-2, IEC 60169-5, IEEE 287, MIL-PRF-39012, MIL DTL-24044, MIL DTL-3643,MIL-STD-348B, where applicable

Spectrum Elektrotechnik GmbH
Germany
www.spectrum-et.com
sales@spectrum-et.com
Phone: +49 / 89 / 35 48 04 0
Fax: +49 / 89 / 35 48 04 90

B

Part - No.	8001-HMHM-02
Connectors	2.4mm-male to 2.4mm-male
Frequency	DC - 50.0 GHz
VSWR max.	1.03 + 0.005 x f(GHz)

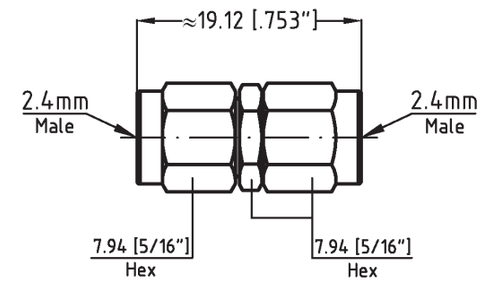

Part - No.	8U01-HMHM-02
Connectors	2.4mm-male to 2.4mm-male
Frequency	DC - 40.0 GHz
VSWR max.	1.03 + 0.005 x f(GHz)

Higher temperature applications

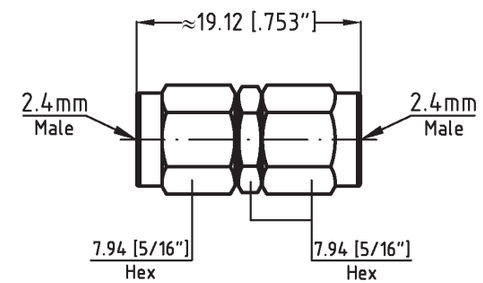

Part - No.	8090-HMHM-02
Connectors	2.4mm-male to 2.4mm-male
Frequency	DC - 50.0 GHz
VSWR max.	1.03 + 0.006 x f(GHz)

True radius right angle

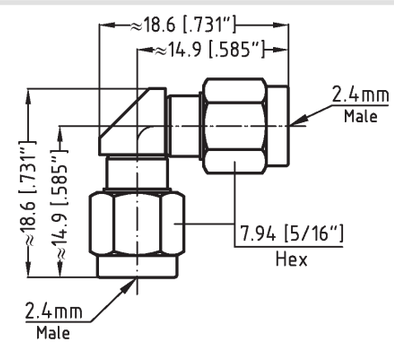

Part - No.	8P90-HMHM-02
Connectors	2.4mm-male to 2.4mm-male
Frequency	DC - 50.0 GHz
VSWR max.	1.03 + 0.005 x f(GHz)

Best VSWR

True radius right angle

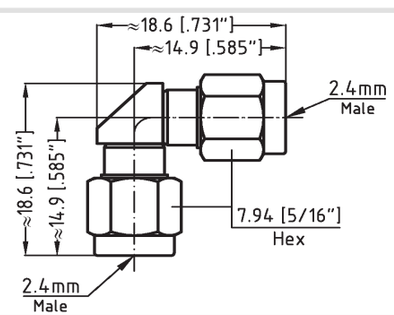

Dimensions shown are Inches over Millimeters or vice versa. Standard units have stainless finish (last 2 digits of the P/N are -02). Interfaces are per DIN 47 223, DIN 47 226, IEC 169-4, IEC 169-7, IEC 169-8, IEC 457-2, IEC 60169-5, IEEE 287, MIL-PRF-39012, MIL DTL-24044, MIL DTL-3643,MIL-STD-348B, where applicable

Spectrum Elektrotechnik GmbH
Germany
www.spectrum-et.com
sales@spectrum-et.com
Phone: +49 / 89 / 35 48 04 0
Fax: +49 / 89 / 35 48 04 90

B

Part - No.	8801-HFHF-02
Connectors	2.4mm-fem. to 2.4mm-fem.
Frequency	DC - 50.0 GHz
VSWR max.	1.03 + 0.005 x f(GHz)

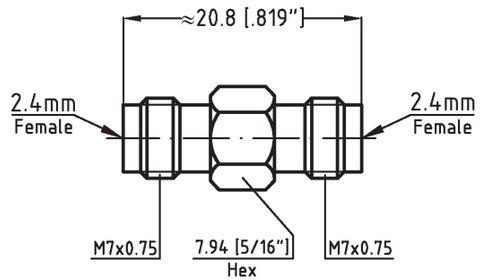

Part - No.	8801-HFHM-02
Connectors	2.4mm-fem. to 2.4mm-male
Frequency	DC - 50.0 GHz
VSWR max.	1.03 + 0.005 x f(GHz)

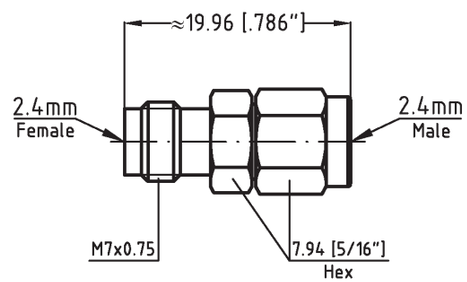

Part - No.	8801-HMHM-02
Connectors	2.4mm-male to 2.4mm-male
Frequency	DC - 50.0 GHz
VSWR max.	1.03 + 0.005 x f(GHz)

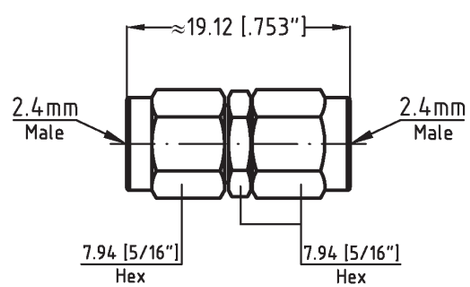

You do not find the Adapter you need for an application? You need technical support? You need price and delivery information? Please contact your nearest Spectrum Representative, or please contact us direct.

Telephone: +49-89-3548-040 Facsimile: +49-89-3548-0490
e-mail: sales@spectrum-et.com www.spectrum-et.com

Dimensions shown are Inches over Millimeters or vice versa. Standard units have stainless finish (last 2 digits of the P/N are -02). Interfaces are per DIN 47 223, DIN 47 226, IEC 169-4, IEC 169-7, IEC 169-8, IEC 457-2, IEC 60169-5, IEEE 287, MIL-PRF-39012, MIL DTL-24044, MIL DTL-3643,MIL-STD-348B, where applicable

B

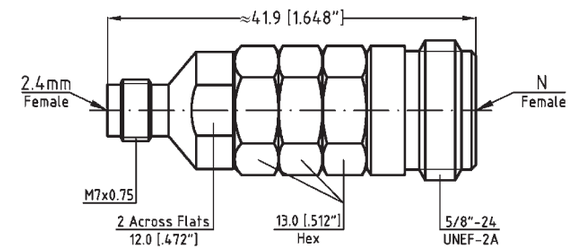

Part - No.	88U1-HF61-02
Connectors	2.4 m-fem. to N-fem.
Frequency	DC - 18.0 GHz
VSWR max.	1.03 + 0.005 x f(GHz)

Higher temperature applications

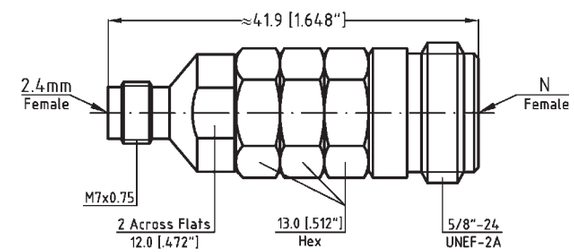

Part - No.	8801-HF61-02
Connectors	2.4mm-fem. to N-fem.
Frequency	DC - 18.0 GHz
VSWR max.	1.03 + 0.005 x f(GHz)

You need something different, or you need technical assistance? Please give us a call for immediate support from Marketing and/or from Engineering.
www.spectrum.et.com
+49-89-3548-040

Dimensions shown are Inches over Millimeters or vice versa. Standard units have stainless finish (last 2 digits of the P/N are -02). Interfaces are per DIN 47 223, DIN 47 226, IEC 169-4, IEC 169-7, IEC 169-8, IEC 457-2, IEC 60169-5, IEEE 287, MIL-PRF-39012, MIL DTL-24044, MIL DTL-3643,MIL-STD-348B, where applicable

B

Part - No.	8001-HFVF-02
Connectors	2.4mm-fem. to 1.85mm-female
Frequency	DC - 50.0 GHz
VSWR max.	1.03 + 0.005 x f (GHz)

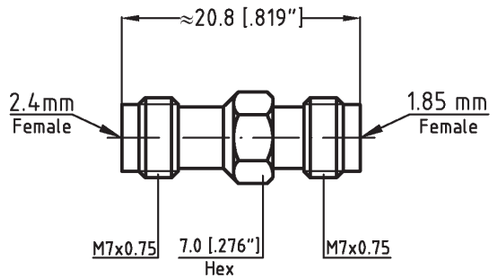

Part - No.	8001-HFVM-02
Connectors	2.4mm-fem. to 1.85mm-male
Frequency	DC - 50.0 GHz
VSWR max.	1.03 + 0.005 x f (GHz)

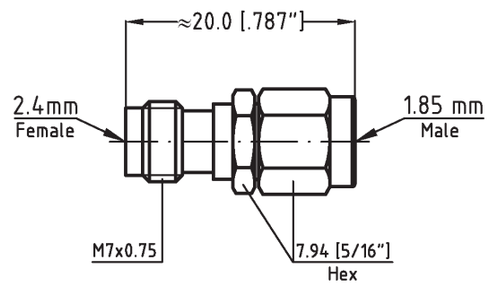

Part - No.	8001-HMVF-02
Connectors	2.4mm-male to 1.85mm-fem.
Frequency	DC - 50.0 GHz
VSWR max.	1.03 + 0.005 x f (GHz)

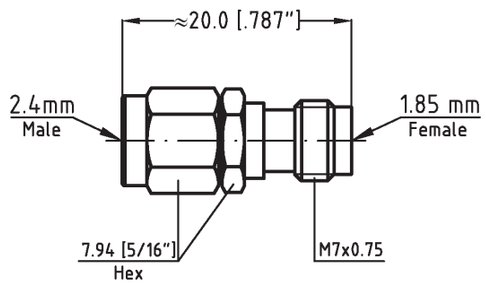

Part - No.	8001-HMVM-02
Connectors	2.4mm-male to 1.85mm-male
Frequency	DC - 50.0 GHz
VSWR max.	1.03 + 0.005 x f (GHz)

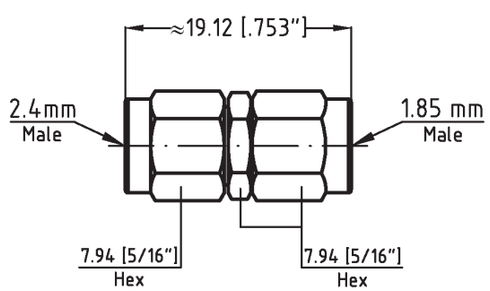

Dimensions shown are Inches over Millimeters or vice versa. Standard units have stainless finish (last 2 digits of the P/N are -02). Interfaces are per DIN 47 223, DIN 47 226, IEC 169-4, IEC 169-7, IEC 169-8, IEC 457-2, IEC 60169-5, IEEE 287, MIL-PRF-39012, MIL DTL-24044, MIL DTL-3643,MIL-STD-348B, where applicable

Spectrum Elektrotechnik GmbH
Germany
www.spectrum-et.com
sales@spectrum-et.com
Phone: +49 / 89 / 35 48 04 0
Fax: +49 / 89 / 35 48 04 90

In-Series and Between-Series Adapters 2.92mm

If your choice of 2.92 mm Adapter is not shown in this section, please refer to the Table below to determine other possible locations. Should you not find your adapter listed in any section, please consult the factory or your Spectrum Elektrotechnik Area Representative.

C

2.92 mm	Section	Page
2.92mm Overview & Specifications	C	1
2.92mm In-Series		4
2.92mm In-Series of equal electrical length		15
Between Series 2.92mm to 1.85mm		16
Between Series 2.92mm to 1.85mm and to 2.4mm		17
Between Series 2.92mm to 2.4mm of equal el. length		23
2.92mm In-Series Hermetically Sealed	EE	6
Between Series 2.92mm to 3.5mm	D	16
Between Series 2.92mm to 7mm	E	6
Between Series 2.92mm to N	K	22
Between Series 2.92mm to N with Metric Thread	AA	9
Between Series 2.92mm to SMP	R	12
Between Series 2.92mm to SMP Calibration Kit Units	S	15
Between Series 2.92mm to SMP LRL Cal. Kit Units	T	7
Between Series 2.92mm to SMPM	U	8
Between Series 2.92mm to SSMA	V	4
Between Series 2.92mm to 2.4mm NMD	CC	4
Between Series 3.5mm to 2.92mm NMD		8
Between Series 2.92mm NMD to 2.4mm		7
Between Series 2.92mm NMD to 2.4mm NMD		4
In-Series 2.92mm NMD to 2.92mm		7
Between Series 2.92mm NMD to 3.5mm		8
Between Series 2.92mm to 3.5mm NMD		10
Between Series 2.92mm NMD to 7mm		9
Between Series 2.92mm NMD to N		9

Although our catalog incorporates a very comprehensive range of products, due to our program of continuous development, there is no way that it will contain every product we manufacture. Please consult the factory for the product you require.
To improve our Standard Products we reserve the right to make changes. Specifications are therefore subject to change without notice.

Dimensions shown are Inches over Millimeters or vice versa. Standard units have stainless finish (last 2 digits of the P/N are -02). Interfaces are per DIN 47 223, DIN 47 226, IEC 169-4, IEC 169-7, IEC 169-8, IEC 457-2, IEC 60169-5, IEEE 287, MIL-PRF-39012, MIL DTL-24044, MIL DTL-3643,MIL-STD-348B, where applicable

Spectrum Elektrotechnik GmbH
Germany
www.spectrum-et.com
sales@spectrum-et.com
Phone: +49 / 89 / 35 48 04 0
Fax: +49 / 89 / 35 48 04 90

C

The specifications below are general specifications for all 2.92mm connectors. Specific Data for VSWR, Insertion Loss, R.F. leakage, etc., are available from the factory upon request. Specifications in the following table are recommended for any procurement documents or drawings. In the event of any conflict between these specifications and General Specifications IEEE 287, these specifications shall govern. These specifications are subject to change according to the latest revision.

REQUIREMENT	GENERAL SPECIFICATIONS
Standard Materials	STEEL corrosion resistant 1.4305 per DIN EN 10088; ASTM-A582 (303), or 1.4404 (316L) respectively. ALUMINUM AlMg4.5Mn per DIN DIN EN 1706, AlMgSi0.5 per DIN EN 1706, AlMgSi1 per DIN EN 1706 (6061-T6 per QQ-A-225/8). BRASS CuZn39Pb3 per DIN 17660 (QQ-B-626 (ASTM-B124), half hard). COPPER BERYLLIUM 33-25 CuBe2PbH per DIN17666(DIN CEN/TS;DIN SPEC 9700)(QQ-C530). Thermoplast per DIN EN ISO 10350, respectively PEI per in-house specification for higher temperature applications. SILICONE RUBBER per DIN ISO 3601 (A-A-59588,Class IIB) Gr. 50 - 75. BORIUM NITRITE Dielectric for high power applications per in-house specification
Finish for COPPER BERYLLIUM STAINLESS STEEL ALUMINUM BRASS VARIOUS	Center Contacts shall be gold plated to a minimum thickness of .00005-inch in accordance with ASTM-B-488, Type III, Code C, Class 1.25 shall be passivated per ASTM-A967 Conductive Parts shall have an iridited finish per MIL-DTL-5541 Other parts, such as Coupling Nuts and Back-Bodies shall be anodized per MIL-A-8625. .00003 inch (0.8 µm) min. gold plating per MIL-DTL-45204, or nickel plating per QQ-N-290, as specified. Imoloy .0001 inch (2.5 µm) min. plating, consisting of 55% Copper / 20% Zinc / 25% Tin (on special request).
Design	The design shall be such that the outline dimensions in this catalog are met. In addition, the assembled connector shall meet the interface dimensions.
ELECTRICAL	
Frequency Range	DC - 40.0 GHz min.
Insulation Resistance	Insulation resistance is not applicable
Voltage Standing Wave Ratio (VSWR)	1.03 + 0.005 x f (GHz)
Contact Resistance	The center contact resistance drop shall not exceed 0.75 milliohms) and the outer contact resistance drop shall not exceed 0.13 milliohms.
Dielectric Withstanding Voltage	The magnitude of the test voltage shall be 1,000 volts rms at sea level.
RF High Potential Withstanding Voltage	RF high potential withstanding voltage not applicable. Leakage is not applicable.
RF Leakage	- (100 - f (GHz)) dB
Insertion Loss	(.025 SQT(f(GHz))) dB(IEEE 287: 0.3dB)
MECHANICAL	
Connect/Disconnect Life	2000 cycles
Maximum insertion force	4.5 N
Withdrawal force	0.4 N min. ; 3.3 N max.
Coupling torque	0.6 - 1.0 Nm.
Maximum safety torque	1.8 Nm
Depth of insertion	1.5 mm
ENVIRONMENTAL	
Corrosion (Salt Spray)	Specification MIL-STD-202, Method 101, Test Condition B. The salt solution shall be 5%.
Vibration	Specification MIL-STD-202, Method 204, Test Condition B.
Shock	Specification MIL-STD-202, Method 213, Test Condition I.
Thermal Shock	Specification MIL-STD-202, Method 107, Test Condition B, except high temperature shall be + 70°C when the regular Bead is used, and +170° when the high temperature Bead is used.
Moisture Resistance	Specification MIL-STD-202, Method 106. Step 7b (vibration) shall be omitted. Insulation resistance shall be 200 megohms min. within 5 minutes of removal from humidity.
Corona Level	Corona Level is not applicable.

Dimensions shown are Inches over Millimeters or vice versa. Standard units have stainless finish (last 2 digits of the P/N are -02). Interfaces are per DIN 47 223, DIN 47 226, IEC 169-4, IEC 169-7, IEC 169-8, IEC 457-2, IEC 60169-5, IEEE 287, MIL-PRF-39012, MIL DTL-24044, MIL DTL-3643,MIL-STD-348B, where applicable

Spectrum Elektrotechnik GmbH
Germany
www.spectrum-et.com
sales@spectrum-et.com
Phone: +49 / 89 / 35 48 04 0
Fax: +49 / 89 / 35 48 04 90

C

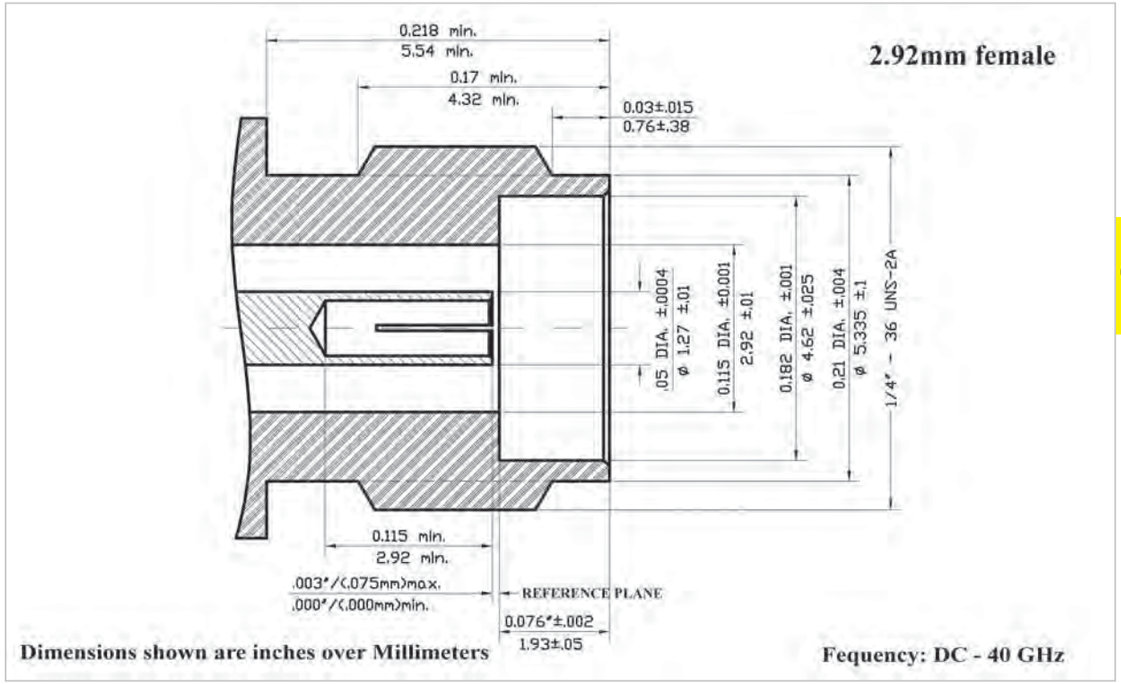

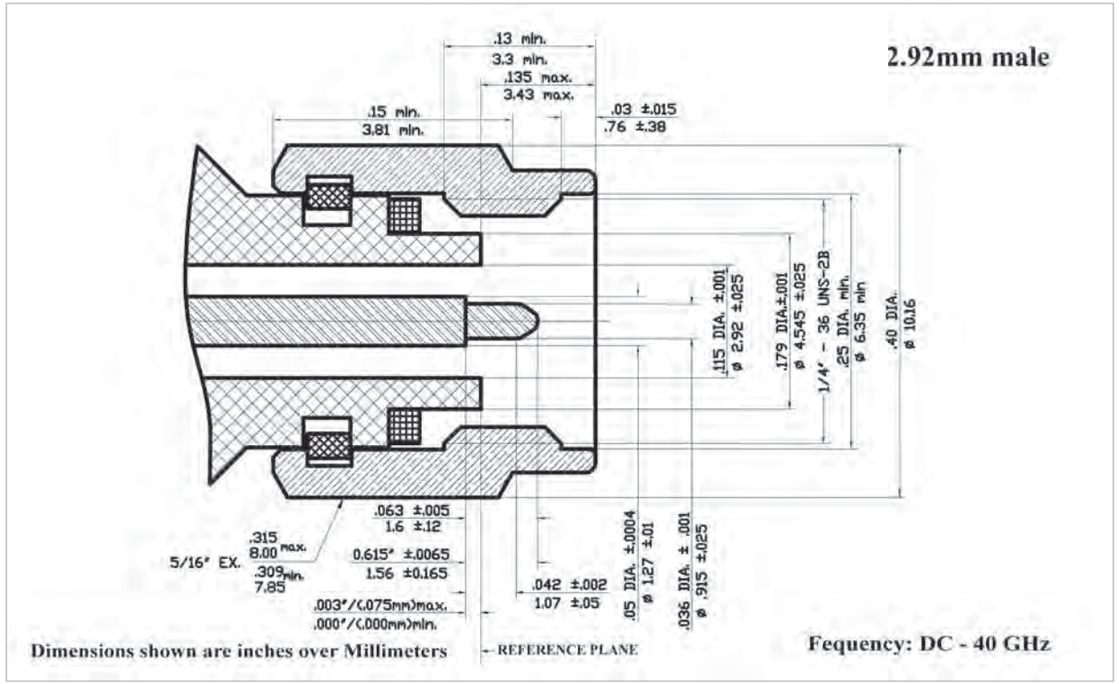

Dimensions shown are Inches over Millimeters or vice versa. Standard units have stainless finish (last 2 digits of the P/N are -02). Interfaces are per DIN 47 223, DIN 47 226, IEC 169-4, IEC 169-7, IEC 169-8, IEC 457-2, IEC 60169-5, IEEE 287, MIL-PRF-39012, MIL DTL-24044, MIL DTL-3643,MIL-STD-348B, where applicable

Spectrum Elektrotechnik GmbH
Germany
www.spectrum-et.com
sales@spectrum-et.com
Phone: +49 / 89 / 35 48 04 0
Fax: +49 / 89 / 35 48 04 90

C

Part - No.	8001-KFKF-02
Connectors	2.92mm-fem. to 2.92mm-fem.
Frequency	DC - 40.0 GHz
VSWR max.	1.03 + 0.005 f (GHz)

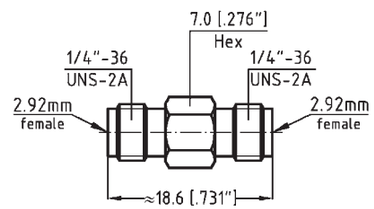

Part - No.	8U01-KFKF-02
Connectors	2.92mm-fem. to 2.92mm-fem.
Frequency	DC - 40.0 GHz
VSWR max.	1.03 + 0.005 f (GHz)

Higher temperature applications

8U0V-KFKF-02: unit has venting holes

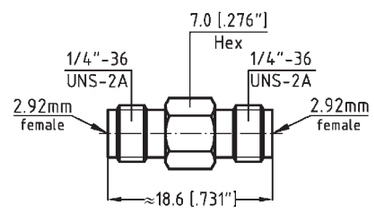

Part - No.	8P01-KFKF-02
Connectors	2.92mm-fem. to 2.92mm-fem.
Frequency	DC - 40.0 GHz
VSWR max.	1.03 + 0.004 f (GHz)

Best VSWR

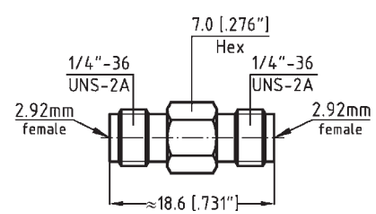

Part - No.	8PU1-KFKF-02
Connectors	2.92mm-fem. to 2.92mm-fem.
Frequency	DC - 40.0 GHz
VSWR max.	1.03 + 0.004 f (GHz)

Best VSWR

Higher temperature applications

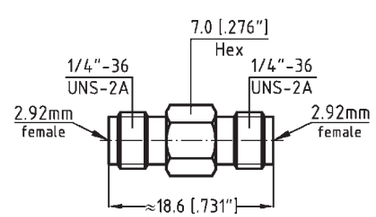

Dimensions shown are Inches over Millimeters or vice versa. Standard units have stainless finish (last 2 digits of the P/N are -02). Interfaces are per DIN 47 223, DIN 47 226, IEC 169-4, IEC 169-7, IEC 169-8, IEC 457-2, IEC 60169-5, IEEE 287, MIL-PRF-39012, MIL DTL-24044, MIL DTL-3643,MIL-STD-348B, where applicable

Spectrum Elektrotechnik GmbH
Germany
www.spectrum-et.com
sales@spectrum-et.com
Phone: +49 / 89 / 35 48 04 0
Fax: +49 / 89 / 35 48 04 90

C

Part - No.	8002-KFKF-02
Connectors	2.92mm-fem. to 2.92mm-fem.
Frequency	DC - 40.0 GHz
VSWR max.	1.03 + 0.005 f (GHz)

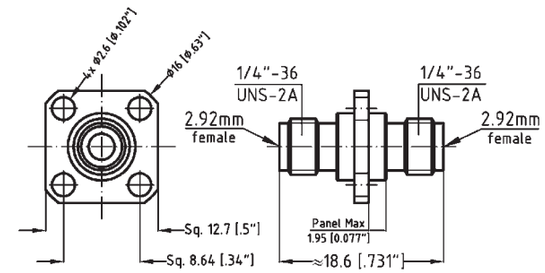

Part - No.	8U02-KFKF-02
Connectors	2.92mm-fem. to 2.92mm-fem.
Frequency	DC - 40.0 GHz
VSWR max.	1.03 + 0.005 f (GHz)

Higher temperature applications

800V-KFKF-U2 unit has venting holes

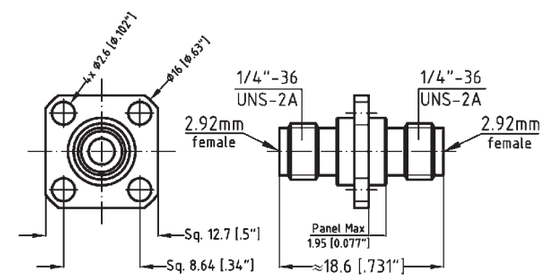

Part - No.	80SV-KFKF-U2
Connectors	2.92mm-fem. to 2.92mm-fem.
Frequency	DC - 40.0 GHz
VSWR max.	1.03 + 0.005 f (GHz)

commercial unit with venting holes

Higher temperature applications

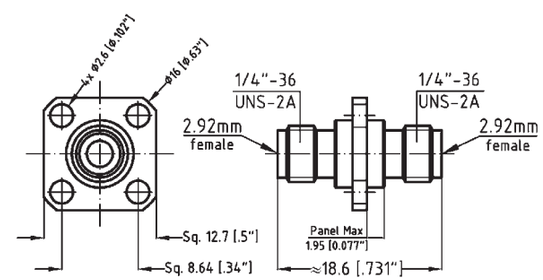

Part - No.	8003-KFKF-02
Connectors	2.92mm-fem. to 2.92mm-fem.
Frequency	DC - 40.0 GHz
VSWR max.	1.03 + 0.005 f (GHz)

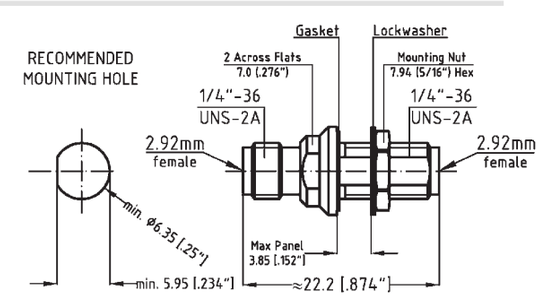

Dimensions shown are Inches over Millimeters or vice versa. Standard units have stainless finish (last 2 digits of the P/N are -02). Interfaces are per DIN 47 223, DIN 47 226, IEC 169-4, IEC 169-7, IEC 169-8, IEC 457-2, IEC 60169-5, IEEE 287, MIL-PRF-39012, MIL DTL-24044, MIL DTL-3643,MIL-STD-348B, where applicable

Spectrum Elektrotechnik GmbH
Germany
www.spectrum-et.com
sales@spectrum-et.com
Phone: +49 / 89 / 35 48 04 0
Fax: +49 / 89 / 35 48 04 90

C

Part - No.	8003-KFKF-00
Connectors	2.92mm-fem. to 2.92mm-fem.
Frequency	DC - 40.0 GHz
VSWR max.	1.03 + 0.005 f (GHz)

Stainless steel body is gold plated

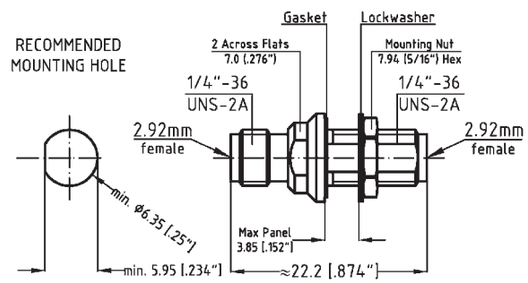

Part - No.	8U03-KFKF-02
Connectors	2.92mm-fem. to 2.92mm-fem.
Frequency	DC - 65.0 GHz
VSWR max.	1.03 + 0.005 f (GHz)

Higher temperature applications

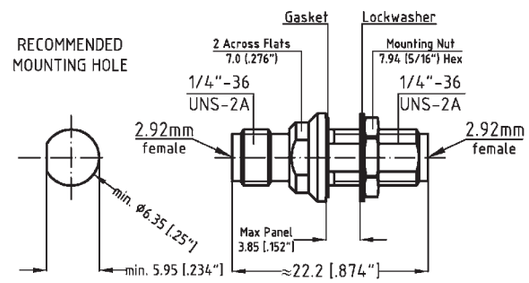

Part - No.	802V-KFKF-02
Connectors	2.92mm-fem. to 2.92mm-fem.
Frequency	DC - 40.0 GHz
VSWR max.	1.03 + 0.005 f (GHz)

Venting holes

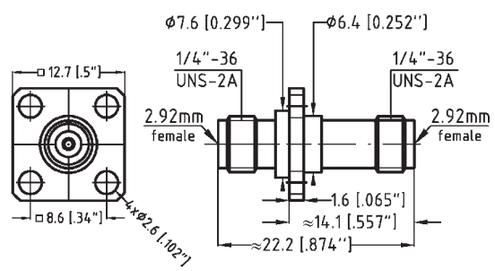

Part - No.	802V-KFKF-U2
Connectors	2.92mm-fem. to 2.92mm-fem.
Frequency	DC - 40.0 GHz
VSWR max.	1.03 + 0.005 f (GHz)

Venting holes
Higher temperature applications

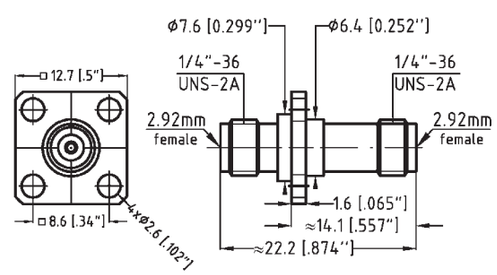

Dimensions shown are Inches over Millimeters or vice versa. Standard units have stainless finish (last 2 digits of the P/N are -02). Interfaces are per DIN 47 223, DIN 47 226, IEC 169-4, IEC 169-7, IEC 169-8, IEC 457-2, IEC 60169-5, IEEE 287, MIL-PRF-39012, MIL DTL-24044, MIL DTL-3643,MIL-STD-348B, where applicable

Spectrum Elektrotechnik GmbH
Germany
www.spectrum-et.com
sales@spectrum-et.com
Phone: +49 / 89 / 35 48 04 0
Fax: +49 / 89 / 35 48 04 90

C

Part - No.	800P-KFKF-02
Connectors	2.92mm-fem. to 2.92mm-fem.
Frequency	DC - 40.0 GHz
VSWR max.	1.03 + 0.005 f (GHz)

800P-KFKF-02 Pressurized, wire holes in the nut
803P-KFKF-02 Pressurized, wire holes in the body flange, not in the nut

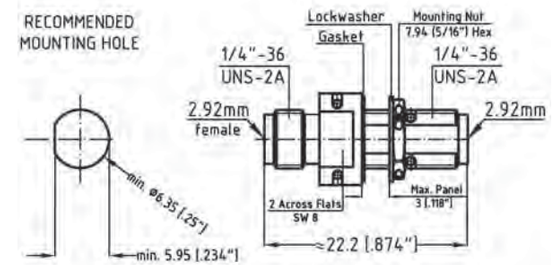

Part - No.	801P-KFKF-02
Connectors	2.92mm-fem. to 2.92mm-fem.
Frequency	DC - 40.0 GHz
VSWR max.	1.03 + 0.004 f (GHz)

Best VSWR
Pressurized, wire holes in the nut

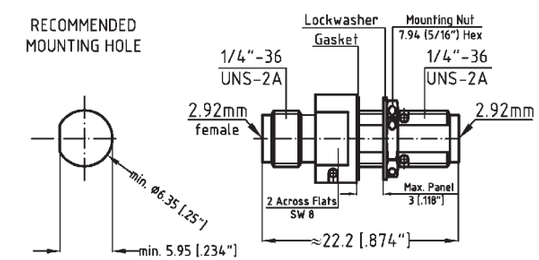

Part - No.	8004-KFKF-02
Connectors	2.92mm-fem. to 2.92mm-fem.
Frequency	DC - 40.0 GHz
VSWR max.	1.03 + 0.005 f (GHz)

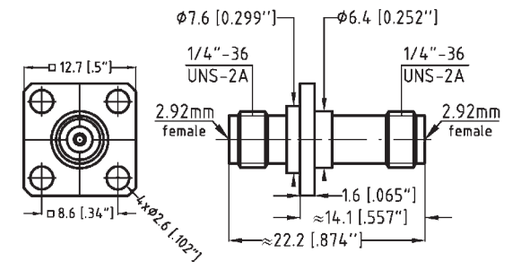

Part - No.	8005-KFKF-02
Connectors	2.92mm-fem. to 2.92mm-fem.
Frequency	DC - 40.0 GHz
VSWR max.	1.03 + 0.005 f (GHz)

Unit has conductive O-Ring

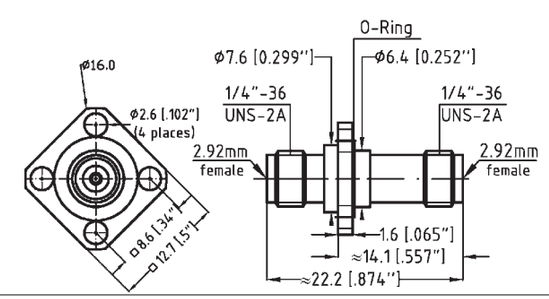

Dimensions shown are Inches over Millimeters or vice versa. Standard units have stainless finish (last 2 digits of the P/N are -02). Interfaces are per DIN 47 223, DIN 47 226, IEC 169-4, IEC 169-7, IEC 169-8, IEC 457-2, IEC 60169-5, IEEE 287, MIL-PRF-39012, MIL DTL-24044, MIL DTL-3643,MIL-STD-348B, where applicable

Spectrum Elektrotechnik GmbH
Germany
www.spectrum-et.com
sales@spectrum-et.com
Phone: +49 / 89 / 35 48 04 0
Fax: +49 / 89 / 35 48 04 90

C

Part - No.	8006-KFKF-02
Connectors	2.92mm-fem. to 2.92mm-fem.
Frequency	DC - 40.0 GHz
VSWR max.	1.03 + 0.005 f (GHz)

unit is supplied with dust cap and chain

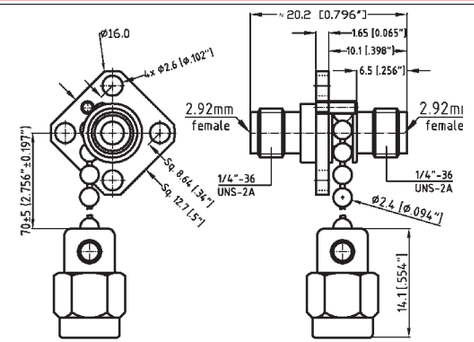

Part - No.	8090-KFKF-02
Connectors	2.92mm-fem. to 2.92mm-fem.
Frequency	DC - 40.0 GHz
VSWR max.	1.03 + 0.006 f (GHz)

True radius right angle

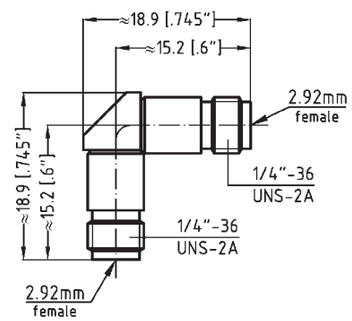

Part - No.	8P90-KFKF-02
Connectors	2.92mm-fem. to 2.92mm-fem.
Frequency	DC - 40.0 GHz
VSWR max.	1.03 + 0.005 f (GHz)

Precision Unit with Best VSWR

True radius right angle

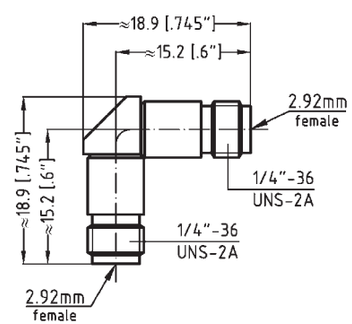

Part - No.	8U90-KFKF-02
Connectors	2.92mm-fem. to 2.92mm-fem.
Frequency	DC - 40.0 GHz
VSWR max.	1.03 + 0.006 f (GHz)

Higher temperature applications

True radius right angle

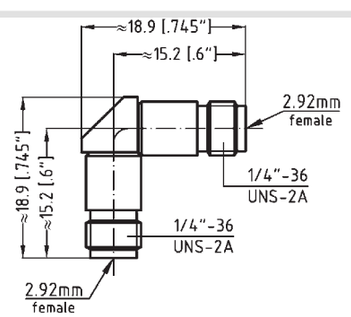

Dimensions shown are Inches over Millimeters or vice versa. Standard units have stainless finish (last 2 digits of the P/N are -02). Interfaces are per DIN 47 223, DIN 47 226, IEC 169-4, IEC 169-7, IEC 169-8, IEC 457-2, IEC 60169-5, IEEE 287, MIL-PRF-39012, MIL DTL-24044, MIL DTL-3643,MIL-STD-348B, where applicable

Spectrum Elektrotechnik GmbH
Germany
www.spectrum-et.com
sales@spectrum-et.com
Phone: +49 / 89 / 35 48 04 0
Fax: +49 / 89 / 35 48 04 90

C

Part - No.	8091-KFKF-02
Connectors	2.92mm-fem. to 2.92mm-fem.
Frequency	DC - 40.0 GHz
VSWR max.	1.03 + 0.008 f (GHz)

Limited availabillity

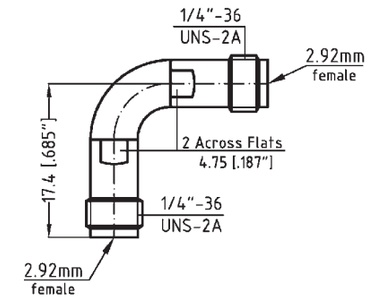

Part - No.	8001-KFKM-02
Connectors	2.92mm-fem. to 2.92mm-male
Frequency	DC - 40.0 GHz
VSWR max.	1.03 + 0.005 f (GHz)

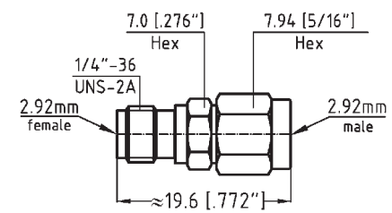

Part - No.	8U01-KFKM-02
Connectors	2.92mm-fem. to 2.92mm-male
Frequency	DC - 40.0 GHz
VSWR max.	1.03 + 0.005 f (GHz)

Higher temperature applications

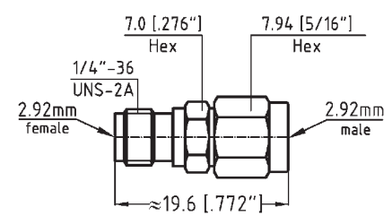

Part - No.	8P01-KFKM-02
Connectors	2.92mm-fem. to 2.92mm-male
Frequency	DC - 40.0 GHz
VSWR max.	1.03 + 0.004 f (GHz)

Best VSWR

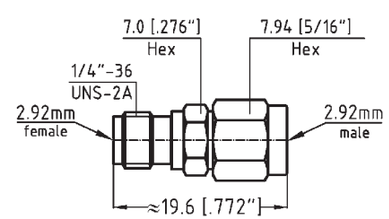

Dimensions shown are Inches over Millimeters or vice versa. Standard units have stainless finish (last 2 digits of the P/N are -02). Interfaces are per DIN 47 223, DIN 47 226, IEC 169-4, IEC 169-7, IEC 169-8, IEC 457-2, IEC 60169-5, IEEE 287, MIL-PRF-39012, MIL DTL-24044, MIL DTL-3643,MIL-STD-348B, where applicable

Spectrum Elektrotechnik GmbH
Germany
www.spectrum-et.com
sales@spectrum-et.com
Phone: +49 / 89 / 35 48 04 0
Fax: +49 / 89 / 35 48 04 90

C

Part - No.	8PU1-KFKM-02
Connectors	2.92mm-fem. to 2.92mm-male
Frequency	DC - 40.0 GHz
VSWR max.	1.03 + 0.004 f (GHz)

Higher temperature applications

Best VSWR

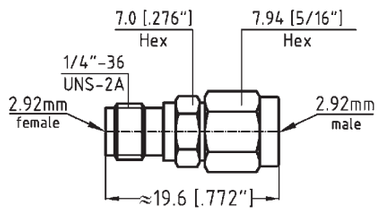

Part - No.	8090-KFKM-02
Connectors	2.92mm-fem. to 2.92mm-male
Frequency	DC - 40.0 GHz
VSWR max.	1.03 + 0.006 f (GHz)

True radius right angle

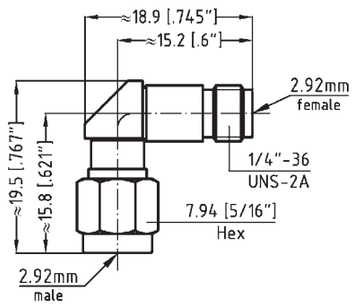

Part - No.	8U90-KFKM-02
Connectors	2.92mm-fem. to 2.92mm-male
Frequency	DC - 40.0 GHz
VSWR max.	1.03 + 0.006 f (GHz)

Higher temperature applications

True radius right angle

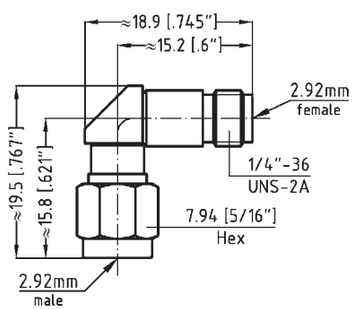

Part - No.	8U9V-KFKM-02
Connectors	2.92mm-fem. to 2.92mm-male
Frequency	DC - 40.0 GHz
VSWR max.	1.03 + 0.006 f (GHz)

Unit has venting holes

Higher temperature applications

True radius right angle

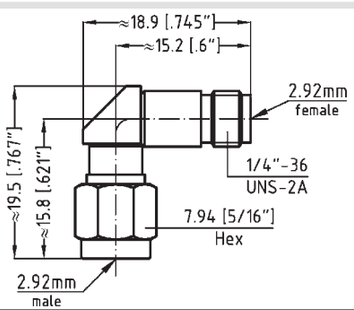

Dimensions shown are Inches over Millimeters or vice versa. Standard units have stainless finish (last 2 digits of the P/N are -02). Interfaces are per DIN 47 223, DIN 47 226, IEC 169-4, IEC 169-7, IEC 169-8, IEC 457-2, IEC 60169-5, IEEE 287, MIL-PRF-39012, MIL DTL-24044, MIL DTL-3643,MIL-STD-348B, where applicable

Spectrum Elektrotechnik GmbH
Germany
www.spectrum-et.com
sales@spectrum-et.com
Phone: +49 / 89 / 35 48 04 0
Fax: +49 / 89 / 35 48 04 90

C

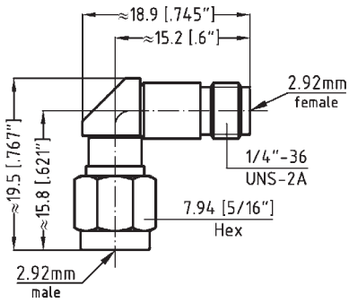

Part - No.	8P90-KFKM-02
Connectors	2.92mm-fem. to 2.92mm-male
Frequency	DC - 40.0 GHz
VSWR max.	1.03 + 0.005 f (GHz)

True radius right angle

Best VSWR

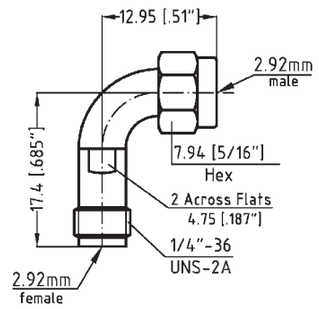

Part - No.	8091-KFKM-02
Connectors	2.92mm-fem. to 2.92mm-male
Frequency	DC - 40.0 GHz
VSWR max.	1.03 + 0.008 f (GHz)

True radius right angle

Limited availabillity

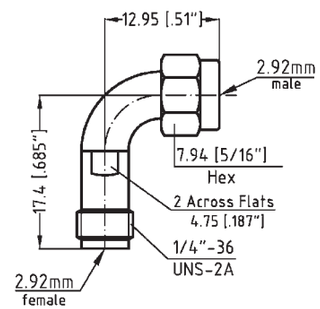

Part - No.	8091-KFKM-00
Connectors	2.92mm-fem. to 2.92mm-male
Frequency	DC - 40.0 GHz
VSWR max.	1.03 + 0.008 f (GHz)

Outer conductor gold plated

True radius right angle

Limited availabillity

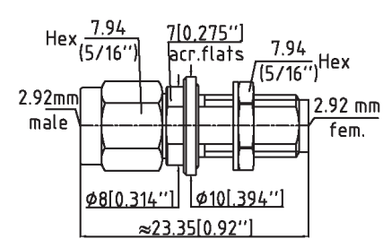

Part - No.	8003-KFKM-02
Connectors	2.92mm-fem. to 2.92mm-male
Frequency	DC - 40.0 GHz
VSWR max.	1.03 + 0.005 f (GHz)

Dimensions shown are Inches over Millimeters or vice versa. Standard units have stainless finish (last 2 digits of the P/N are -02). Interfaces are per DIN 47 223, DIN 47 226, IEC 169-4, IEC 169-7, IEC 169-8, IEC 457-2, IEC 60169-5, IEEE 287, MIL-PRF-39012, MIL DTL-24044, MIL DTL-3643,MIL-STD-348B, where applicable

Spectrum Elektrotechnik GmbH
Germany
www.spectrum-et.com
sales@spectrum-et.com
Phone: +49 / 89 / 35 48 04 0
Fax: +49 / 89 / 35 48 04 90

C

Part - No.	8004-KFKM-02
Connectors	2.92mm-fem. to 2.92mm-male
Frequency	DC - 40.0 GHz
VSWR max.	1.03 + 0.005 f (GHz)

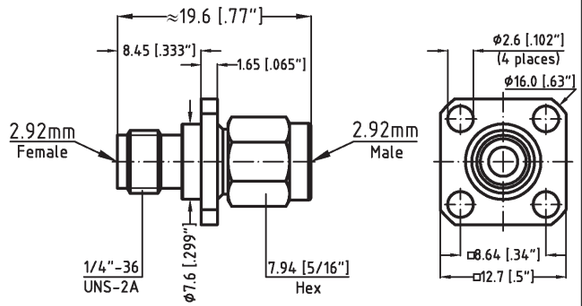

Part - No.	8007-KFKM-02
Connectors	2.92mm-fem. to 2.92mm-male
Frequency	DC - 40.0 GHz
VSWR max.	1.03 + 0.005 f (GHz)

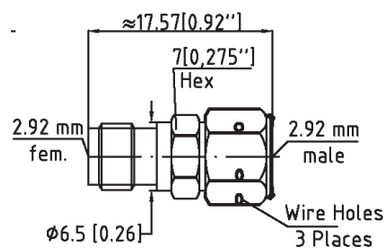

Dimensions shown are Inches over Millimeters or vice versa. Standard units have stainless finish (last 2 digits of the P/N are -02). Interfaces are per DIN 47 223, DIN 47 226, IEC 169-4, IEC 169-7, IEC 169-8, IEC 457-2, IEC 60169-5, IEEE 287, MIL-PRF-39012, MIL DTL-24044, MIL DTL-3643,MIL-STD-348B, where applicable

Spectrum Elektrotechnik GmbH
Germany
www.spectrum-et.com
sales@spectrum-et.com
Phone: +49 / 89 / 35 48 04 0
Fax: +49 / 89 / 35 48 04 90

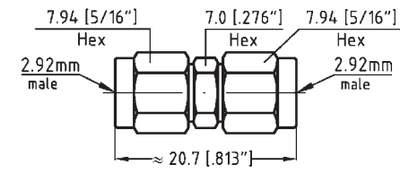

Part - No.	8001-KMKM-02
Connectors	2.92mm-male to 2.92mm-male
Frequency	DC - 40.0 GHz
VSWR max.	1.03 + 0.005 f (GHz)

C

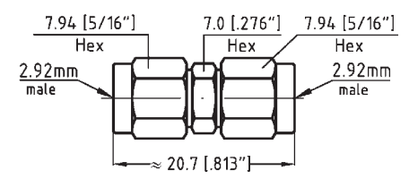

Part - No.	8U01-KMKM-02
Connectors	2.92mm-male to 2.92mm-male
Frequency	DC - 40.0 GHz
VSWR max.	1.03 + 0.005 f (GHz)

Higher temperature applications

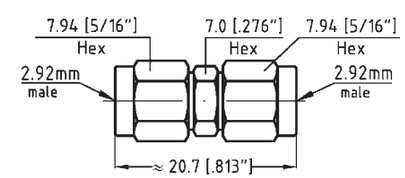

Part - No.	8P01-KMKM-02
Connectors	2.92mm-male to 2.92mm-male
Frequency	DC - 40.0 GHz
VSWR max.	1.03 + 0.004 f (GHz)

Best VSWR

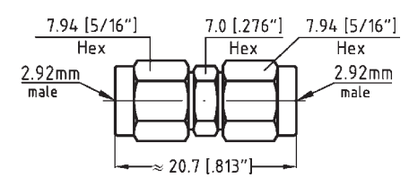

Part - No.	8PU1-KMKM-02
Connectors	2.92mm-male to 2.92mm-male
Frequency	DC - 40.0 GHz
VSWR max.	1.03 + 0.004 f (GHz)

Higher temperature applications

Best VSWR

Dimensions shown are Inches over Millimeters or vice versa. Standard units have stainless finish (last 2 digits of the P/N are -02). Interfaces are per DIN 47 223, DIN 47 226, IEC 169-4, IEC 169-7, IEC 169-8, IEC 457-2, IEC 60169-5, IEEE 287, MIL-PRF-39012, MIL DTL-24044, MIL DTL-3643,MIL-STD-348B, where applicable

Spectrum Elektrotechnik GmbH
Germany
www.spectrum-et.com
sales@spectrum-et.com
Phone: +49 / 89 / 35 48 04 0
Fax: +49 / 89 / 35 48 04 90

C

Part - No.	8090-KMKM-02
Connectors	2.92mm-male to 2.92mm-male
Frequency	DC - 40.0 GHz
VSWR max.	1.03 + 0.006 f (GHz)
	True radius right angle

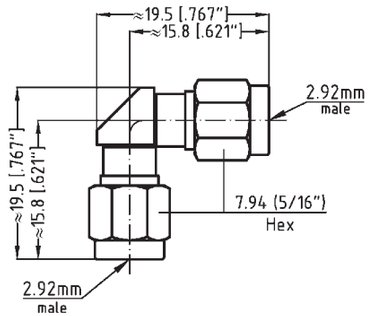

Part - No.	8P90-KMKM-02
Connectors	2.92mm-male to 2.92mm-male
Frequency	DC - 40.0 GHz
VSWR max.	1.03 + 0.005 f (GHz)
	True radius right angle
	Best VSWR

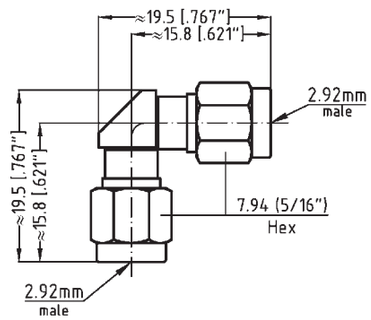

Part - No.	8190-KMKM-02
Connectors	2.92mm-male to 2.92mm-male
Frequency	DC - 18.0 GHz
VSWR max.	1.03 + 0.005 f (GHz)
	Mitred right angle

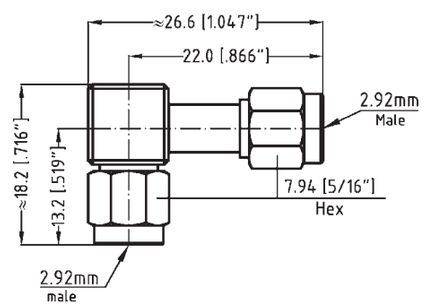

Part - No.	8091-KMKM-02
Connectors	2.92mm-male to 2.92mm-male
Frequency	DC - 40.0 GHz
VSWR max.	1.03 + 0.006 f (GHz)
	True radius right angle

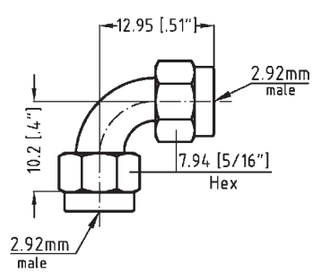

Dimensions shown are Inches over Millimeters or vice versa. Standard units have stainless finish (last 2 digits of the P/N are -02). Interfaces are per DIN 47 223, DIN 47 226, IEC 169-4, IEC 169-7, IEC 169-8, IEC 457-2, IEC 60169-5, IEEE 287, MIL-PRF-39012, MIL DTL-24044, MIL DTL-3643,MIL-STD-348B, where applicable

Spectrum Elektrotechnik GmbH
Germany
www.spectrum-et.com
sales@spectrum-et.com
Phone: +49 / 89 / 35 48 04 0
Fax: +49 / 89 / 35 48 04 90

C

Part - No.	8801-KFKF-02
Connectors	2.92mm-fem. to 2.92mm-fem.
Frequency	DC - 40.0 GHz
VSWR max.	1.03 + 0.005 f (GHz)

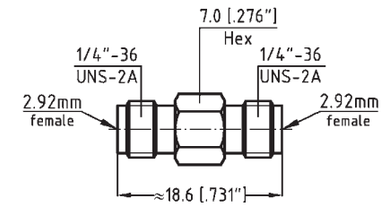

Part - No.	8801-KFKM-02
Connectors	2.92mm-fem. to 2.92mm-male
Frequency	DC - 40.0 GHz
VSWR max.	1.03 + 0.005 f (GHz)

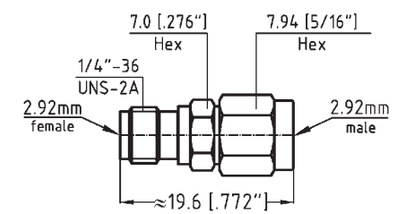

Part - No.	8801-KMKM-02
Connectors	2.92mm-male to 2.92mm-male
Frequency	DC - 40.0 GHz
VSWR max.	1.03 + 0.005 f (GHz)

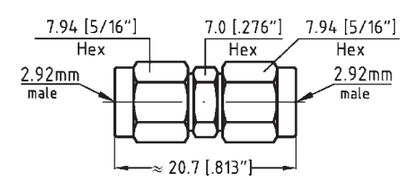

Although our catalog incorporates a very comprehensive range of products, due to our program of continuous development, there is no way that it will contain every product we manufacture. Please consult the factory for the product you require.

Dimensions shown are Inches over Millimeters or vice versa. Standard units have stainless finish (last 2 digits of the P/N are -02). Interfaces are per DIN 47 223, DIN 47 226, IEC 169-4, IEC 169-7, IEC 169-8, IEC 457-2, IEC 60169-5, IEEE 287, MIL-PRF-39012, MIL DTL-24044, MIL DTL-3643,MIL-STD-348B, where applicable

Spectrum Elektrotechnik GmbH
Germany
www.spectrum-et.com
sales@spectrum-et.com
Phone: +49 / 89 / 35 48 04 0
Fax: +49 / 89 / 35 48 04 90

C

Part - No.	8001-KFVF-02
Connectors	2.92 mm-fem. to 1.85mm-fem.
Frequency	DC - 40.0 GHz
VSWR max.	1.03 + 0.005 f (GHz)

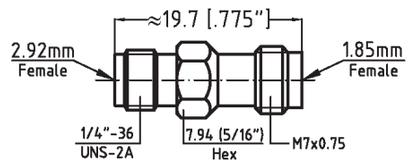

Part - No.	8001-KFVM-02
Connectors	2.92mm-fem. to 1.85mm-male
Frequency	DC - 40.0 GHz
VSWR max.	1.03 + 0.005 f (GHz)

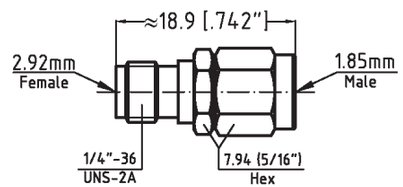

Part - No.	802V-KFVM-02
Connectors	2.92mm-fem. to 1.85mm-male
Frequency	DC - 40.0 GHz
VSWR max.	1.03 + 0.005 f (GHz)

Unit has venting holes

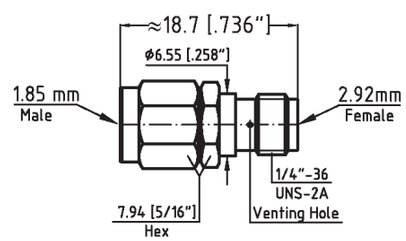

Part - No.	8001-KMVF-02
Connectors	2.92mm-male to 1.85mm-fem.
Frequency	DC - 40.0 GHz
VSWR max.	1.03 + 0.005 f (GHz)

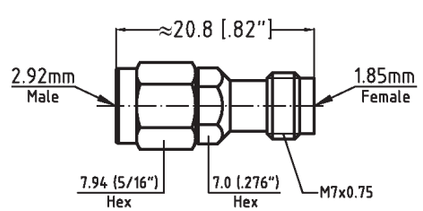

Dimensions shown are Inches over Millimeters or vice versa. Standard units have stainless finish (last 2 digits of the P/N are -02). Interfaces are per DIN 47 223, DIN 47 226, IEC 169-4, IEC 169-7, IEC 169-8, IEC 457-2, IEC 60169-5, IEEE 287, MIL-PRF-39012, MIL DTL-24044, MIL DTL-3643,MIL-STD-348B, where applicable

Spectrum Elektrotechnik GmbH
Germany
www.spectrum-et.com
sales@spectrum-et.com
Phone: +49 / 89 / 35 48 04 0
Fax: +49 / 89 / 35 48 04 90

C

Part - No.	8001-KMVM-02
Connectors	2.92mm-male to 1.85mm-male
Frequency	DC - 40.0 GHz
VSWR max.	1.03 + 0.005 f (GHz)

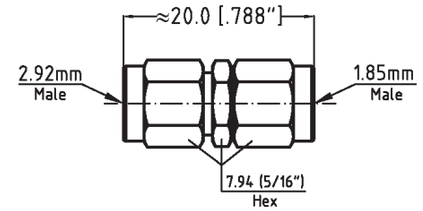

Part - No.	8090-HFKF-02
Connectors	2.92mm-fem. to 2.4mm-fem.
Frequency	DC - 40.0 GHz
VSWR max.	1.03 + 0.006 f (GHz)

True radius right angle

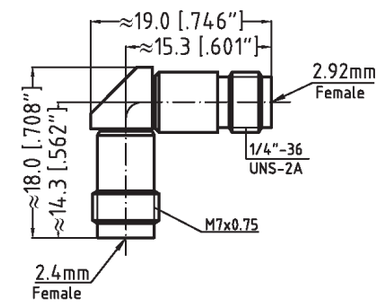

Dimensions shown are Inches over Millimeters or vice versa. Standard units have stainless finish (last 2 digits of the P/N are -02). Interfaces are per DIN 47 223, DIN 47 226, IEC 169-4, IEC 169-7, IEC 169-8, IEC 457-2, IEC 60169-5, IEEE 287, MIL-PRF-39012, MIL DTL-24044, MIL DTL-3643,MIL-STD-348B, where applicable

Spectrum Elektrotechnik GmbH
Germany
www.spectrum-et.com
sales@spectrum-et.com
Phone: +49 / 89 / 35 48 04 0
Fax: +49 / 89 / 35 48 04 90

C

Part - No.	8001-HFKF-02
Connectors	2.92mm-fem. to 2.4mm-fem.
Frequency	DC - 40.0 GHz
VSWR max.	1.03 + 0.005 f (GHz)

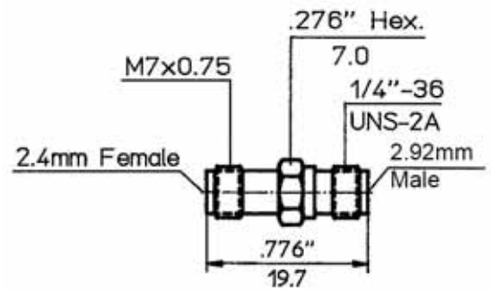

Part - No.	8U01-HFKF-02
Connectors	2.92mm-fem. to 2.4mm-fem.
Frequency	DC - 40.0 GHz
VSWR max.	1.03 + 0.005 f (GHz)

Higher temperature applications

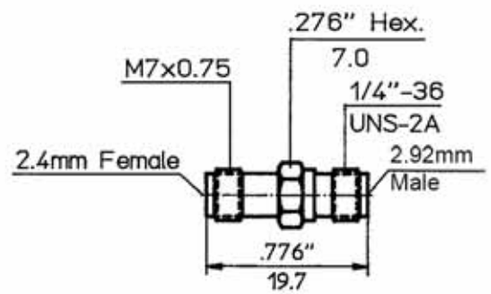

Part - No.	8P01-HFKF-02
Connectors	2.92mm-fem. to 2.4mm-fem.
Frequency	DC - 40.0 GHz
VSWR max.	1.03 + 0.004 f (GHz)

Best VSWR

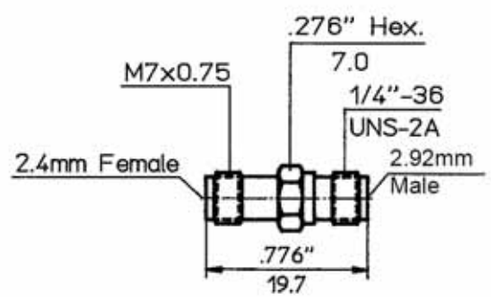

Part - No.	8PU1-HFKF-02
Connectors	2.92mm-fem. to 2.4mm-fem.
Frequency	DC - 40.0 GHz
VSWR max.	1.03 + 0.004 f (GHz)

Best VSWR

Higher temperature applications

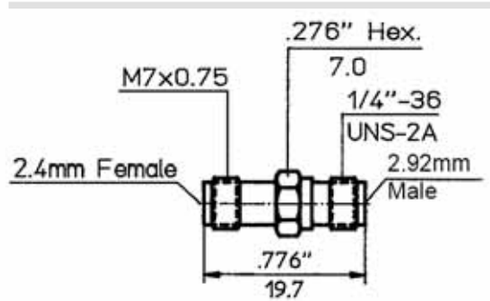

Dimensions shown are Inches over Millimeters or vice versa. Standard units have stainless finish (last 2 digits of the P/N are -02). Interfaces are per DIN 47 223, DIN 47 226, IEC 169-4, IEC 169-7, IEC 169-8, IEC 457-2, IEC 60169-5, IEEE 287, MIL-PRF-39012, MIL DTL-24044, MIL DTL-3643,MIL-STD-348B, where applicable

Spectrum Elektrotechnik GmbH
Germany
www.spectrum-et.com
sales@spectrum-et.com
Phone: +49 / 89 / 35 48 04 0
Fax: +49 / 89 / 35 48 04 90

C

Part - No.	8001-HFKM-02
Connectors	2.92mm-male to 2.4mm-fem.
Frequency	DC - 40.0 GHz
VSWR max.	1.03 + 0.005 f (GHz)

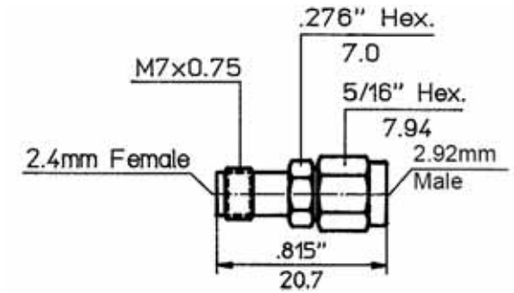

Part - No.	8U01-HFKM-02
Connectors	2.92mm-male to 2.4mm-fem.
Frequency	DC - 40.0 GHz
VSWR max.	1.03 + 0.005 f (GHz)

Higher temperature applications

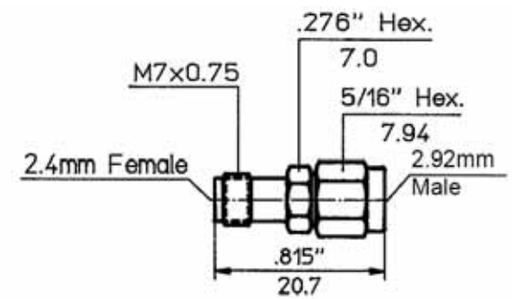

Part - No.	8P01-HFKM-02
Connectors	2.92mm-male to 2.4mm-fem.
Frequency	DC - 40.0 GHz
VSWR max.	1.03 + 0.004 f (GHz)

Best VSWR

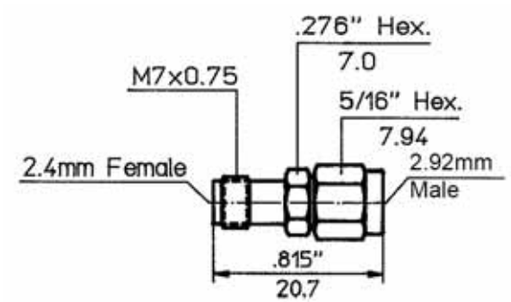

Part - No.	8PU1-HFKM-02
Connectors	2.92mm-fem. to 2.92mm-male
Frequency	DC - 40.0 GHz
VSWR max.	1.03 + 0.004 f (GHz)

Best VSWR

Higher temperature applications

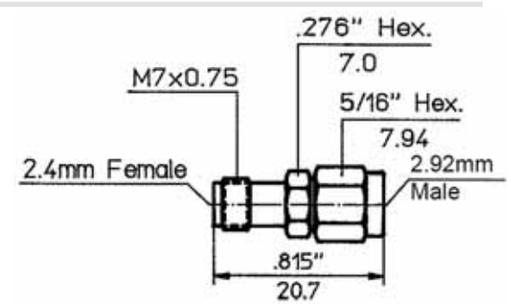

Dimensions shown are Inches over Millimeters or vice versa. Standard units have stainless finish (last 2 digits of the P/N are -02). Interfaces are per DIN 47 223, DIN 47 226, IEC 169-4, IEC 169-7, IEC 169-8, IEC 457-2, IEC 60169-5, IEEE 287, MIL-PRF-39012, MIL DTL-24044, MIL DTL-3643,MIL-STD-348B, where applicable

Spectrum Elektrotechnik GmbH
Germany
www.spectrum-et.com
sales@spectrum-et.com
Phone: +49 / 89 / 35 48 04 0
Fax: +49 / 89 / 35 48 04 90

C

Part - No.	8001-HFKM-S1
Connectors	2.92mm-male to 2.4mm-fem.
Frequency	DC - 40 GHz
VSWR max.	1.03 + 0.005 x f(GHz)

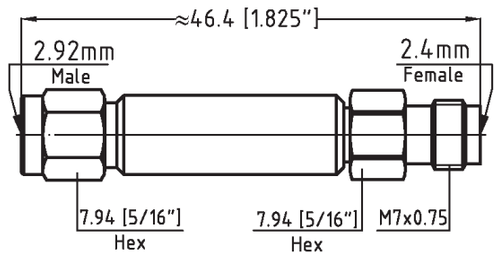

Part - No.	8090-HFKM-02
Connectors	2.92mm-male to 2.4mm-fem.
Frequency	DC - 40.0 GHz
VSWR max.	1.03 + 0.006 f (GHz)
	True radius right angle

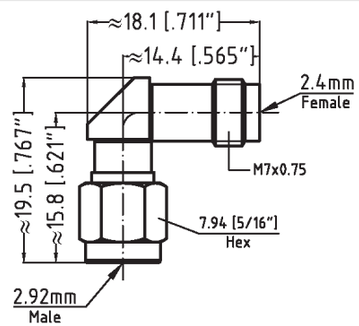

Part - No.	8090-HMKF-02
Connectors	2.92mm-fem. to 2.4mm-male
Frequency	DC - 40.0 GHz
VSWR max.	1.03 + 0.006 f (GHz)
	True radius right angle

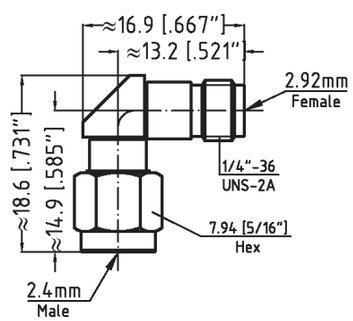

Part - No.	8P90-HMKF-02
Connectors	2.92mm-fem. to 2.4mm-male
Frequency	DC - 40.0 GHz
VSWR max.	1.03 + 0.005 f (GHz)
	Best VSWR
	True radius right angle

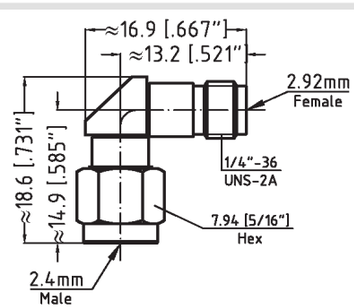

Dimensions shown are Inches over Millimeters or vice versa. Standard units have stainless finish (last 2 digits of the P/N are -02). Interfaces are per DIN 47 223, DIN 47 226, IEC 169-4, IEC 169-7, IEC 169-8, IEC 457-2, IEC 60169-5, IEEE 287, MIL-PRF-39012, MIL DTL-24044, MIL DTL-3643,MIL-STD-348B, where applicable

Spectrum Elektrotechnik GmbH
Germany
www.spectrum-et.com
sales@spectrum-et.com
Phone: +49 / 89 / 35 48 04 0
Fax: +49 / 89 / 35 48 04 90

C

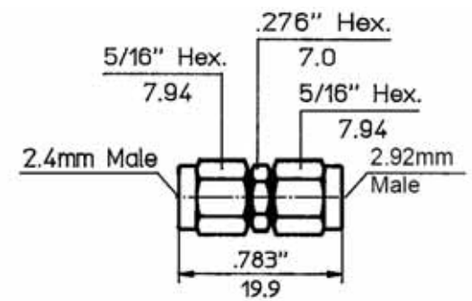

Part - No.	8001-HMKM-02
Connectors	2.92mm-male to 2.4mm-male
Frequency	DC - 40.0 GHz
VSWR max.	1.03 + 0.005 f (GHz)

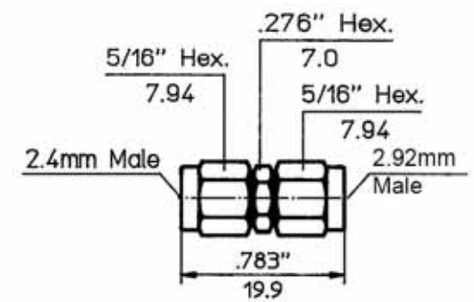

Part - No.	8U01-HMKM-02
Connectors	2.92mm-male to 2.4mm-male
Frequency	DC - 40.0 GHz
VSWR max.	1.03 + 0.005 f (GHz)
	Higher temperature applications

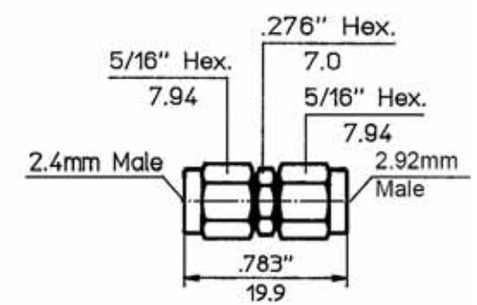

Part - No.	8P01-HMKM-02
Connectors	2.92mm-male to 2.4mm-male
Frequency	DC - 40.0 GHz
VSWR max.	1.03 + 0.004 f (GHz)
	Best VSWR

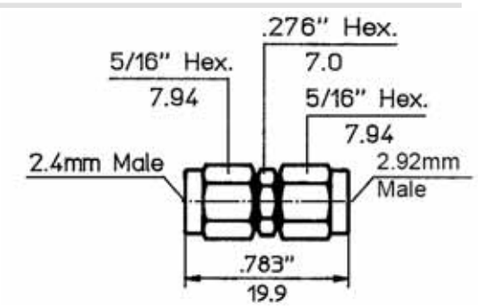

Part - No.	8PU1-HMKM-02
Connectors	2.92mm-male to 2.4mm-male
Frequency	DC - 40.0 GHz
VSWR max.	1.03 + 0.004 f (GHz)
	Best VSWR
	Higher temperature applications

Dimensions shown are Inches over Millimeters or vice versa. Standard units have stainless finish (last 2 digits of the P/N are -02). Interfaces are per DIN 47 223, DIN 47 226, IEC 169-4, IEC 169-7, IEC 169-8, IEC 457-2, IEC 60169-5, IEEE 287, MIL-PRF-39012, MIL DTL-24044, MIL DTL-3643,MIL-STD-348B, where applicable

Spectrum Elektrotechnik GmbH
Germany
www.spectrum-et.com
sales@spectrum-et.com
Phone: +49 / 89 / 35 48 04 0
Fax: +49 / 89 / 35 48 04 90

C

Part - No.	8090-HMKM-02
Connectors	2.92mm-male to 2.4mm-male
Frequency	DC - 40.0 GHz
VSWR max.	1.03 + 0.006 f (GHz)

True radius right angle

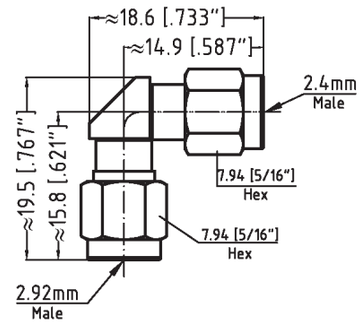

Part - No.	8001-HMKF-02
Connectors	2.92mm-fem. to 2.4mm-male
Frequency	DC - 40.0 GHz
VSWR max.	1.03 + 0.005 f (GHz)

8U01-HMKF-02 for higher temp. applications

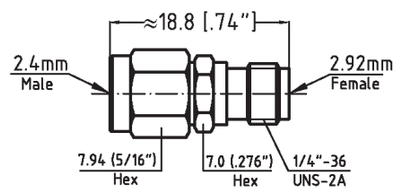

Part - No.	8P01-HMKF-02
Connectors	2.92mm-fem. to 2.4mm-male
Frequency	DC - 40.0 GHz
VSWR max.	1.03 + 0.004 f (GHz)

Best VSWR

8PU1-HMKF-02 for higher temp. applications

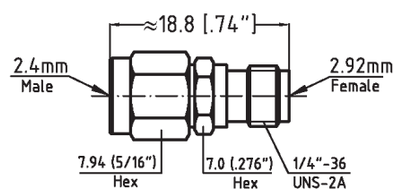

Part - No.	8001-HMKF-S1
Connectors	2.92mm-fem. to 2.4mm-male
Frequency	DC - 40.0 GHz
VSWR max.	1.03 + 0.005 f (GHz)

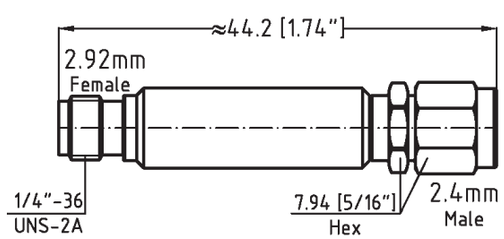

Dimensions shown are Inches over Millimeters or vice versa. Standard units have stainless finish (last 2 digits of the P/N are -02). Interfaces are per DIN 47 223, DIN 47 226, IEC 169-4, IEC 169-7, IEC 169-8, IEC 457-2, IEC 60169-5, IEEE 287, MIL-PRF-39012, MIL DTL-24044, MIL DTL-3643,MIL-STD-348B, where applicable

Spectrum Elektrotechnik GmbH
Germany
www.spectrum-et.com
sales@spectrum-et.com
Phone: +49 / 89 / 35 48 04 0
Fax: +49 / 89 / 35 48 04 90

C

Part - No.	8801-HFKF-02
Connectors	2.92mm-fem. to 2.4mm-fem.
Frequency	DC - 40.0 GHz
VSWR max.	1.03 + 0.005 f (GHz)

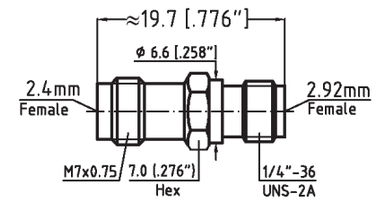

Part - No.	8801-HFKM-02
Connectors	2.92mm-male to 2.4mm-fem.
Frequency	DC - 40.0 GHz
VSWR max.	1.03 + 0.005 f (GHz)

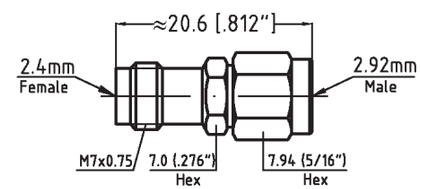

Part - No.	8801-HMKF-02
Connectors	2.92mm-fem. to 2.4mm-male
Frequency	DC - 40.0 GHz
VSWR max.	1.03 + 0.005 f (GHz)

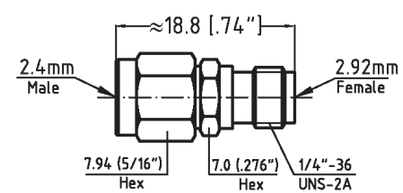

Part - No.	8801-HMKM-02
Connectors	2.92mm-male to 2.4mm-male
Frequency	DC - 40.0 GHz
VSWR max.	1.03 + 0.005 f (GHz)

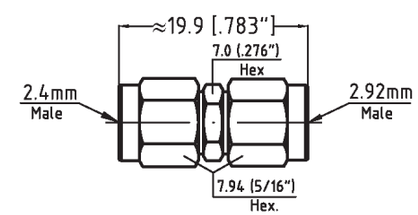

Dimensions shown are Inches over Millimeters or vice versa. Standard units have stainless finish (last 2 digits of the P/N are -02). Interfaces are per DIN 47 223, DIN 47 226, IEC 169-4, IEC 169-7, IEC 169-8, IEC 457-2, IEC 60169-5, IEEE 287, MIL-PRF-39012, MIL DTL-24044, MIL DTL-3643,MIL-STD-348B, where applicable

Spectrum Elektrotechnik GmbH
Germany
www.spectrum-et.com
sales@spectrum-et.com
Phone: +49 / 89 / 35 48 04 0
Fax: +49 / 89 / 35 48 04 90

C

Part - No.	88U1-HFKF-02
Connectors	2.92mm-fem. to 2.4mm-fem.
Frequency	DC - 40.0 GHz
VSWR max.	1.03 + 0.005 f (GHz)
	Higher temperature applications

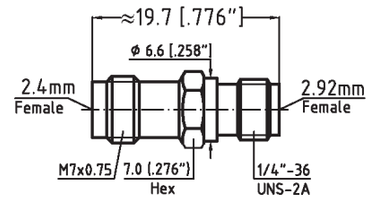

Part - No.	88U1-HFKM-02
Connectors	2.92mm-male to 2.4mm-fem.
Frequency	DC - 40.0 GHz
VSWR max.	1.03 + 0.005 f (GHz)
	Higher temperature applications

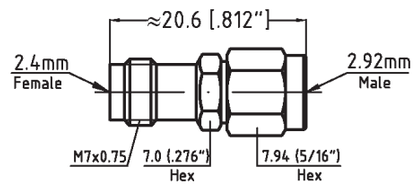

Part - No.	88U1-HMKF-02
Connectors	2.92mm-fem. to 2.4mm-male
Frequency	DC - 40.0 GHz
VSWR max.	1.03 + 0.005 f (GHz)
	Higher temperature applications

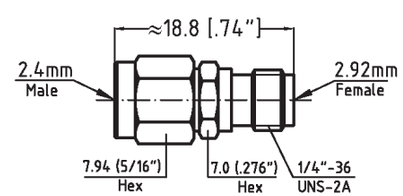

Part - No.	88U1-HMKM-02
Connectors	2.92mm-male to 2.4mm-male
Frequency	DC - 40.0 GHz
VSWR max.	1.03 + 0.005 f (GHz)
	Higher temperature applications

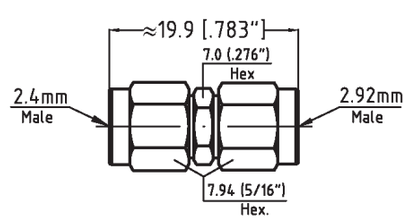

Dimensions shown are Inches over Millimeters or vice versa. Standard units have stainless finish (last 2 digits of the P/N are -02). Interfaces are per DIN 47 223, DIN 47 226, IEC 169-4, IEC 169-7, IEC 169-8, IEC 457-2, IEC 60169-5, IEEE 287, MIL-PRF-39012, MIL DTL-24044, MIL DTL-3643,MIL-STD-348B, where applicable

Spectrum Elektrotechnik GmbH
Germany
www.spectrum-et.com
sales@spectrum-et.com
Phone: +49 / 89 / 35 48 04 0
Fax: +49 / 89 / 35 48 04 90

Between-Series 2.9mm Reverse Sex

If your choice of 2.92mm Reverse Sex Adapter is not shown in this section, please refer to the Table below to determine other possible locations. Should you not find your adapter listed in any section, please consult the factory or your Spectrum Elektrotechnik Area Representative.

1 C

2.92mm Reverse Sex	Section	Page
2.92mm Reverse Sex Overview & Specifications	1C	1
2.92mm Reverse Sex Between-Series to 2.92mm		4

Although our catalog incorporates a very comprehensive range of products, due to our program of continuous development, there is no way that it will contain every product we manufacture. Please consult the factory for the product you require.
To improve our Standard Products we reserve the right to make changes. Specifications are therefore subject to change without notice.

Dimensions shown are Inches over Millimeters or vice versa. Standard units have stainless finish (last 2 digits of the P/N are -02). Interfaces are per DIN 47 223, DIN 47 226, IEC 169-4, IEC 169-7, IEC 169-8, IEC 457-2, IEC 60169-5, IEEE 287, MIL-PRF-39012, MIL DTL-24044, MIL DTL-3643,MIL-STD-348B, where applicable

Spectrum Elektrotechnik GmbH
Germany
www.spectrum-et.com
sales@spectrum-et.com
Phone: +49 / 89 / 35 48 04 0
Fax: +49 / 89 / 35 48 04 90

The specifications below are general specifications for all 2.92mm connectors. Specific Data for VSWR, Insertion Loss, R.F. leakage, etc., are available from the factory upon request. Specifications in the following table are recommended for any procurement documents or drawings. In the event of any conflict between these specifications and General Specifications IEEE 287, these specifications shall govern. These specifications are subject to change according to the latest revision.

REQUIREMENT	GENERAL SPECIFICATIONS
Standard Materials	STEEL corrosion resistant 1.4305 per DIN EN 10088; ASTM-A582 (303), or 1.4404 (316L) respectively. ALUMINUM AlMg4.5Mn per DIN DIN EN 1706, AlMgSi0.5 per DIN EN 1706, AlMgSi1 per DIN EN 1706 (6061-T6 per QQ-A-225/8). BRASS CuZn39Pb3 per DIN 17660 (QQ-B-626 (ASTM-B124), half hard). COPPER BERYLLIUM 33-25 CuBe2PbH per DIN17666(DIN CEN/TS;DIN SPEC 9700)(QQ-C530). Thermoplast per DIN EN ISO 10350, respectively PEI per in-house specification for higher temperature applications. SILICONE RUBBER per DIN ISO 3601 (A-A-59588,Class IIB) Gr. 50 - 75. BORIUM NITRITE Dielectric for high power applications per in-house specification
Finish for COPPER BERYLLIUM STAINLESS STEEL ALUMINUM BRASS VARIOUS	Center Contacts shall be gold plated to a minimum thickness of .00005-inch in accordance with ASTM-B-488, Type III, Code C, Class 1.25 shall be passivated per ASTM-A967 Conductive Parts shall have an iridited finish per MIL-DTL-5541 Other parts, such as Coupling Nuts and Back-Bodies shall be anodized per MIL-A-8625. .00003 inch (0.8 µm) min. gold plating per MIL-DTL-45204, or nickel plating per QQ-N-290, as specified. Imoloy .0001 inch (2.5 µm) min. plating, consisting of 55% Copper / 20% Zinc / 25% Tin (on special request).
Design	The design shall be such that the outline dimensions in this catalog are met. In addition, the assembled connector shall meet the interface dimensions.
ELECTRICAL	
Frequency Range	DC - 40.0 GHz min.
Insulation Resistance	Insulation resistance is not applicable
Voltage Standing Wave Ratio (VSWR)	1.03 + 0.005 x f (GHz)
Contact Resistance	The center contact resistance drop shall not exceed 0.75 milliohms) and the outer contact resistance drop shall not exceed 0.13 milliohms.
Dielectric Withstanding Voltage	The magnitude of the test voltage shall be 1,000 volts rms at sea level.
RF High Potential Withstanding Voltage	RF high potential withstanding voltage not applicable. Leakage is not applicable.
RF Leakage	- (100 - f (GHz)) dB
Insertion Loss	(.025 SQT(f(GHz))) dB(IEEE 287: 0.3dB)
MECHANICAL	
Connect/Disconnect Life	2000 cycles
Maximum insertion force	4.5 N
Withdrawal force	0.4 N min. ; 3.3 N max.
Coupling torque	0.6 - 1.0 Nm.
Maximum safety torque	1.8 Nm
Depth of insertion	1.5 mm
ENVIRONMENTAL	
Corrosion (Salt Spray)	Specification MIL-STD-202, Method 101, Test Condition B. The salt solution shall be 5%.
Vibration	Specification MIL-STD-202, Method 204, Test Condition B.
Shock	Specification MIL-STD-202, Method 213, Test Condition I.
Thermal Shock	Specification MIL-STD-202, Method 107, Test Condition B, except high temperature shall be +70°C when the regular Bead is used, and +170° when the high temperature Bead is used.
Moisture Resistance	Specification MIL-STD-202, Method 106. Step 7b (vibration) shall be omitted. Insulation resistance shall be 200 megohms min. within 5 minutes of removal from humidity.
Corona Level	Corona Level is not applicable.

Dimensions shown are Inches over Millimeters or vice versa. Standard units have stainless finish (last 2 digits of the P/N are -02). Interfaces are per DIN 47 223, DIN 47 226, IEC 169-4, IEC 169-7, IEC 169-8, IEC 457-2, IEC 60169-5, IEEE 287, MIL-PRF-39012, MIL DTL-24044, MIL DTL-3643,MIL-STD-348B, where applicable

Spectrum Elektrotechnik GmbH
Germany
www.spectrum-et.com
sales@spectrum-et.com
Phone: +49 / 89 / 35 48 04 0
Fax: +49 / 89 / 35 48 04 90

2.92mm Reverse Sex Feale

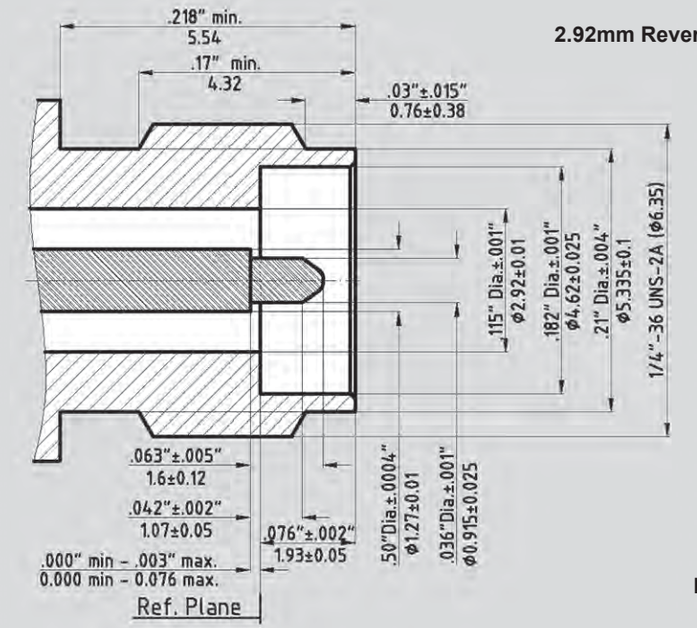

DC to 40 GHz

2.92mm Reverse Sex Male

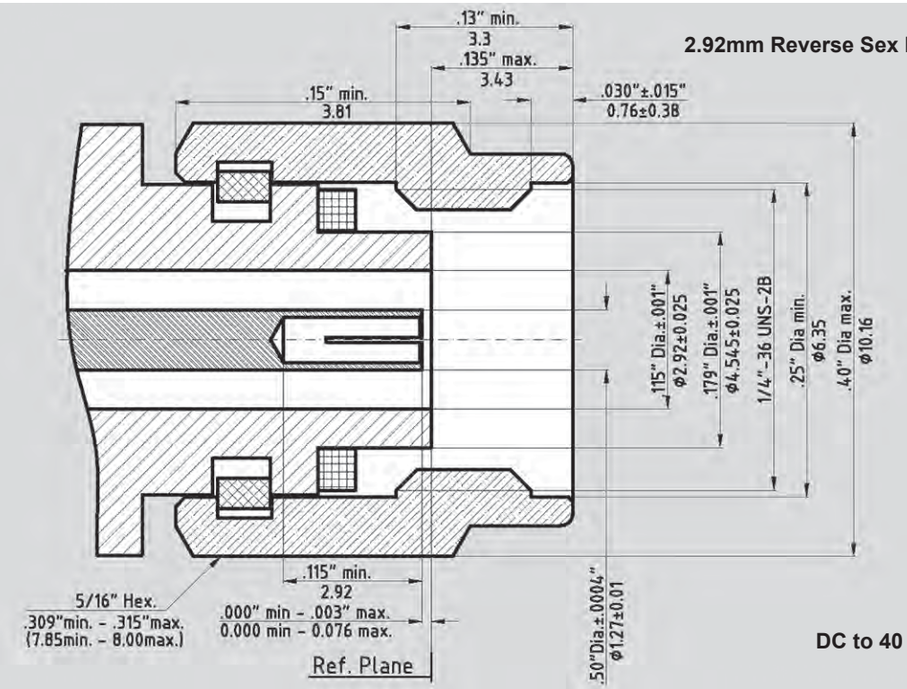

DC to 40 GHz

Dimensions shown are Inches over Millimeters or vice versa. Standard units have stainless finish (last 2 digits of the P/N are -02). Interfaces are per DIN 47 223, DIN 47 226, IEC 169-4, IEC 169-7, IEC 169-8, IEC 457-2, IEC 60169-5, IEEE 287, MIL-PRF-39012, MIL DTL-24044, MIL DTL-3643,MIL-STD-348B, where applicable

Spectrum Elektrotechnik GmbH
Germany
www.spectrum-et.com
sales@spectrum-et.com
Phone: +49 / 89 / 35 48 04 0
Fax: +49 / 89 / 35 48 04 90

Part - No.	8001-S004-02
Connectors	2.92mm-m rev.Sex to 2.4mm-fem.
Frequency	DC - 40.0 GHz
VSWR max.	1.03 + 0.005 f (GHz)

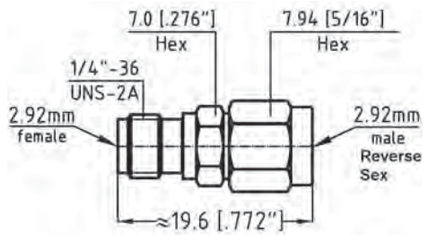

1 C

Part - No.	8001-S005-02
Connectors	2.92mm-f rev.Sex to 2.4mm-fem.
Frequency	DC - 40.0 GHz
VSWR max.	1.03 + 0.005 f (GHz)

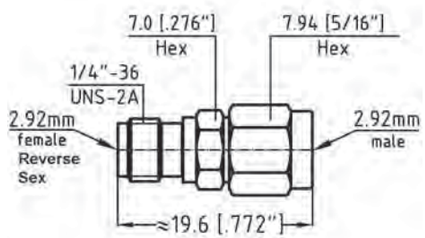

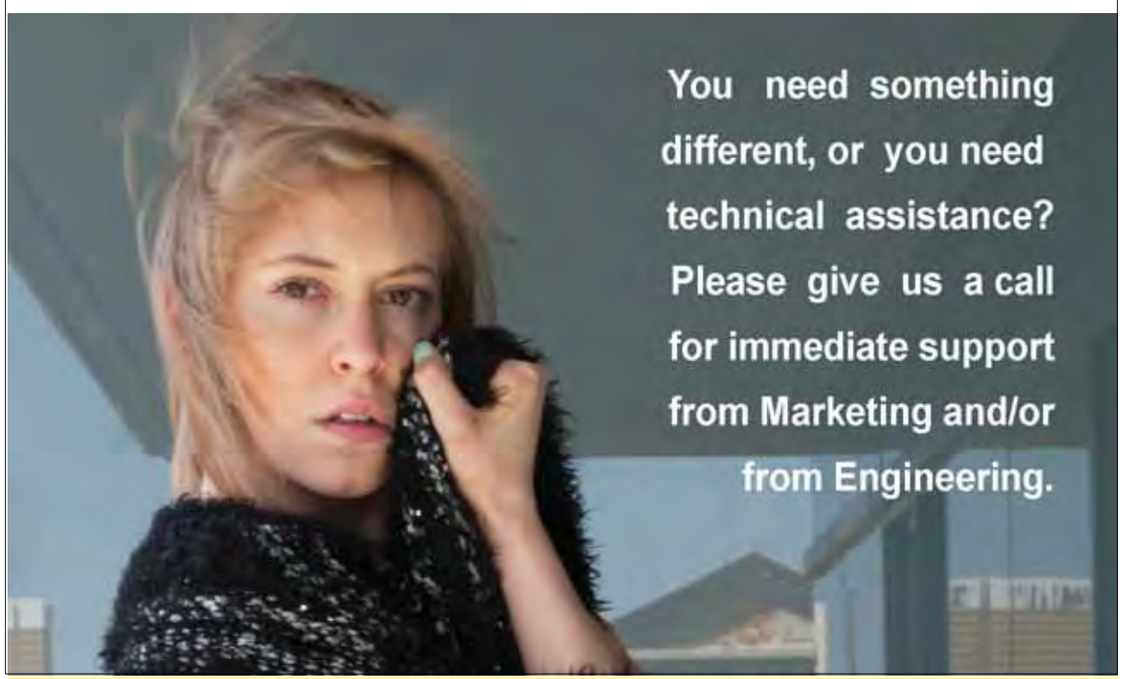

Dimensions shown are Inches over Millimeters or vice versa. Standard units have stainless finish (last 2 digits of the P/N are -02). Interfaces are per DIN 47 223, DIN 47 226, IEC 169-4, IEC 169-7, IEC 169-8, IEC 457-2, IEC 60169-5, IEEE 287, MIL-PRF-39012, MIL DTL-24044, MIL DTL-3643,MIL-STD-348B, where applicable

Spectrum Elektrotechnik GmbH
Germany
www.spectrum-et.com
sales@spectrum-et.com
Phone: +49 / 89 / 35 48 04 0
Fax: +49 / 89 / 35 48 04 90

In-Series and Between-Series Adapters 3.5mm

If your choice of 3.5 mm Adapter is not shown in this section, please refer to the Table below to determine other possible locations. Should you not find your adapter listed in any section, please consult the factory or your Spectrum Elektrotechnik Area Representative.

3.5mm	Section	Page
3.5mm Overview & Specifications	D	1
3.5mm In-Series		4
3.5mm In-Series of equal electrical length		9
Between Series 3.5mm to 2.4mm		10
Between Series 3,5mm to 2.4mm of equal el. length		15
Between Series 3.5mm to 2.92mm		16
Between Series 3.5mm to 7mm	E	8
Between Series 3.5mm to 2.4mm NMD	CC	5
Between Series 3.5mm to 2.92mm NMD		8
Between Series 3.5mm to 3.5mm NMD		11
Between Series 3.5mm NMD to 2.4mm		10
Between Series 3.5mm NMD to 2.92mm		10
Between Series 3.5mm NMD to 3.5mm		11
Between Series 3.5mm NMD to 7mm		12
Between Series 3.5mm NMD to N		12
Between Series 3.5mm to N NMD		14
Between Series 3.5mm to N	K	24
Between Series 3.5mm to N of equal electr. lengths		27
Between Series 3.5mm to SMP Calibration Kit Units	S	23
Between Series 3.5mm to TNC	X	21
Between Series 3.5mm to TNX	Z	5
Between Series 3.5mm to 3.5mm with Metric Thread	AA	4

D

Although our catalog incorporates a very comprehensive range of products, due to our program of continuous development, there is no way that it will contain every product we manufacture. Please consult the factory for the product you require.
To improve our Standard Products we reserve the right to make changes. Specifications are therefore subject to change without notice.

Dimensions shown are Inches over Millimeters or vice versa. Standard units have stainless finish (last 2 digits of the P/N are -02). Interfaces are per DIN 47 223, DIN 47 226, IEC 169-4, IEC 169-7, IEC 169-8, IEC 457-2, IEC 60169-5, IEEE 287, MIL-PRF-39012, MIL DTL-24044, MIL DTL-3643,MIL-STD-348B, where applicable

Spectrum Elektrotechnik GmbH
Germany
www.spectrum-et.com
sales@spectrum-et.com
Phone: +49 / 89 / 35 48 04 0
Fax: +49 / 89 / 35 48 04 90

3.5 mm Specifications to IEEE 287

The specifications below are general specifications for all 3.5mm connectors. Specific Data for VSWR, Insertion Loss, R.F. leakage, etc., are available from the factory upon request. Specifications in the following table are recommended for any procurement documents or drawings. In the event of any conflict between these specifications and General Specifications IEEE 287, these specifications shall govern. These specifications are subject to change according to the latest revision.

REQUIREMENT	GENERAL SPECIFICATIONS
Standard Materials	STEEL corrosion resistant 1.4305 per DIN EN 10088; ASTM-A582 (303), or 1.4404 (316L) respectively. ALUMINUM AlMg4.5Mn per DIN DIN EN 1706, AlMgSi0.5 per DIN EN 1706, AlMgSi1 per DIN EN 1706 (6061-T6 per QQ-A-225/8). BRASS CuZn39Pb3 per DIN 17660 (QQ-B-626 (ASTM-B124), half hard). COPPER BERYLLIUM 33-25 CuBe2PbH per DIN17666(DIN CEN/TS;DIN SPEC 9700)(QQ-C530). Thermoplast per DIN EN ISO 10350, respectively PEI per in-house specification for higher temperature applications. SILICONE RUBBER per DIN ISO 3601 (A-A-59588,Class IIB) Gr. 50 - 75. BORIUM NITRITE Dielectric for high power applications per in-house specification
Finish for COPPER BERYLLIUM	Center Contacts shall be gold plated to a minimum thickness of .00005-inch in accordance with ASTM-B-488, Type III, Code C, Class 1.25
STAINLESS STEEL	shall be passivated per ASTM-A967
ALUMINUM	Conductive Parts shall have an iridited finish per MIL-DTL-5541 Other parts, such as Coupling Nuts and Back-Bodies shall be anodized per MIL-A-8625.
BRASS	.00003 inch (0.8 µm) min. gold plating per MIL-DTL-45204, or nickel plating per QQ-N-290, as specified.
VARIOUS	Imoloy .0001 inch (2.5 µm) min. plating, consisting of 55% Copper / 20% Zinc / 25% Tin (on special request).
Design	The design shall be such that the outline dimensions in this catalog are met. In addition, the assembled connector shall meet the interface dimensions.
ELECTRICAL	
Frequency Range	DC - 26.5 GHz and DC - 35.0 GHz respectively
Insulation Resistance	Not applicable.
Return Loss (VSWR)	1.03 + 0.005 x f (GHz)
Contact Resistance	The center contact resistance is 0.75 milliohms and the outer contact resistance 0.13 milliohms.
Dielectric Withstanding Voltage	Not applicable.
RF High Potential	Not applicable.
Withstanding Voltage	RF high potential withstanding voltage is is not applicable. Leakage is not applicable.
Shielding effectiveness	100 dB
Insertion Loss	0.30 dB @ 33GHz
MECHANICAL	
Connect/Disconnect Life	3000 cycles
Maximum insertion force	5.6 N
Withdrawal force	4.6 N max.
Coupling torque	1.3 - 1.7 Nm.
Maximum safety torque	TBD Nm
Depth of insertion	1.5 mm
ENVIRONMENTAL	
Corrosion (Salt Spray)	Specification MIL-STD-202, Method 101, Test Condition B. The salt solution shall be 5%.
Vibration	Specification MIL-STD-202, Method 204, Test Condition D.
Shock	Specification MIL-STD-202, Method 213, Test Condition I.
Thermal Shock	Specification MIL-STD-202, Method 107, Test Condition B, except high temperature shall be +70°C when the regular Bead is used, and +170° when the high temperature Bead is used.
Moisture Resistance	Specification MIL-STD-202, Method 106. Step 7b (vibration) shall be omitted. Insulation resistance shall be 200 megohms min. within 5 minutes of removal from humidity.
Corona Level	The Corona Level is not applicable.

Dimensions shown are Inches over Millimeters or vice versa. Standard units have stainless finish (last 2 digits of the P/N are -02). Interfaces are per DIN 47 223, DIN 47 226, IEC 169-4, IEC 169-7, IEC 169-8, IEC 457-2, IEC 60169-5, IEEE 287, MIL-PRF-39012, MIL DTL-24044, MIL DTL-3643,MIL-STD-348B, where applicable

Spectrum Elektrotechnik GmbH
Germany
www.spectrum-et.com
sales@spectrum-et.com
Phone: +49 / 89 / 35 48 04 0
Fax: +49 / 89 / 35 48 04 90

Interface Mating Dimensions 3.5 mm (IEEE 287)

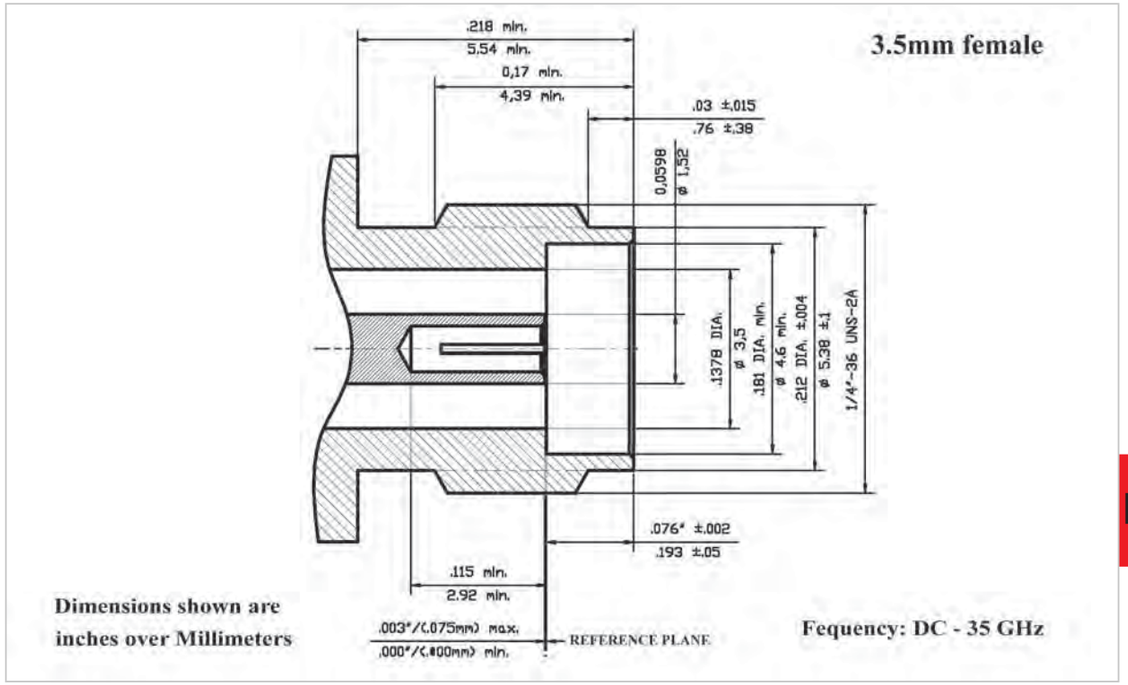

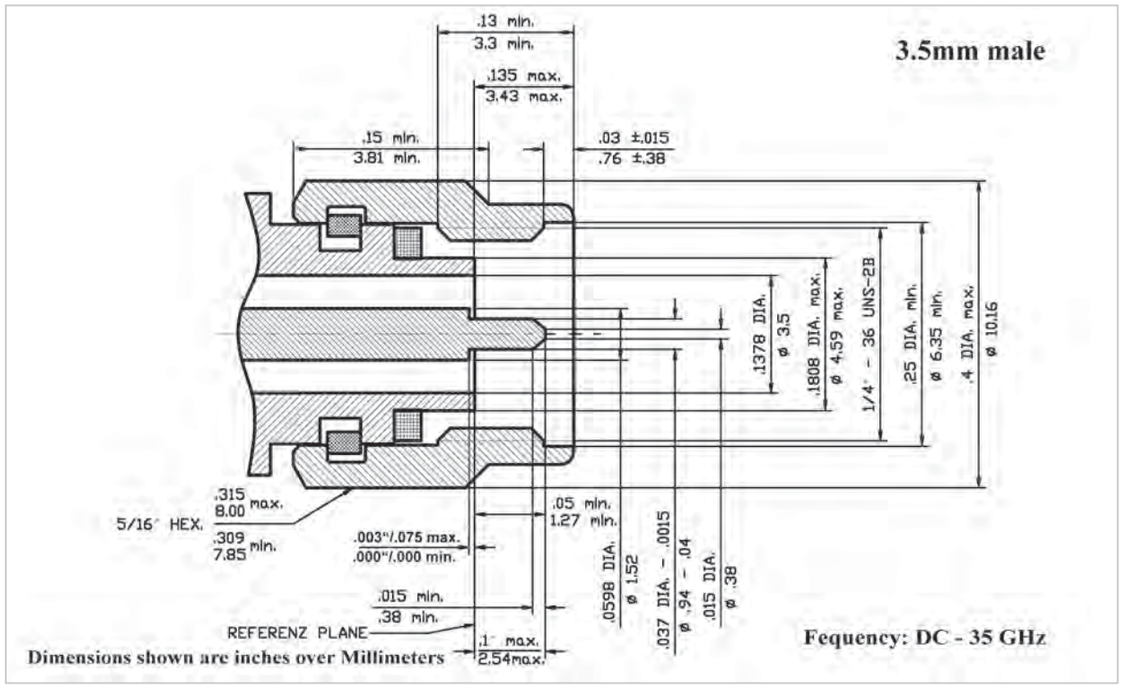

Dimensions shown are Inches over Millimeters or vice versa. Standard units have stainless finish (last 2 digits of the P/N are -02). Interfaces are per DIN 47 223, DIN 47 226, IEC 169-4, IEC 169-7, IEC 169-8, IEC 457-2, IEC 60169-5, IEEE 287, MIL-PRF-39012, MIL DTL-24044, MIL DTL-3643,MIL-STD-348B, where applicable

Spectrum Elektrotechnik GmbH
Germany
www.spectrum-et.com
sales@spectrum-et.com
Phone: +49 / 89 / 35 48 04 0
Fax: +49 / 89 / 35 48 04 90

Part - No.	8001-9292-02
Connectors	3.5mm-fem. to 3.5mm-fem.
Frequency	DC - 26.5 GHz
VSWR max.	1.03 + 0.005 f (GHz)

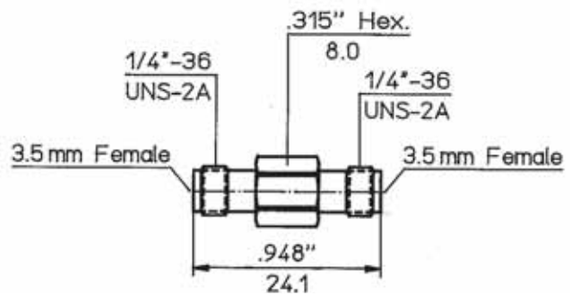

Part - No.	8002-9292-02
Connectors	3.5mm-fem. to 3.5mm-fem.
Frequency	DC - 35.0 GHz
VSWR max.	1.03 + 0.005 f (GHz)

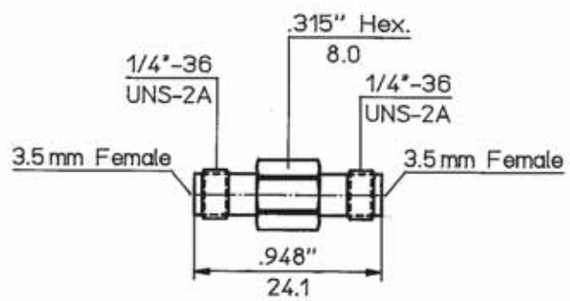

Part - No.	8003-9292-02
Connectors	3.5mm-fem. to 3.5mm-fem.
Frequency	DC - 26.5 GHz
VSWR max.	1.03 + 0.005 f (GHz)

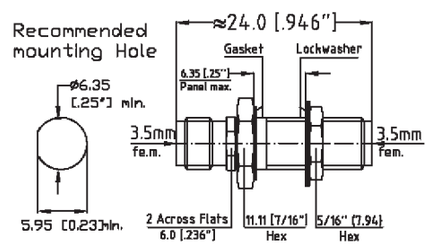

Although our catalog incorporates a very comprehensive range of products, due to our program of continuous development, there is no way that it will contain every product we manufacture. Please consult the factory for the product you require.

Dimensions shown are Inches over Millimeters or vice versa. Standard units have stainless finish (last 2 digits of the P/N are -02). Interfaces are per DIN 47 223, DIN 47 226, IEC 169-4, IEC 169-7, IEC 169-8, IEC 457-2, IEC 60169-5, IEEE 287, MIL-PRF-39012, MIL DTL-24044, MIL DTL-3643,MIL-STD-348B, where applicable

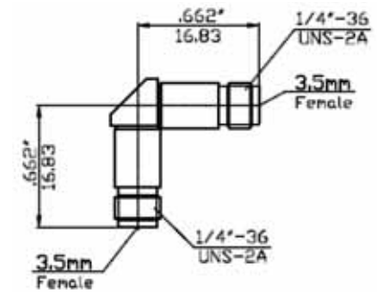

Part - No.	8090-9292-02
Connectors	3.5mm-fem. to 3.5mm-fem.
Frequency	DC - 35.0 GHz
VSWR max.	1.03 + 0.005 f (GHz)

True radius right angle

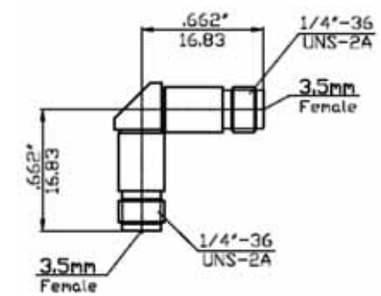

Part - No.	8P90-9292-02
Connectors	3.5mm-fem. to 3.5mm-fem.
Frequency	DC - 35.0 GHz
VSWR max.	1.03 + 0.004 f (GHz)

True radius right angle

Best VSWR

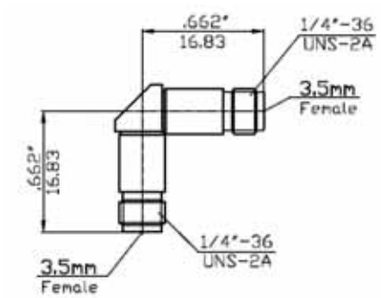

Part - No.	8190-9292-02
Connectors	3.5mm-fem. to 3.5mm-fem.
Frequency	DC - 26.5 GHz
VSWR max.	1.03 + 0.005 f (GHz)

True radius right angle

You do not find the Adapter you need for an application? You need technical support? You need price and delivery information? Please contact your nearest Spectrum Representative, or please contact us direct.

Telephone: +49-89-3548-040 Facsimile: +49-89-3548-0490
e-mail: sales@spectrum-et.com www.spectrum-et.com

Dimensions shown are Inches over Millimeters or vice versa. Standard units have stainless finish (last 2 digits of the P/N are -02). Interfaces are per DIN 47 223, DIN 47 226, IEC 169-4, IEC 169-7, IEC 169-8, IEC 457-2, IEC 60169-5, IEEE 287, MIL-PRF-39012, MIL DTL-24044, MIL DTL-3643,MIL-STD-348B, where applicable

Part - No.	8001-9192-02
Connectors	3.5 mm-male to 3.5 mm-fem.
Frequency	DC - 26.5 GHz
VSWR max.	1.03 + 0.005 f (GHz)

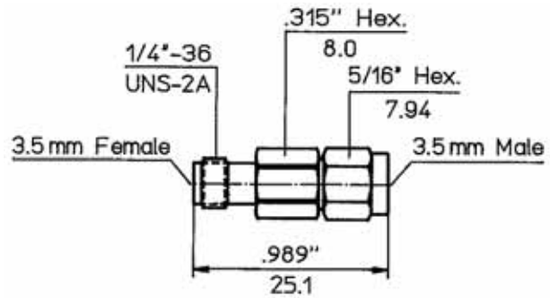

Part - No.	8002-9192-02
Connectors	3.5 mm-male to 3.5 mm-fem.
Frequency	DC - 35.0 GHz
VSWR max.	1.03 + 0.005 f (GHz)

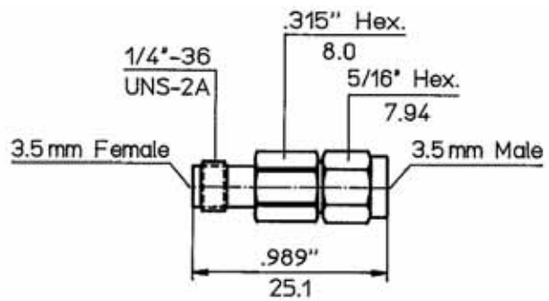

Part - No.	8003-9192-02
Connectors	3.5 mm-male to 3.5 mm-fem.
Frequency	DC - 26.5 GHz
VSWR max.	1.03 + 0.005 f (GHz)

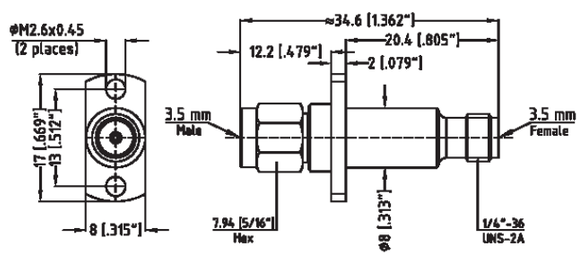

Part - No.	8001-9191-02
Connectors	3.5 mm-male to 3.5 mm-male
Frequency	DC - 26.5 GHz
VSWR max.	1.03 + 0.005 f (GHz)

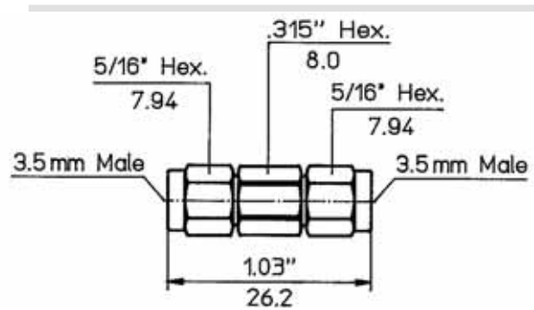

Dimensions shown are Inches over Millimeters or vice versa. Standard units have stainless finish (last 2 digits of the P/N are -02). Interfaces are per DIN 47 223, DIN 47 226, IEC 169-4, IEC 169-7, IEC 169-8, IEC 457-2, IEC 60169-5, IEEE 287, MIL-PRF-39012, MIL DTL-24044, MIL DTL-3643,MIL-STD-348B, where applicable

Spectrum Elektrotechnik GmbH
Germany
www.spectrum-et.com
sales@spectrum-et.com
Phone: +49 / 89 / 35 48 04 0
Fax: +49 / 89 / 35 48 04 90

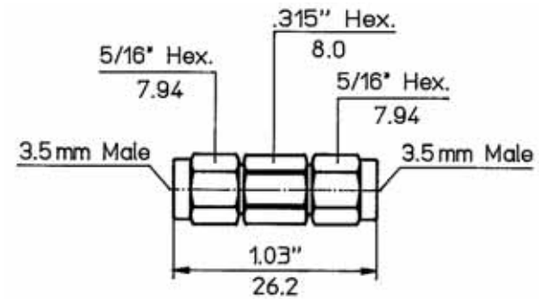

Part - No.	8002-9191-02
Connectors	3.5 mm-male to 3.5 mm-male
Frequency	DC - 35,0 GHz
VSWR max.	1.03 + 0.005 f (GHz)

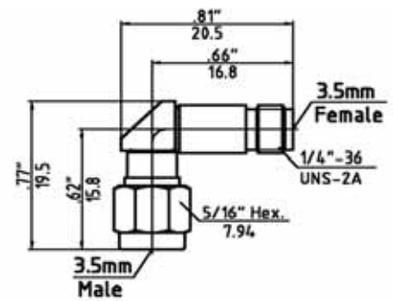

Part - No.	8190-9192-02
Connectors	3.5 mm-male to 3.5 mm-fem.
Frequency	DC - 26,5 GHz
VSWR max.	1.03 + 0.006 f (GHz)

True radius right angle

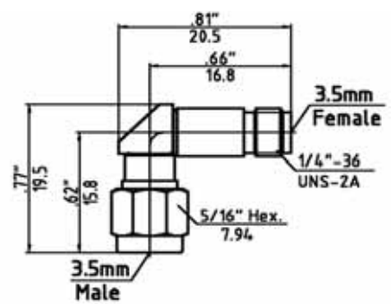

Part - No.	8090-9192-02
Connectors	3.5 mm-male to 3.5 mm-fem.
Frequency	DC - 35.0 GHz
VSWR max.	1.03 + 0.006 f (GHz)

True radius right angle

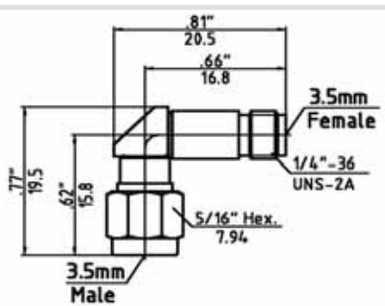

Part - No.	8P90-9192-02
Connectors	3.5 mm-male to 3.5 mm-fem.
Frequency	DC - 35.0 GHz
VSWR max.	1.03 + 0.005 f (GHz)

Best VSWR

True radius right angle

Dimensions shown are Inches over Millimeters or vice versa. Standard units have stainless finish (last 2 digits of the P/N are -02). Interfaces are per DIN 47 223, DIN 47 226, IEC 169-4, IEC 169-7, IEC 169-8, IEC 457-2, IEC 60169-5, IEEE 287, MIL-PRF-39012, MIL DTL-24044, MIL DTL-3643,MIL-STD-348B, where applicable

Spectrum Elektrotechnik GmbH
Germany
www.spectrum-et.com
sales@spectrum-et.com
Phone: +49 / 89 / 35 48 04 0
Fax: +49 / 89 / 35 48 04 90

Part - No.	8090-9191-02
Connectors	3.5 mm-male to 3.5 mm-male
Frequency	DC - 35.0 GHz
VSWR max.	1.03 + 0.006 f (GHz)
	True radius right angle

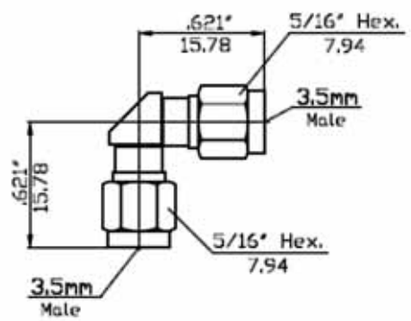

Part - No.	8P90-9191-02
Connectors	3.5 mm-male to 3.5 mm-male
Frequency	DC - 35.0 GHz
VSWR max.	1.03 + 0.005 f (GHz)
	Best VSWR
	True radius right angle

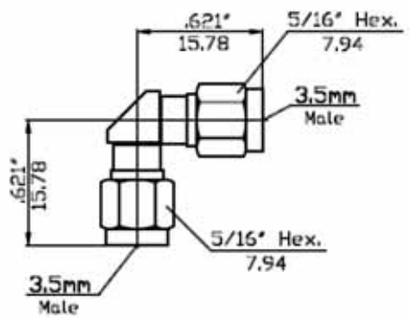

Part - No.	8190-9191-02
Connectors	3.5 mm-male to 3.5 mm-male
Frequency	DC - 26,5 GHz
VSWR max.	1.03 + 0.006 f (GHz)
	True radius right angle

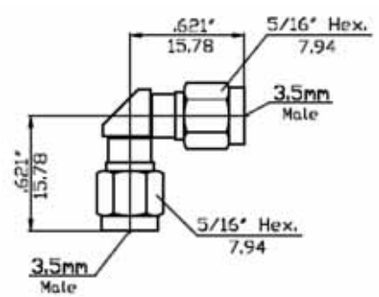

Although our catalog incorporates a very comprehensive range of products, due to our program of continuous development, there is no way that it will contain every product we manufacture. Please consult the factory for the product you require.

Dimensions shown are Inches over Millimeters or vice versa. Standard units have stainless finish (last 2 digits of the P/N are -02). Interfaces are per DIN 47 223, DIN 47 226, IEC 169-4, IEC 169-7, IEC 169-8, IEC 457-2, IEC 60169-5, IEEE 287, MIL-PRF-39012, MIL DTL-24044, MIL DTL-3643,MIL-STD-348B, where applicable

Spectrum Elektrotechnik GmbH
Germany
www.spectrum-et.com
sales@spectrum-et.com
Phone: +49 / 89 / 35 48 04 0
Fax: +49 / 89 / 35 48 04 90

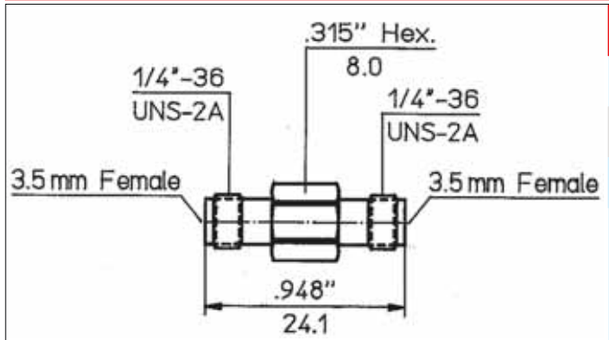

Part - No.	8801-9292-02
Connectors	3.5mm-fem. to 3.5mm-fem.
Frequency	DC - 26.5 GHz
VSWR max.	1.03 + 0.005 f (GHz)

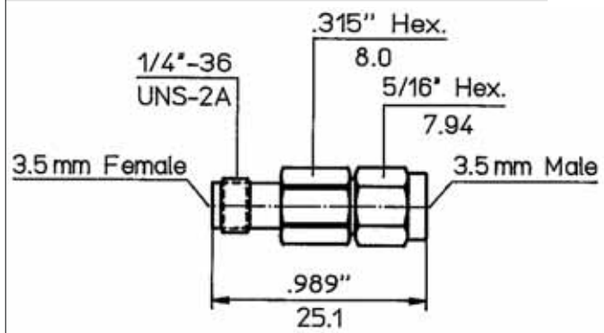

Part - No.	8801-9192-02
Connectors	3.5 mm-male to 3.5 mm-fem.
Frequency	DC - 35.0 GHz
VSWR max.	1.03 + 0.005 f (GHz)

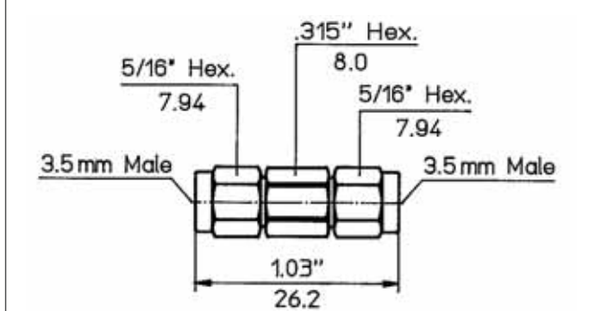

Part - No.	8801-9191-02
Connectors	3.5 mm-male to 3.5 mm-male
Frequency	DC - 35.0 GHz
VSWR max.	1.03 + 0.005 f (GHz)

You do not find the Adapter you need for an application? You need technical support? You need price and delivery information? Please contact your nearest Spectrum Representative, or please contact us direct.

Telephone: +49-89-3548-040 Facsimile: +49-89-3548-0490
e-mail: sales@spectrum-et.com www.spectrum-et.com

Dimensions shown are Inches over Millimeters or vice versa. Standard units have stainless finish (last 2 digits of the P/N are -02). Interfaces are per DIN 47 223, DIN 47 226, IEC 169-4, IEC 169-7, IEC 169-8, IEC 457-2, IEC 60169-5, IEEE 287, MIL-PRF-39012, MIL DTL-24044, MIL DTL-3643,MIL-STD-348B, where applicable

Spectrum Elektrotechnik GmbH
Germany
www.spectrum-et.com
sales@spectrum-et.com
Phone: +49 / 89 / 35 48 04 0
Fax: +49 / 89 / 35 48 04 90

Part - No.	8001-HF92-02
Connectors	3.5 mm-fem. to 2.4mm fem.
Frequency	DC - 35.0 GHz
VSWR max.	1.03 + 0.005 f (GHz)

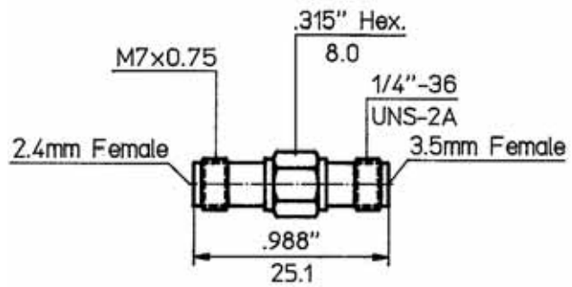

Part - No.	8P01-HF92-02
Connectors	3.5 mm-fem. to 2.4mm fem.
Frequency	DC - 35.0 GHz
VSWR max.	1.03 + 0.004 f (GHz)
	Best VSWR

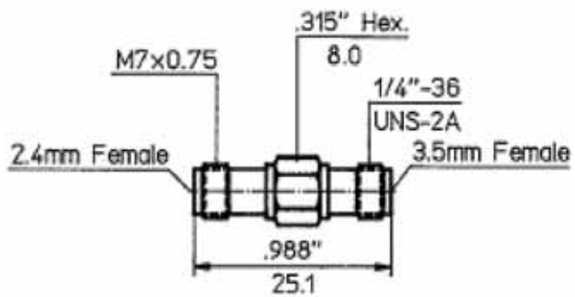

Part - No.	8002-HF92-02
Connectors	3.5 mm-fem. to 2.4mm fem.
Frequency	DC - 26.5 GHz
VSWR max.	1.03 + 0.005 f (GHz)

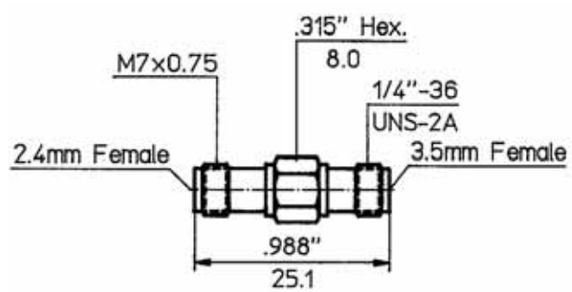

Part - No.	8090-HF92-02
Connectors	3.5 mm-fem. to 2.4mm fem.
Frequency	DC - 35.0 GHz
VSWR max.	1.03 + 0.006 f (GHz)
	True radius right angle

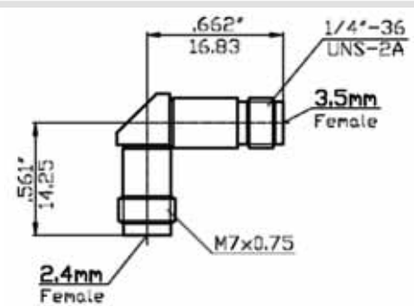

Dimensions shown are Inches over Millimeters or vice versa. Standard units have stainless finish (last 2 digits of the P/N are -02). Interfaces are per DIN 47 223, DIN 47 226, IEC 169-4, IEC 169-7, IEC 169-8, IEC 457-2, IEC 60169-5, IEEE 287, MIL-PRF-39012, MIL DTL-24044, MIL DTL-3643,MIL-STD-348B, where applicable

Spectrum Elektrotechnik GmbH
Germany
www.spectrum-et.com
sales@spectrum-et.com
Phone: +49 / 89 / 35 48 04 0
Fax: +49 / 89 / 35 48 04 90

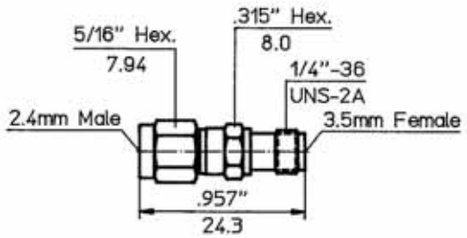

Part - No.	8001-HM92-02
Connectors	3.5 mm-fem. to 2.4mm-male
Frequency	DC - 35.0 GHz
VSWR max.	1.03 + 0.005 f (GHz)

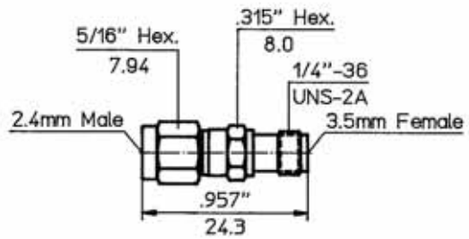

Part - No.	8P01-HM92-02
Connectors	3.5 mm-fem. to 2.4mm-male
Frequency	DC - 35.0 GHz
VSWR max.	1.03 + 0.004 f (GHz)
	Best VSWR

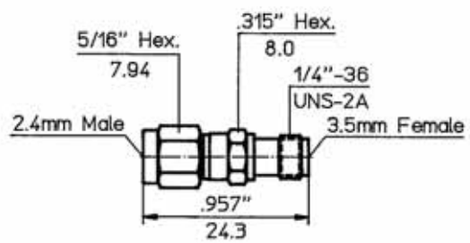

Part - No.	8002-HM92-02
Connectors	3.5 mm-fem. to 2.4mm-male
Frequency	DC - 26.5 GHz
VSWR max.	1.03 + 0.005 f (GHz)

You do not find the Adapter you need for an application? You need technical support? You need price and delivery information? Please contact your nearest Spectrum Representative, or please contact us direct.

Telephone: +49-89-3548-040 Facsimile: +49-89-3548-0490
e-mail: sales@spectrum-et.com www.spectrum-et.com

Dimensions shown are Inches over Millimeters or vice versa. Standard units have stainless finish (last 2 digits of the P/N are -02). Interfaces are per DIN 47 223, DIN 47 226, IEC 169-4, IEC 169-7, IEC 169-8, IEC 457-2, IEC 60169-5, IEEE 287, MIL-PRF-39012, MIL DTL-24044, MIL DTL-3643,MIL-STD-348B, where applicable

Spectrum Elektrotechnik GmbH
Germany
www.spectrum-et.com
sales@spectrum-et.com
Phone: +49 / 89 / 35 48 04 0
Fax: +49 / 89 / 35 48 04 90

Part - No.	8090-HM92-02
Connectors	3.5 mm-fem. to 2.4mm-male
Frequency	DC - 35.0 GHz
VSWR max.	1.03 + 0.006 f (GHz)
	True radius right angle

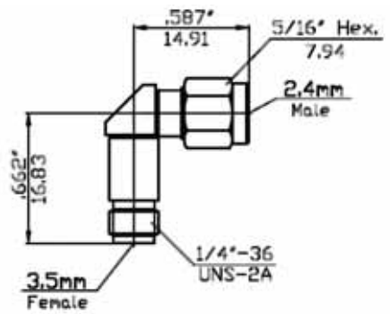

Part - No.	8190-HM92-02
Connectors	3.5 mm-fem. to 2.4mm-male
Frequency	DC - 26.5 GHz
VSWR max.	1.03 + 0.006 f (GHz)
	True radius right angle

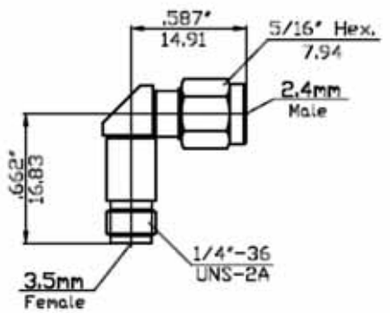

Part - No.	8001-HF91-02
Connectors	3.5 mm-male to 2.4mm-fem.
Frequency	DC - 35.0 GHz
VSWR max.	1.03 + 0.005 f (GHz)

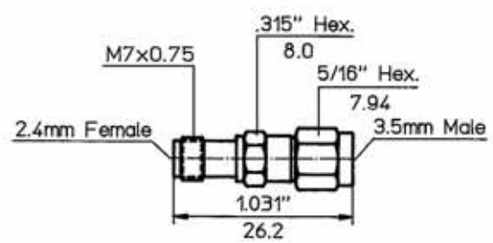

Part - No.	8002-HF91-02
Connectors	3.5 mm-male to 2.4mm-fem.
Frequency	DC - 26.5 GHz
VSWR max.	1.03 + 0.005 f (GHz)

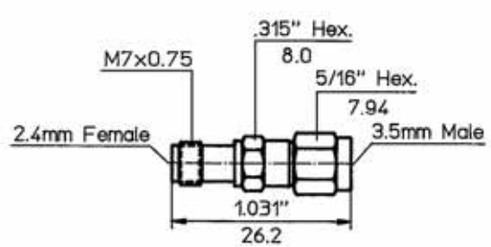

Dimensions shown are Inches over Millimeters or vice versa. Standard units have stainless finish (last 2 digits of the P/N are -02). Interfaces are per DIN 47 223, DIN 47 226, IEC 169-4, IEC 169-7, IEC 169-8, IEC 457-2, IEC 60169-5, IEEE 287, MIL-PRF-39012, MIL DTL-24044, MIL DTL-3643,MIL-STD-348B, where applicable

Spectrum Elektrotechnik GmbH
Germany
www.spectrum-et.com
sales@spectrum-et.com
Phone: +49 / 89 / 35 48 04 0
Fax: +49 / 89 / 35 48 04 90

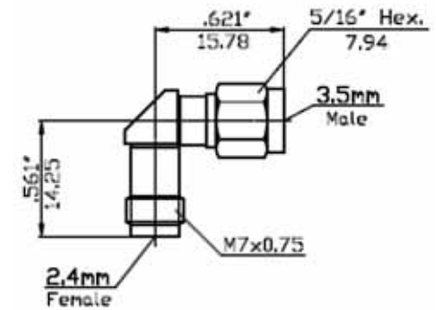

Part - No.	8090-HF91-02
Connectors	3.5 mm-male to 2.4mm-fem.
Frequency	DC - 35.0 GHz
VSWR max.	1.03 + 0.006 f (GHz)
	True radius right angle

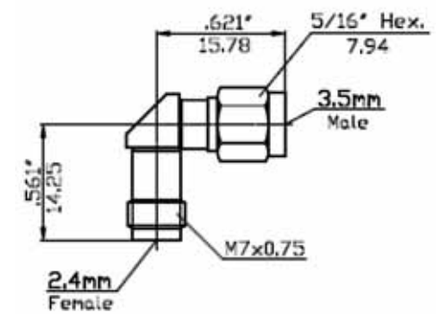

Part - No.	8190-HF91-02
Connectors	3.5 mm-male to 2.4mm-fem.
Frequency	DC - 26.5 GHz
VSWR max.	1.03 + 0.006 f (GHz)
	True radius right angle

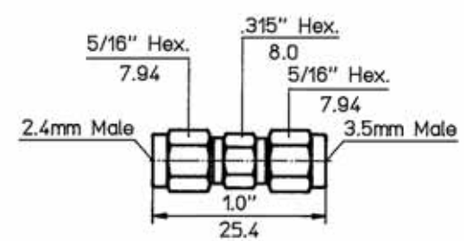

Part - No.	8001-HM91-02
Connectors	3.5 mm-male to 2.4mm-male
Frequency	DC - 35.0 GHz
VSWR max.	1.03 + 0.005 f (GHz)

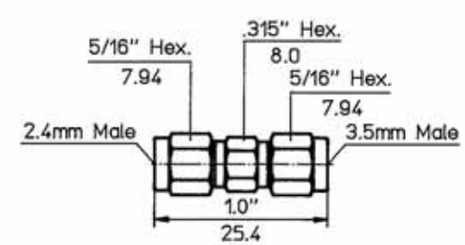

Part - No.	8002-HM91-02
Connectors	3.5 mm-male to 2.4mm-male
Frequency	DC - 26.5 GHz
VSWR max.	1.03 + 0.005 f (GHz)

Dimensions shown are Inches over Millimeters or vice versa. Standard units have stainless finish (last 2 digits of the P/N are -02). Interfaces are per DIN 47 223, DIN 47 226, IEC 169-4, IEC 169-7, IEC 169-8, IEC 457-2, IEC 60169-5, IEEE 287, MIL-PRF-39012, MIL DTL-24044, MIL DTL-3643,MIL-STD-348B, where applicable

Spectrum Elektrotechnik GmbH
Germany
www.spectrum-et.com
sales@spectrum-et.com
Phone: +49 / 89 / 35 48 04 0
Fax: +49 / 89 / 35 48 04 90

Part - No.	8090-HM91-02
Connectors	3.5 mm-male to 2.4mm-male
Frequency	DC - 35.0 GHz
VSWR max.	1.03 + 0.005 f (GHz)
	True radius right angle

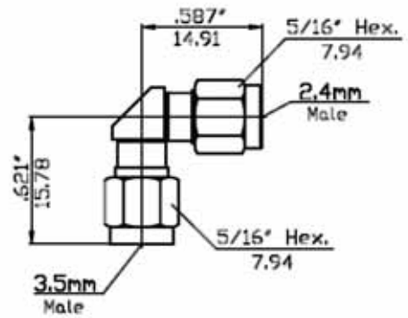

Part - No.	8190-HM91-02
Connectors	3.5 mm-male to 2.4mm-male
Frequency	DC - 26.5 GHz
VSWR max.	1.03 + 0.005 f (GHz)
	True radius right angle

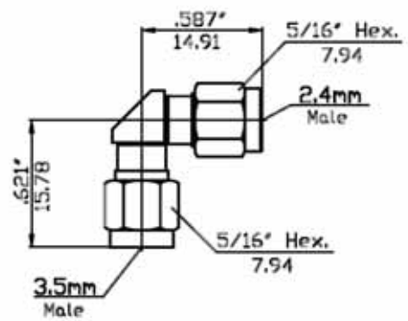

Dimensions shown are Inches over Millimeters or vice versa. Standard units have stainless finish (last 2 digits of the P/N are -02). Interfaces are per DIN 47 223, DIN 47 226, IEC 169-4, IEC 169-7, IEC 169-8, IEC 457-2, IEC 60169-5, IEEE 287, MIL-PRF-39012, MIL DTL-24044, MIL DTL-3643,MIL-STD-348B, where applicable

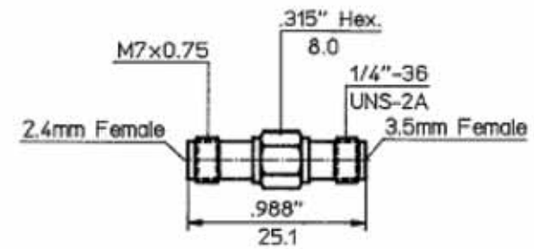

Part - No.	8801-HF92-02
Connectors	3.5 mm-fem. to 2.4mm-fem.
Frequency	DC - 35.0 GHz
VSWR max.	1.03 + 0.005 f (GHz)

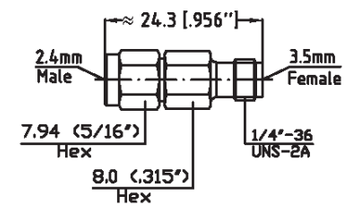

Part - No.	8801-HM92-02
Connectors	3.5 mm-fem. to 2.4mm-male
Frequency	DC -35.0 GHz
VSWR max.	1.03 + 0.005 f (GHz)

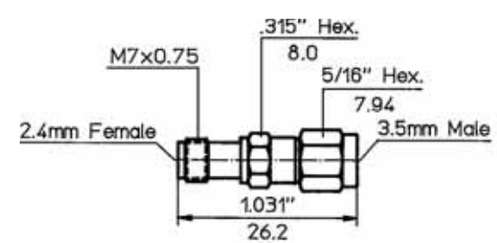

Part - No.	8801-HF91-02
Connectors	3.5 mm-male to 2.4mm-fem.
Frequency	DC - 35.0 GHz
VSWR max.	1.03 + 0.005 f (GHz)

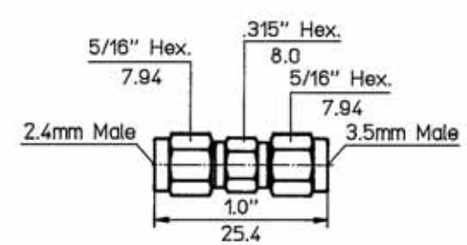

Part - No.	8801-HM91-02
Connectors	3.5 mm-male to 2.4mm-male
Frequency	DC - 35.0 GHz
VSWR max.	1.03 + 0.005 f (GHz)

Dimensions shown are Inches over Millimeters or vice versa. Standard units have stainless finish (last 2 digits of the P/N are -02). Interfaces are per DIN 47 223, DIN 47 226, IEC 169-4, IEC 169-7, IEC 169-8, IEC 457-2, IEC 60169-5, IEEE 287, MIL-PRF-39012, MIL DTL-24044, MIL DTL-3643,MIL-STD-348B, where applicable

Part - No.	8001-KF92-02
Connectors	3.5 mm-fem. to 2.92mm-fem.
Frequency	DC - 35.0 GHz
VSWR max.	1.03 + 0.005 f (GHz)

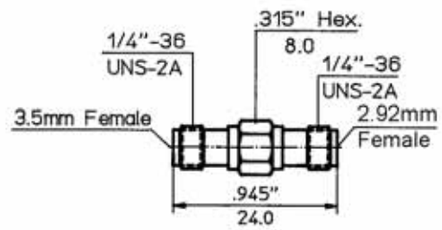

Part - No.	8P01-KF92-02
Connectors	3.5 mm-fem. to 2.92mm-fem.
Frequency	DC - 35.0 GHz
VSWR max.	1.03 + 0.004 f (GHz)
	Best VSWR

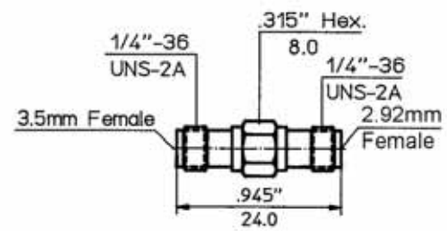

Part - No.	8090-KF92-02
Connectors	3.5 mm-fem. to 2.92mm-fem.
Frequency	DC - 35.0 GHz
VSWR max.	1.03 + 0.006 f (GHz)
	True radius right angle

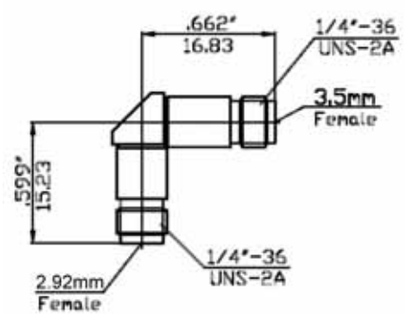

Part - No.	8190-KF92-02
Connectors	3.5 mm-fem. to 2.92mm-fem.
Frequency	DC - 26.5 GHz
VSWR max.	1.03 + 0.006 f (GHz)
	True radius right angle

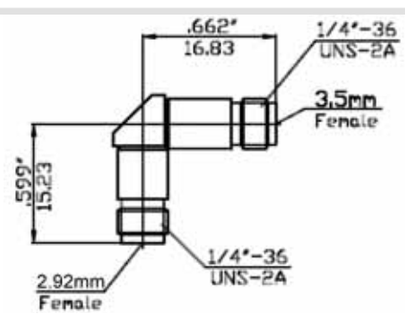

Dimensions shown are Inches over Millimeters or vice versa. Standard units have stainless finish (last 2 digits of the P/N are -02). Interfaces are per DIN 47 223, DIN 47 226, IEC 169-4, IEC 169-7, IEC 169-8, IEC 457-2, IEC 60169-5, IEEE 287, MIL-PRF-39012, MIL DTL-24044, MIL DTL-3643,MIL-STD-348B, where applicable

Spectrum Elektrotechnik GmbH
Germany
www.spectrum-et.com
sales@spectrum-et.com
Phone: +49 / 89 / 35 48 04 0
Fax: +49 / 89 / 35 48 04 90

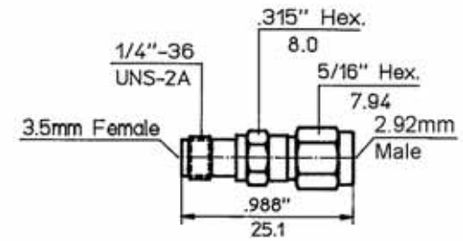

Part - No.	8001-KM92-02
Connectors	3.5 mm-fem. to 2.92mm-male
Frequency	DC - 35.0 GHz
VSWR max.	1.03 + 0.005 f (GHz)

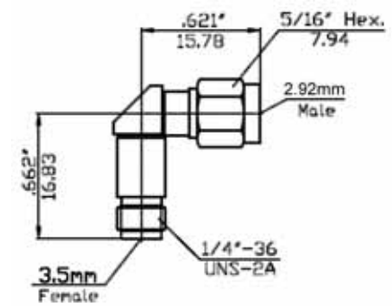

Part - No.	8090-KM92-02
Connectors	3.5 mm-fem. to 2.92mm-male
Frequency	DC - 35.0 GHz
VSWR max.	1.03 + 0.006 f (GHz)
	True radius right angle

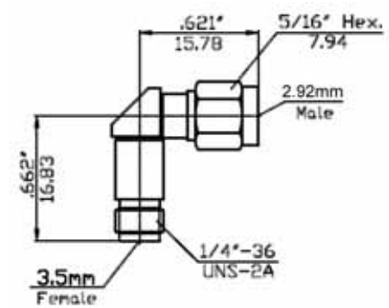

Part - No.	8190-KM92-02
Connectors	3.5 mm-fem. to 2.92mm-male
Frequency	DC - 26.5 GHz
VSWR max.	1.03 + 0.006 f (GHz)
	True radius right angle

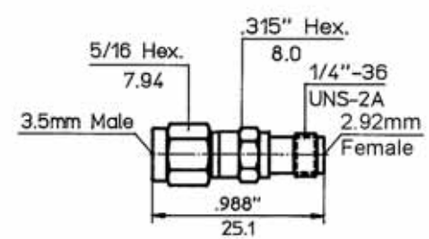

Part - No.	8001-KF91-02
Connectors	3.5 mm-male to 2.92mm-fem.
Frequency	DC - 35.0 GHz
VSWR max.	1.03 + 0.005 f (GHz)

Dimensions shown are Inches over Millimeters or vice versa. Standard units have stainless finish (last 2 digits of the P/N are -02). Interfaces are per DIN 47 223, DIN 47 226, IEC 169-4, IEC 169-7, IEC 169-8, IEC 457-2, IEC 60169-5, IEEE 287, MIL-PRF-39012, MIL DTL-24044, MIL DTL-3643,MIL-STD-348B, where applicable

Spectrum Elektrotechnik GmbH
Germany
www.spectrum-et.com
sales@spectrum-et.com
Phone: +49 / 89 / 35 48 04 0
Fax: +49 / 89 / 35 48 04 90

Part - No.	8P01-KF91-02
Connectors	3.5 mm-male to 2.92mm-fem.
Frequency	DC - 35.0 GHz
VSWR max.	1.03 + 0.004 f (GHz)

Best VSWR

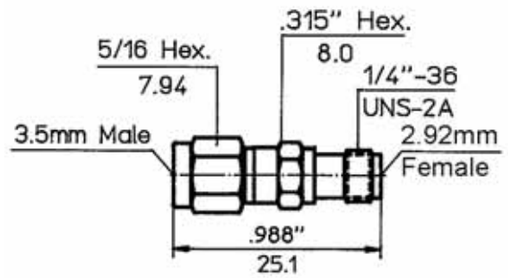

Part - No.	8002-KF91-02
Connectors	3.5 mm-male to 2.92mm-fem.
Frequency	DC - 26.5 GHz
VSWR max.	1.03 + 0.005 f (GHz)

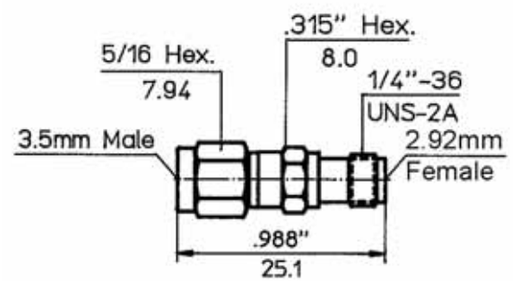

Part - No.	8001-KM91-02
Connectors	3.5 mm-male to 2.92mm-male
Frequency	DC - 35.0 GHz
VSWR max.	1.03 + 0.005 f (GHz)

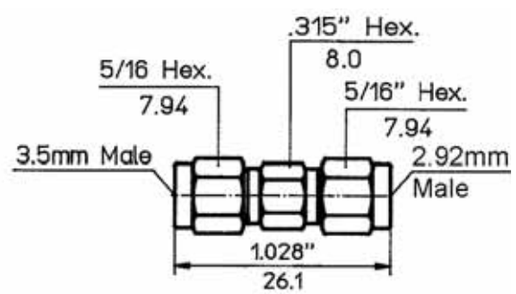

Part - No.	8002-KM91-02
Connectors	3.5 mm-male to 2.92mm-male
Frequency	DC - 26.5 GHz
VSWR max.	1.03 + 0.005 f (GHz)

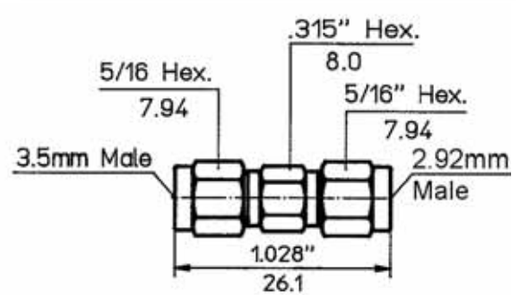

Dimensions shown are Inches over Millimeters or vice versa. Standard units have stainless finish (last 2 digits of the P/N are -02). Interfaces are per DIN 47 223, DIN 47 226, IEC 169-4, IEC 169-7, IEC 169-8, IEC 457-2, IEC 60169-5, IEEE 287, MIL-PRF-39012, MIL DTL-24044, MIL DTL-3643,MIL-STD-348B, where applicable

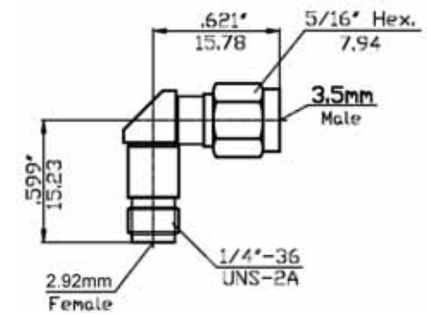

Part - No.	8090-KF91-02
Connectors	3.5 mm-male to 2.92mm-fem.
Frequency	DC - 35.0 GHz
VSWR max.	1.03 + 0.006 f (GHz)

True radius right angle

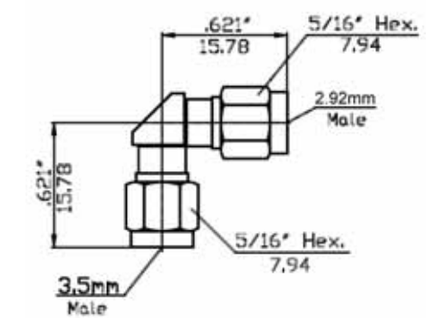

Part - No.	8090-KM91-02
Connectors	3.5 mm-male to 2.92mm-male
Frequency	DC - 35.0 GHz
VSWR max.	1.03 + 0.006 f (GHz)

True radius right angle

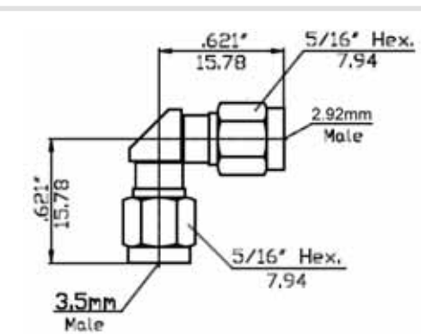

Part - No.	8190-KM91-02
Connectors	3.5 mm-male to 2.92mm-male
Frequency	DC - 26.5 GHz
VSWR max.	1.03 + 0.006 f (GHz)

True radius right angle

You do not find the Adapter you need for an application? You need technical support? You need price and delivery information? Please contact your nearest Spectrum Representative, or please contact us direct.

Telephone: +49-89-3548-040 Facsimile: +49-89-3548-0490
e-mail: sales@spectrum-et.com www.spectrum-et.com

Dimensions shown are Inches over Millimeters or vice versa. Standard units have stainless finish (last 2 digits of the P/N are -02). Interfaces are per DIN 47 223, DIN 47 226, IEC 169-4, IEC 169-7, IEC 169-8, IEC 457-2, IEC 60169-5, IEEE 287, MIL-PRF-39012, MIL DTL-24044, MIL DTL-3643,MIL-STD-348B, where applicable

Hermetically Sealed Connectors at Section EE

Hermeticity 10^{-4} and 10^{-8} atm.cm³/s

Seal your components with our Hermetic Connectors

Spectrum Elektrotechnik GmbH when Quality is needed

80905 Munich, Germany
P.O. Box 450533
Telephone: +49-89-3548-040
Facsimile: +49-89-3548-0490
WWW.SPECTRUM-ET.COM
Email: sales@spectrum-et.com

D

In-Series and Between-Series Adapters 7mm

If your choice of 7mm Adapter is not shown in this section, please refer to the Table below to determine other possible locations. Should you not find your adapter listed in any section, please consult the factory or your Spectrum Elektrotechnik Area Representative.

7 mm	Section	Page
7mm Overview & Specifications	E	1
7mm In-Series		4
Between Series 7mm to 2.4mm		5
Between Series 7mm to 2.92mm		6
Between Series 7mm to 3.5mm		8
Between Series 7mm to C		10
Between Series 7mm to SC		11
Between Series 7mm to N		12
Between Series 7mm to N of equal el. lengths		13
Between Series 7mm to SMA		14
Between Series 7mm to TNC		16
Between Series 7mm to SMP	R	15
Between Series 7mm to 2.4mm NMD	CC	5
Between Series 7mm to 2.92mm NMD		9
Between Series 7mm to 3.5mm NMD		12
Between Series 7mm to 2/5.5	FF	12
Between Series 7mm to TNX	Z	6

Although our catalog incorporates a very comprehensive range of products, due to our program of continuous development, there is no way that it will contain every product we manufacture. Please consult the factory for the product you require.
To improve our Standard Products we reserve the right to make changes. Specifications are therefore subject to change without notice.

Dimensions shown are Inches over Millimeters or vice versa. Standard units have stainless finish (last 2 digits of the P/N are -02). Interfaces are per DIN 47 223, DIN 47 226, IEC 169-4, IEC 169-7, IEC 169-8, IEC 457-2, IEC 60169-5, IEEE 287, MIL-PRF-39012, MIL DTL-24044, MIL DTL-3643,MIL-STD-348B, where applicable

7 mm Specifications to IEC 457-2

The specifications below are general specifications for all 7 mm connectors. Specific Data for VSWR, Insertion Loss, R.F. leakage, etc., are available from the factory upon request. Specifications in the following table are recommended for any procurement documents or drawings. In the event of any conflict between these specifications and General Specifications IEC 457-2, these specifications shall govern. These specifications are subject to change according to the latest revision.

REQUIREMENT	GENERAL SPECIFICATIONS
Standard Materials	STEEL corrosion resistant 1.4305 per DIN EN 10088; ASTM-A582 (303), or 1.4404 (316L) respectively. ALUMINUM AlMg4.5Mn per DIN DIN EN 1706, AlMgSi0.5 per DIN EN 1706, AlMgSi1 per DIN EN 1706 (6061-T6 per QQ-A-225/8). BRASS CuZn39Pb3 per DIN 17660 (QQ-B-626 (ASTM-B124), half hard). COPPER BERYLLIUM 33-25 CuBe2PbH per DIN17666(DIN CEN/TS;DIN SPEC 9700)(QQ-C530). Thermoplast per DIN EN ISO 10350, respectively PEI per in-house specification for higher temperature applications. TFE Fluorocarbon per DIN 52900 (ASTM-D-1710) SILICONE RUBBER per DIN ISO 3601 (A-A-59588,Class IIB) Gr. 50 - 75. BORIUM NITRITE Dielectric for high power applications per in-house specification
Finish for COPPER BERYLLIUM STAINLESS STEEL ALUMINUM BRASS VARIOUS	Center Contacts shall be gold plated to a minimum thickness of .00005-inch in accordance with ASTM-B-488, Type III, Code C, Class 1.25 shall be passivated per ASTM-B-488, Type III, Code C, Class 1.25 Conductive Parts shall have an iridited finish per MIL-DTL-5541 Other parts, such as Coupling Nuts and Back-Bodies shall be anodized per MIL-A-8625. .00003 inch (0.8 µm) min. gold plating per MIL-DTL-45204, or nickel plating per QQ-N-290, as specified. Imoloy .0001 inch (2.5 µm) min. plating, consisting of 55% Copper / 20% Zinc / 25% Tin (on special request).
Design	The design shall be such that the outline dimensions in this catalog are met. In addition, the assembled connector shall meet the interface dimensions.
ELECTRICAL	
Frequency Range Insulation Resistance Voltage Standing Wave Ratio (VSWR) Contact Resistance Dielectric Withstanding Voltage RF High Potential Withstanding Voltage RF Leakage Insertion Loss	DC - 18.0 GHz min. The insulation resistance is not applicable. 1.03 + .003 * f (GHz) The center contact resistance drop shall not exceed 1.0 milliohms and the outer contact resistance drop shall not exceed 0.1 milliohms. The magnitude of the test voltage shall be 2,500 volts rms at sea level. The RF high potential withstanding voltage is 1,000 volts rms at 5 MHz. Leakage is not applicable. - (120 - f (GHz)) dB (.007 SQT(f(GHz))) dB
MECHANICAL	
Connector Durability Cable Retention Force Coupling Nut Retention Force Force to Engage and Disengage Longitudinal Force max. Mating Characteristics Recommended Mating Torque	The connector is to be tested and its mating connector shall be subjected to 5000 insertions. Withdrawal cycles not applicable. The connector shall show no evidence of mechanical failure and the connector shall meet the mating characteristic requirements. Cable Retention Force is not applicable. Coupling Nut Retention Force is not applicable. Force to Engage and Disengage is not applicable. Longitudinal force is not applicable. Mating Characteristics are not applicable. 16 - 29 inch-pounds (1.8 - 3.3 Nm)
ENVIRONMENTAL	
Corrosion (Salt Spray) Vibration Shock Thermal Shock Moisture Resistance Corona Level	Specification MIL-STD-202, Method 101, Test Condition B. The salt solution shall be 5%. Specification MIL-STD-202, Method 204, Test Condition B. Specification MIL-STD-202, Method 213, Test Condition I. Specification MIL-STD-202, Method 107, Test Condition B, except high temperature shall be +70°C when the regular Bead is used, and +170° when the high temperature Bead is used. Specification MIL-STD-202, Method 106. Step 7b (vibration) shall be omitted. Insulation resistance shall be 200 megohms min. within 5 minutes of removal from humidity. Corona Level is not applicable.

Dimensions shown are Inches over Millimeters or vice versa. Standard units have stainless finish (last 2 digits of the P/N are -02). Interfaces are per DIN 47 223, DIN 47 226, IEC 169-4, IEC 169-7, IEC 169-8, IEC 457-2, IEC 60169-5, IEEE 287, MIL-PRF-39012, MIL DTL-24044, MIL DTL-3643,MIL-STD-348B, where applicable

Spectrum Elektrotechnik GmbH
Germany
www.spectrum-et.com
sales@spectrum-et.com
Phone: +49 / 89 / 35 48 04 0
Fax: +49 / 89 / 35 48 04 90

Interface Mating Dimensions (Per IEC 457-2) 7 mm

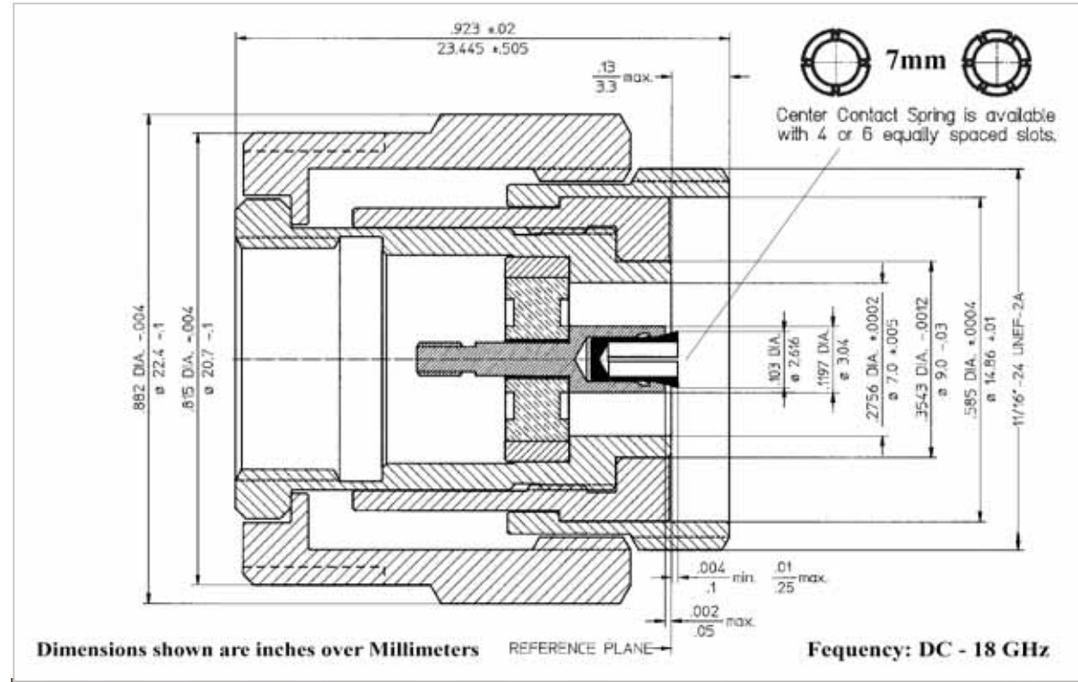

Dimensions shown are Inches over Millimeters or vice versa. Standard units have stainless finish (last 2 digits of the P/N are -02). Interfaces are per DIN 47 223, DIN 47 226, IEC 169-4, IEC 169-7, IEC 169-8, IEC 457-2, IEC 60169-5, IEEE 287, MIL-PRF-39012, MIL DTL-24044, MIL DTL-3643,MIL-STD-348B, where applicable

Spectrum Elektrotechnik GmbH
Germany
www.spectrum-et.com
sales@spectrum-et.com
Phone: +49 / 89 / 35 48 04 0
Fax: +49 / 89 / 35 48 04 90

Part - No.	8001-9090-02
Connectors	**7 mm to 7 mm**
Frequency	DC - 18.0 GHz
VSWR max.	1.03 + 0.003 x f(GHz)

The Center Conductor of the 7 mm Connector is supplied with 4 slots. If you require 6 slots, Part Number changes to: **8001 - 9696 - 02**

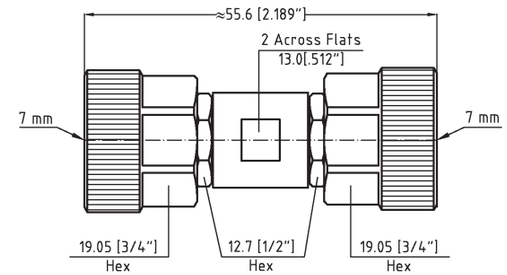

Part - No.	8U01-9090-02
Connectors	**7 mm to 7 mm**
Frequency	DC - 18.0 GHz
VSWR max.	1.03 + 0.003 x f(GHz)

Higher temperature applications

The Center Conductor of the 7 mm Connector is supplied with 4 slots. If you require 6 slots, Part Number changes to: **8U01 - 9696 - 02**

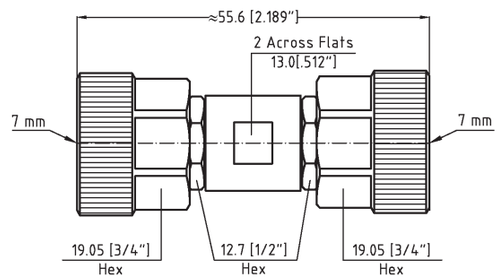

Part - No.	8001-9090-03
Connectors	**7 mm to 7 mm**
Frequency	DC - 18.0 GHz
VSWR max.	1.03 + 0.003 x f(GHz)

Outer Conductor is gold plated brass

The Center Conductor of the 7 mm Connector is supplied with 4 slots. If you require 6 slots, Part Number changes to: **8001 - 9696 - 03**

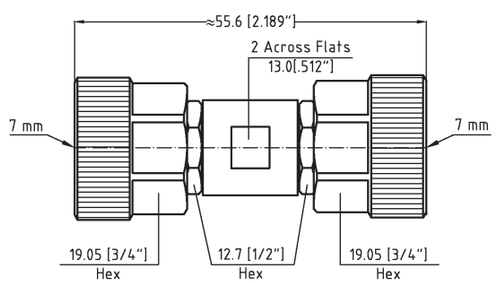

You do not find the Adapter you need for an application? You need technical support? You need price and delivery information? Please contact your nearest Spectrum Representative, or please contact us direct.

Telephone: +49-89-3548-040 Facsimile: +49-89-3548-0490
e-mail: sales@spectrum-et.com www.spectrum-et.com

Dimensions shown are Inches over Millimeters or vice versa. Standard units have stainless finish (last 2 digits of the P/N are -02). Interfaces are per DIN 47 223, DIN 47 226, IEC 169-4, IEC 169-7, IEC 169-8, IEC 457-2, IEC 60169-5, IEEE 287, MIL-PRF-39012, MIL DTL-24044, MIL DTL-3643,MIL-STD-348B, where applicable

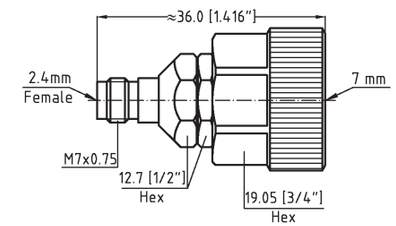

Part - No.	8001-HF90-02
Connectors	**7mm to 2.4 mm-f**
Frequency	DC - 18.0 GHz
VSWR max.	1.03 + 0.003 x f(GHz)

The Center Conductor of the 7 mm Connector is supplied with 4 slots. If you require 6 slots, Part Number changes to: **8001 - HF96 - 02**

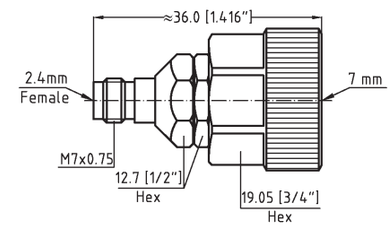

Part - No.	8001-HF96-02
Connectors	**7mm to 2.4 mm-f**
Frequency	DC - 18.0 GHz
VSWR max.	1.03 + 0.003 x f(GHz)

The 7mm connector uses a 6-slotted contact

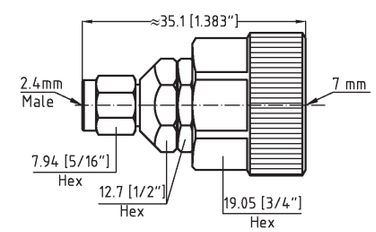

Part - No.	8001-HM90-02
Connectors	**7mm to 2.4 mm-m**
Frequency	DC - 18.0 GHz
VSWR max.	1.03 + 0.003 x f(GHz)

The Center Conductor of the 7 mm Connector is supplied with 4 slots. If you require 6 slots, Part Number changes to: **8001 - HM96 - 02**

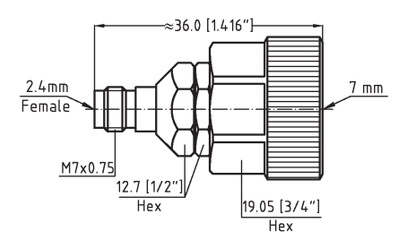

Part - No.	8001-HM96-02
Connectors	**7mm to 2.4 mm-m**
Frequency	DC - 18.0 GHz
VSWR max.	1.03 + 0.003 x f(GHz)

The 7mm connector uses a 6-slotted contact

Dimensions shown are Inches over Millimeters or vice versa. Standard units have stainless finish (last 2 digits of the P/N are -02). Interfaces are per DIN 47 223, DIN 47 226, IEC 169-4, IEC 169-7, IEC 169-8, IEC 457-2, IEC 60169-5, IEEE 287, MIL-PRF-39012, MIL DTL-24044, MIL DTL-3643,MIL-STD-348B, where applicable

Part - No.	8001-KF90-02
Connectors	7mm to 2.92 mm-f
Frequency	DC - 18.0 GHz
VSWR max.	1.03 + 0.003 x f(GHz)

The Center Conductor of the 7 mm Connector is supplied with 4 slots. If you require 6 slots, Part Number changes to: **8001 - KF96 - 02**

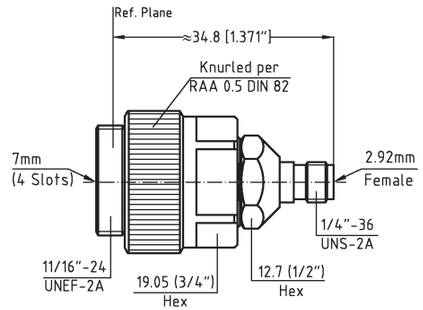

Part - No.	8001-KF96-02
Connectors	7mm to 2.92 mm-f
Frequency	DC - 18.0 GHz
VSWR max.	1.03 + 0.003 x f(GHz)

The 7mm connector uses a 6-slotted contact

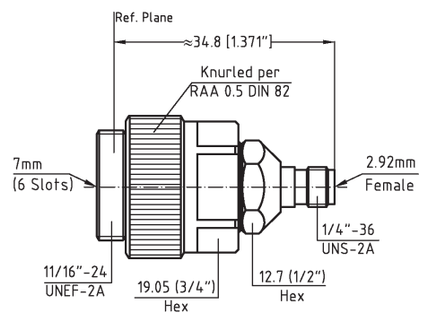

Part - No.	8001-KM90-02
Connectors	7mm to 2.92 mm-m
Frequency	DC - 18.0 GHz
VSWR max.	1.03 + 0.003 x f(GHz)

The Center Conductor of the 7 mm Connector is supplied with 4 slots. If you require 6 slots, Part Number changes to: **8001 - KM96 - 02**

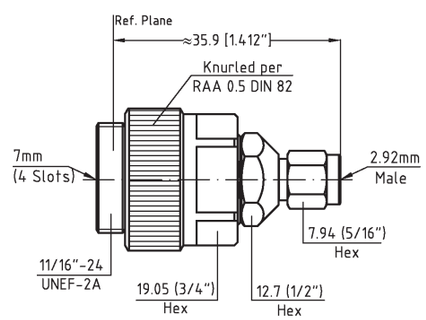

Part - No.	8001-KM96-02
Connectors	7mm to 2.92 mm-m
Frequency	DC - 18.0 GHz
VSWR max.	1.03 + 0.003 x f(GHz)

The 7mm connector uses a 6-slotted contact

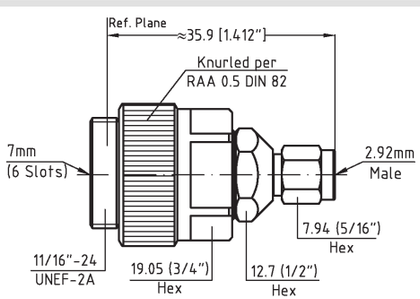

Dimensions shown are Inches over Millimeters or vice versa. Standard units have stainless finish (last 2 digits of the P/N are -02). Interfaces are per DIN 47 223, DIN 47 226, IEC 169-4, IEC 169-7, IEC 169-8, IEC 457-2, IEC 60169-5, IEEE 287, MIL-PRF-39012, MIL DTL-24044, MIL DTL-3643,MIL-STD-348B, where applicable

Spectrum Elektrotechnik GmbH
Germany
www.spectrum-et.com
sales@spectrum-et.com
Phone: +49 / 89 / 35 48 04 0
Fax: +49 / 89 / 35 48 04 90

Adapters of equal electrical length 7mm to 2.92mm

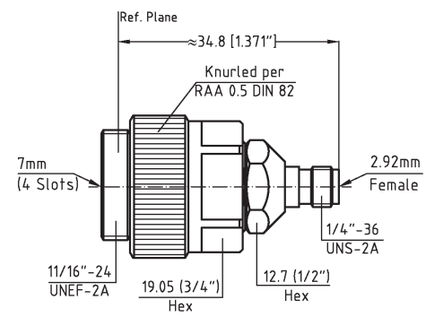

Part - No.	8801-KF90-02
Connectors	7mm to 2.92 mm-f
Frequency	DC - 18.0 GHz
VSWR max.	1.03 + 0.003 x f(GHz)

The Center Conductor of the 7 mm Connector is supplied with 4 slots. If you require 6 slots, Part Number changes to: **8801 - KF96 - 02**

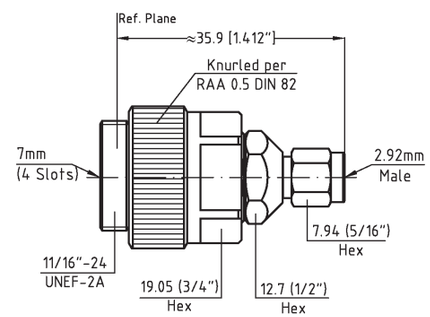

Part - No.	8801-KM90-02
Connectors	7mm to 2.92 mm-m
Frequency	DC - 18.0 GHz
VSWR max.	1.03 + 0.003 x f(GHz)

The Center Conductor of the 7 mm Connector is supplied with 4 slots. If you require 6 slots, Part Number changes to: **8801 - KM96 - 02**

Although our catalog incorporates a very comprehensive range of products, due to our program of continuous development, there is no way that it will contain every product we manufacture. Please consult the factory for the product you require.

Dimensions shown are Inches over Millimeters or vice versa. Standard units have stainless finish (last 2 digits of the P/N are -02). Interfaces are per DIN 47 223, DIN 47 226, IEC 169-4, IEC 169-7, IEC 169-8, IEC 457-2, IEC 60169-5, IEEE 287, MIL-PRF-39012, MIL DTL-24044, MIL DTL-3643,MIL-STD-348B, where applicable

Spectrum Elektrotechnik GmbH
Germany
www.spectrum-et.com
sales@spectrum-et.com
Phone: +49 / 89 / 35 48 04 0
Fax: +49 / 89 / 35 48 04 90

Part - No.	8001-9092-02
Connectors	7mm to 3.5 mm-f
Frequency	DC - 18.0 GHz
VSWR max.	1.03 + 0.003 x f(GHz)

The Center Conductor of the 7 mm Connector is supplied with 4 slots. If you require 6 slots, Part Number changes to: **8001 - 9296 - 02**

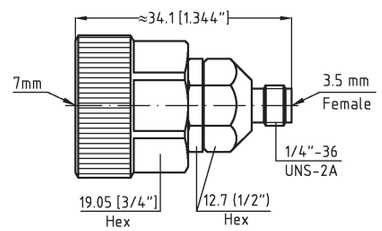

Part - No.	8001-9296-02
Connectors	7mm to 3.5 mm-f
Frequency	DC - 18.0 GHz
VSWR max.	1.03 + 0.003 x f(GHz)

The 7mm connector uses a 6-slotted contact

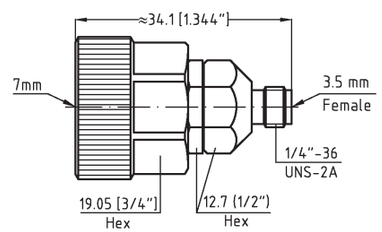

Part - No.	8002-9092-02
Connectors	7mm to 3.5 mm-f
Frequency	DC - 18.0 GHz
VSWR max.	1.03 + 0.003 x f(GHz)

The Center Conductor of the 7 mm Connector is supplied with 4 slots. If you require 6 slots, Part Number changes to: **8002 - 9296 - 02**

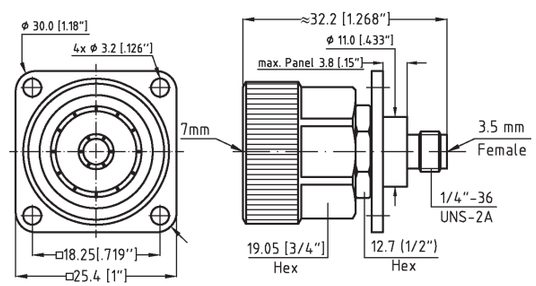

Part - No.	8002-9296-02
Connectors	7mm to 3.5 mm-f
Frequency	DC - 18.0 GHz
VSWR max.	1.03 + 0.003 x f(GHz)

The 7mm connector uses a 6-slotted contact

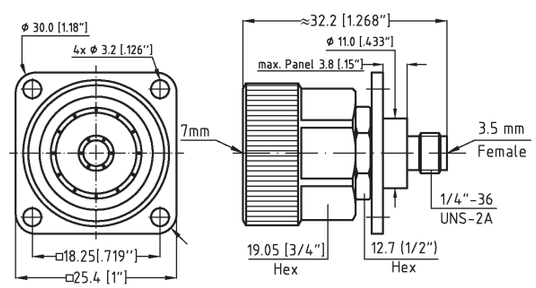

Dimensions shown are Inches over Millimeters or vice versa. Standard units have stainless finish (last 2 digits of the P/N are -02). Interfaces are per DIN 47 223, DIN 47 226, IEC 169-4, IEC 169-7, IEC 169-8, IEC 457-2, IEC 60169-5, IEEE 287, MIL-PRF-39012, MIL DTL-24044, MIL DTL-3643,MIL-STD-348B, where applicable

Spectrum Elektrotechnik GmbH
Germany
www.spectrum-et.com
sales@spectrum-et.com
Phone: +49 / 89 / 35 48 04 0
Fax: +49 / 89 / 35 48 04 90

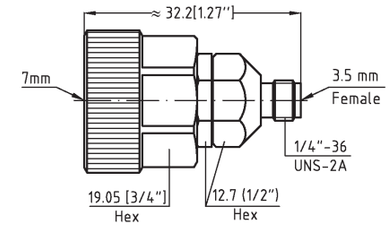

Part - No.	8003-9092-02
Connectors	7mm to 3.5 mm-f
Frequency	DC - 18.0 GHz
VSWR max.	1.03 + 0.003 x f(GHz)

The Center Conductor of the 7 mm Connector is supplied with 4 slots. If you require 6 slots, Part Number changes to: **8003 - 9296 - 02**

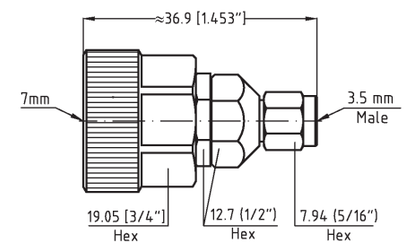

Part - No.	8001-9091-02
Connectors	7mm to 3.5 mm-male
Frequency	DC - 18.0 GHz
VSWR max.	1.03 + 0.003 x f(GHz)

The Center Conductor of the 7 mm Connector is supplied with 4 slots. If you require 6 slots, Part Number changes to: **8001 - 9196 - 02**

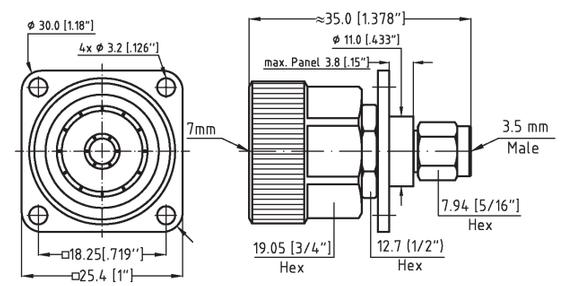

Part - No.	8002-9091-02
Connectors	7mm to 3.5 mm-male
Frequency	DC - 18.0 GHz
VSWR max.	1.03 + 0.003 x f(GHz)

The Center Conductor of the 7 mm Connector is supplied with 4 slots. If you require 6 slots, Part Number changes to: **8002 - 9196 - 02**

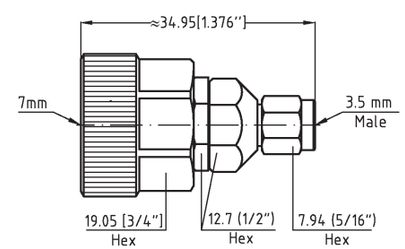

Part - No.	8003-9091-02
Connectors	7mm to 3.5 mm-male
Frequency	DC - 18.0 GHz
VSWR max.	1.03 + 0.003 x f(GHz)

The Center Conductor of the 7 mm Connector is supplied with 4 slots. If you require 6 slots, Part Number changes to: **8003 - 9196 - 02**

Dimensions shown are Inches over Millimeters or vice versa. Standard units have stainless finish (last 2 digits of the P/N are -02). Interfaces are per DIN 47 223, DIN 47 226, IEC 169-4, IEC 169-7, IEC 169-8, IEC 457-2, IEC 60169-5, IEEE 287, MIL-PRF-39012, MIL DTL-24044, MIL DTL-3643,MIL-STD-348B, where applicable

Spectrum Elektrotechnik GmbH
Germany
www.spectrum-et.com
sales@spectrum-et.com
Phone: +49 / 89 / 35 48 04 0
Fax: +49 / 89 / 35 48 04 90

Part - No.	8001-8990-02
Connectors	7 mm to C-female
Frequency	DC - 10.0 GHz
VSWR max.	1.06 + 0.004 x f(GHz)

The Center Conductor of the 7 mm Connector is supplied with 4 slots. If you require 6 slots, Part Number changes to: **8001 - 8996 - 02**

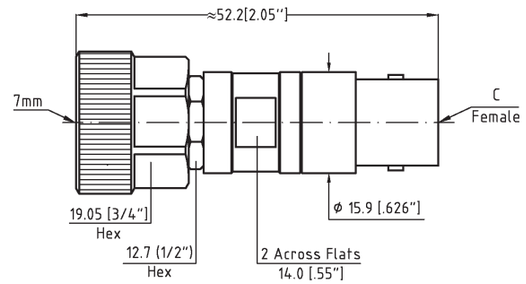

Part - No.	8001-8996-02
Connectors	7 mm to C-female
Frequency	DC - 10.0 GHz
VSWR max.	1.06 + 0.004 x f(GHz)

The 7mm connector uses a 6-slotted contact

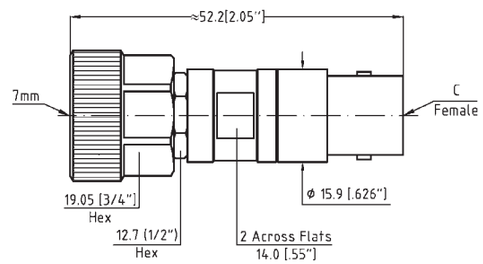

Part - No.	8001-8890-02
Connectors	7 mm to C-male
Frequency	DC - 10.0 GHz
VSWR max.	1.06 + 0.004 x f(GHz)

The Center Conductor of the 7 mm Connector is supplied with 4 slots. If you require 6 slots, Part Number changes to: **8001 - 8896 - 02**

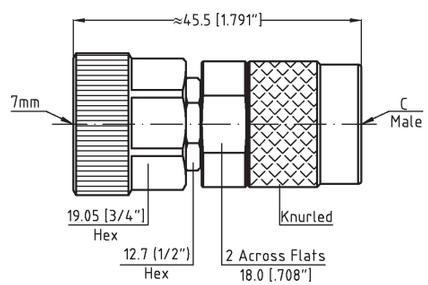

Part - No.	8001-8896-02
Connectors	7 mm to C-male
Frequency	DC - 10.0 GHz
VSWR max.	1.06 + 0.004 x f(GHz)

The 7mm connector uses a 6-slotted contact

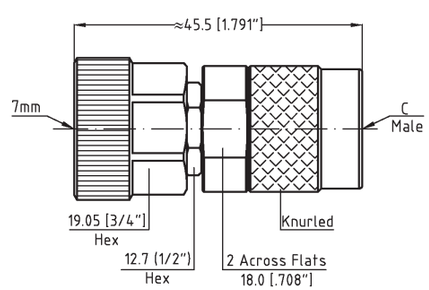

Dimensions shown are Inches over Millimeters or vice versa. Standard units have stainless finish (last 2 digits of the P/N are -02). Interfaces are per DIN 47 223, DIN 47 226, IEC 169-4, IEC 169-7, IEC 169-8, IEC 457-2, IEC 60169-5, IEEE 287, MIL-PRF-39012, MIL DTL-24044, MIL DTL-3643,MIL-STD-348B, where applicable

Spectrum Elektrotechnik GmbH
Germany
www.spectrum-et.com
sales@spectrum-et.com
Phone: +49 / 89 / 35 48 04 0
Fax: +49 / 89 / 35 48 04 90

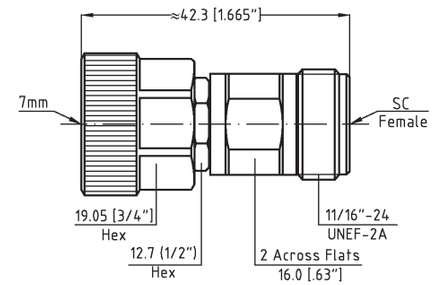

Part - No.	8001-7990-02
Connectors	7 mm to SC-female
Frequency	DC - 10.0 GHz
VSWR max.	1.06 + 0.004 x f(GHz)

The Center Conductor of the 7 mm Connector is supplied with 4 slots. If you require 6 slots, Part Number changes to: **8001 - 7996 - 02**

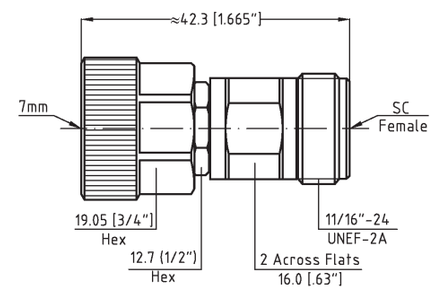

Part - No.	8001-7996-02
Connectors	7 mm to SC-female
Frequency	DC - 10.0 GHz
VSWR max.	1.06 + 0.004 x f(GHz)

The 7mm connector uses a 6-slotted contact

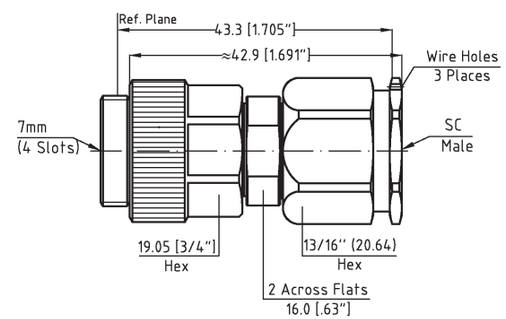

Part - No.	8001-8090-02
Connectors	7 mm to SC-male
Frequency	DC - 10.0 GHz
VSWR max.	1.06 + 0.004 x f(GHz)

The Center Conductor of the 7 mm Connector is supplied with 4 slots. If you require 6 slots, Part Number changes to: **8001 - 8096 - 02**

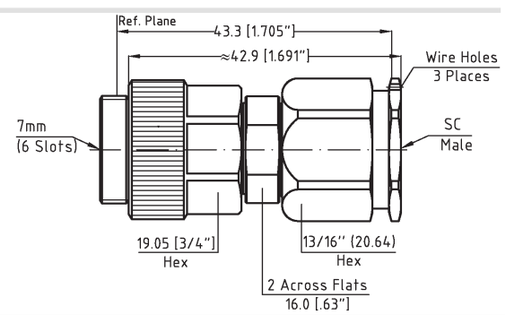

Part - No.	8001-8096-02
Connectors	7 mm to SC-male
Frequency	DC - 10.0 GHz
VSWR max.	1.06 + 0.004 x f(GHz)

The 7mm connector uses a 6-slotted contact

Dimensions shown are Inches over Millimeters or vice versa. Standard units have stainless finish (last 2 digits of the P/N are -02). Interfaces are per DIN 47 223, DIN 47 226, IEC 169-4, IEC 169-7, IEC 169-8, IEC 457-2, IEC 60169-5, IEEE 287, MIL-PRF-39012, MIL DTL-24044, MIL DTL-3643,MIL-STD-348B, where applicable

Spectrum Elektrotechnik GmbH
Germany
www.spectrum-et.com
sales@spectrum-et.com
Phone: +49 / 89 / 35 48 04 0
Fax: +49 / 89 / 35 48 04 90

Part - No.	8002-6190-02
Connectors	7 mm to N-female
Frequency	DC - 18.0 GHz
VSWR max.	1.03 + 0.003 x f(GHz)

The Center Conductor of the 7 mm Connector is supplied with 4 slots. If you require 6 slots, Part Number changes to: **8002 - 6196 - 02**

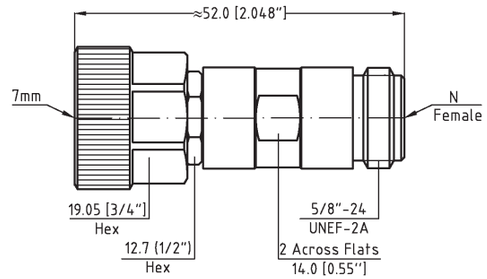

Part - No.	8002-5190-02
Connectors	7 mm to N-male
Frequency	DC - 18.0 GHz
VSWR max.	1.03 + 0.003 x f(GHz)

The Center Conductor of the 7 mm Connector is supplied with 4 slots. If you require 6 slots, Part Number changes to: **8002 - 5196 - 02**

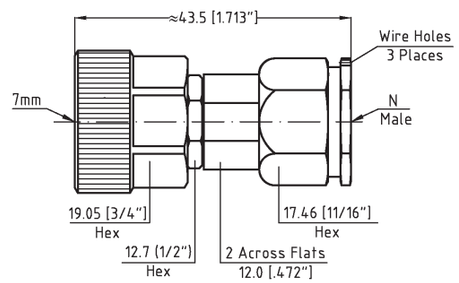

Dimensions shown are Inches over Millimeters or vice versa. Standard units have stainless finish (last 2 digits of the P/N are -02). Interfaces are per DIN 47 223, DIN 47 226, IEC 169-4, IEC 169-7, IEC 169-8, IEC 457-2, IEC 60169-5, IEEE 287, MIL-PRF-39012, MIL DTL-24044, MIL DTL-3643,MIL-STD-348B, where applicable

Adapters of equal electrical length 7mm to N

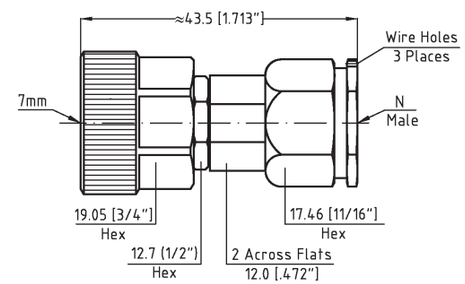

Part - No.	8802-5190-02
Connectors	7 mm to N-male
Frequency	DC - 18.0 GHz
VSWR max.	1.03 + 0.003 x f(GHz)

The Center Conductor of the 7 mm Connector is supplied with 4 slots. If you require 6 slots, Part Number changes to: **8802 - 5196 - 02**

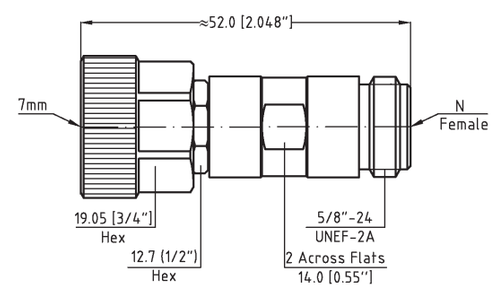

Part - No.	8802-6190-02
Connectors	7 mm to N-female
Frequency	DC - 18.0 GHz
VSWR max.	1.03 + 0.003 x f(GHz)

The Center Conductor of the 7 mm Connector is supplied with 4 slots. If you require 6 slots, Part Number changes to: **8802 - 6196 - 02**

You do not find the Adapter you need for an application? You need technical support? You need price and delivery information? Please contact your nearest Spectrum Representative, or please contact us direct.

Telephone: +49-89-3548-040 Facsimile: +49-89-3548-0490
e-mail: sales@spectrum-et.com www.spectrum-et.com

Dimensions shown are Inches over Millimeters or vice versa. Standard units have stainless finish (last 2 digits of the P/N are -02). Interfaces are per DIN 47 223, DIN 47 226, IEC 169-4, IEC 169-7, IEC 169-8, IEC 457-2, IEC 60169-5, IEEE 287, MIL-PRF-39012, MIL DTL-24044, MIL DTL-3643,MIL-STD-348B, where applicable

Part - No.	8001-2190-02
Connectors	7 mm to SMA-female
Frequency	DC - 18.0 GHz
VSWR max.	1.03 + 0.003 x f(GHz)

The Center Conductor of the 7 mm Connector is supplied with 4 slots. If you require 6 slots, Part Number changes to: **8001 - 2196 - 02**

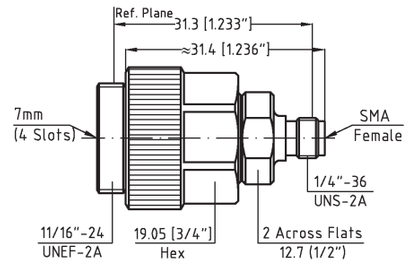

Part - No.	8U01-2190-02
Connectors	7 mm to SMA-female
Frequency	DC - 18.0 GHz
VSWR max.	1.03 + 0.003 x f(GHz)

Higher temperature applications

The Center Conductor of the 7 mm Connector is supplied with 4 slots. If you require 6 slots, Part Number changes to: **8U01 - 2196 - 02**

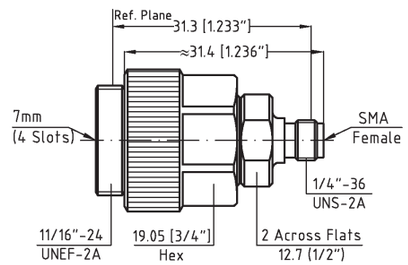

Part - No.	8002-2190-02
Connectors	7 mm to SMA-female
Frequency	DC - 15.0 GHz
VSWR max.	1.03 + 0.003 x f(GHz)

The Center Conductor of the 7 mm Connector is supplied with 4 slots. If you require 6 slots, Part Number changes to: **8002 - 2196 - 02**

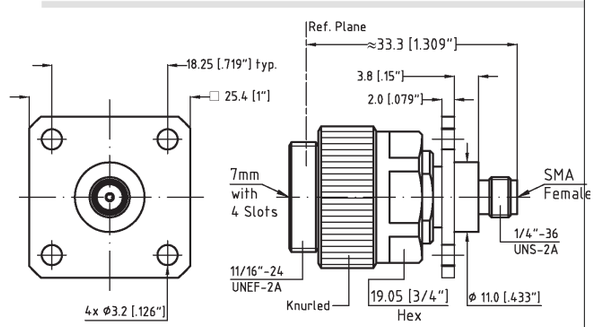

Part - No.	8001-1190-02
Connectors	7 mm to SMA-male
Frequency	DC - 15.0 GHz
VSWR max.	1.03 + 0.003 x f(GHz)

The Center Conductor of the 7 mm Connector is supplied with 4 slots. If you require 6 slots, Part Number changes to: **8001 - 1196 - 02**

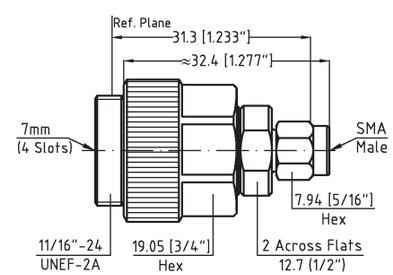

Dimensions shown are Inches over Millimeters or vice versa. Standard units have stainless finish (last 2 digits of the P/N are -02). Interfaces are per DIN 47 223, DIN 47 226, IEC 169-4, IEC 169-7, IEC 169-8, IEC 457-2, IEC 60169-5, IEEE 287, MIL-PRF-39012, MIL DTL-24044, MIL DTL-3643,MIL-STD-348B, where applicable

Spectrum Elektrotechnik GmbH
Germany
www.spectrum-et.com
sales@spectrum-et.com
Phone: +49 / 89 / 35 48 04 0
Fax: +49 / 89 / 35 48 04 90

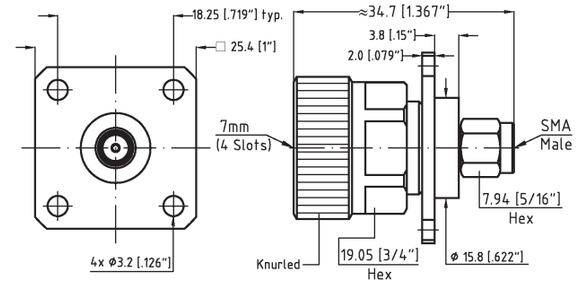

Part - No.	8002-1190-02
Connectors	7 mm to SMA-male
Frequency	DC - 18.0 GHz
VSWR max.	1.03 + 0.003 x f(GHz)

The Center Conductor of the 7 mm Connector is supplied with 4 slots. If you require 6 slots, Part Number changes to: **8002 - 1196 - 02**

Dimensions shown are Inches over Millimeters or vice versa. Standard units have stainless finish (last 2 digits of the P/N are -02). Interfaces are per DIN 47 223, DIN 47 226, IEC 169-4, IEC 169-7, IEC 169-8, IEC 457-2, IEC 60169-5, IEEE 287, MIL-PRF-39012, MIL DTL-24044, MIL DTL-3643,MIL-STD-348B, where applicable

Spectrum Elektrotechnik GmbH
Germany
www.spectrum-et.com
sales@spectrum-et.com
Phone: +49 / 89 / 35 48 04 0
Fax: +49 / 89 / 35 48 04 90

Part - No.	8002-4190-02
Connectors	7 mm to TNCA-fem.
Frequency	DC - 18.0 GHz
VSWR max.	1.03 + 0.003 x f(GHz)

The Center Conductor of the 7 mm Connector is supplied with 4 slots. If you require 6 slots, Part Number changes to: **8002 - 4196 - 02**

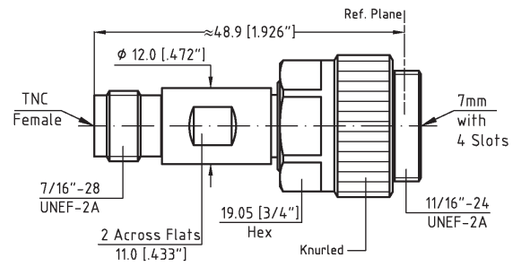

Part - No.	8U02-4190-02
Connectors	7 mm to TNCA-fem.
Frequency	DC - 18.0 GHz
VSWR max.	1.03 + 0.003 x f(GHz)

Higher Temperature Application

The Center Conductor of the 7 mm Connector is supplied with 4 slots. If you require 6 slots, Part Number changes to: **8U02 - 4196 - 02**

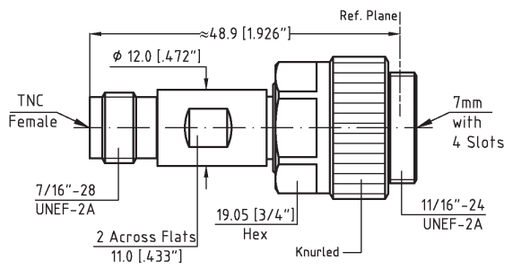

Part - No.	8002-3190-02
Connectors	7 mm to TNCA-male
Frequency	DC - 18.0 GHz
VSWR max.	1.03 + 0.003 x f(GHz)

The Center Conductor of the 7 mm Connector is supplied with 4 slots. If you require 6 slots, Part Number changes to: **8002 - 3196 - 02**

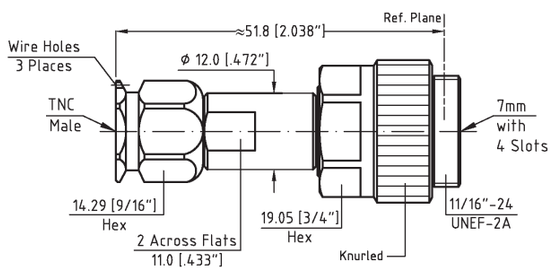

Part - No.	8U02-3190-02
Connectors	7 mm to TNCA-male
Frequency	DC - 18.0 GHz
VSWR max.	1.06 + 0.004 x f(GHz)

Higher Temperature Application

The Center Conductor of the 7 mm Connector is supplied with 4 slots. If you require 6 slots, Part Number changes to: **8U02 - 3196 - 02**

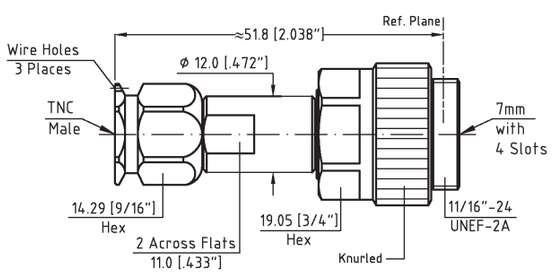

Dimensions shown are Inches over Millimeters or vice versa. Standard units have stainless finish (last 2 digits of the P/N are -02). Interfaces are per DIN 47 223, DIN 47 226, IEC 169-4, IEC 169-7, IEC 169-8, IEC 457-2, IEC 60169-5, IEEE 287, MIL-PRF-39012, MIL DTL-24044, MIL DTL-3643,MIL-STD-348B, where applicable

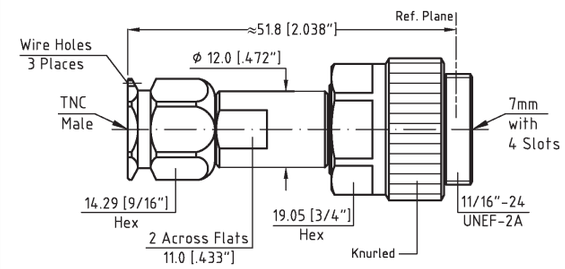

Part - No.	8003-3190-02
Connectors	7 mm to TNCA-male
Frequency	DC - 18.0 GHz
VSWR max.	1.03 + 0.003 x f(GHz)

The Center Conductor of the 7 mm Connector is supplied with 4 slots. If you require 6 slots, Part Number changes to: **8003 - 3196 - 02**

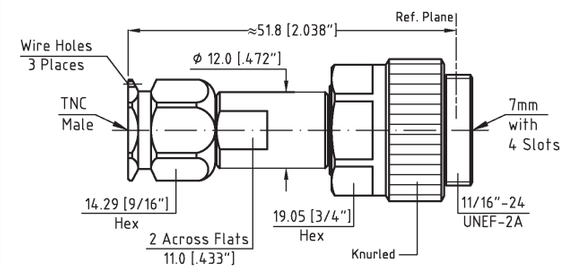

Part - No.	8U03-3190-02
Connectors	7 mm to TNCA-male
Frequency	DC - 18.0 GHz
VSWR max.	1.03 + 0.003 x f(GHz)

Higher Temperature Application

The Center Conductor of the 7 mm Connector is supplied with 4 slots. If you require 6 slots, Part Number changes to: **8U03 - 3196 - 02**

Dimensions shown are Inches over Millimeters or vice versa. Standard units have stainless finish (last 2 digits of the P/N are -02). Interfaces are per DIN 47 223, DIN 47 226, IEC 169-4, IEC 169-7, IEC 169-8, IEC 457-2, IEC 60169-5, IEEE 287, MIL-PRF-39012, MIL DTL-24044, MIL DTL-3643,MIL-STD-348B, where applicable

Adapters, Attenuators, Blind Mate Connectors, Cable Assemblies, Connectors, Delay Lines, Duplexers Equalizers, Fine Grain Equalizers, Gain Amplitude Equalizers, Line Stretchers, Machines, Phase Adjusters, Push - On Connectors & Adapters, Quick Connections, Terminations (Coax-), Tools, Waveguide to Coax - Adapters & Transmissions, and.....

Coaxial Delay Lines
Semi Rigid and flexible
and temp. controlled
and.....

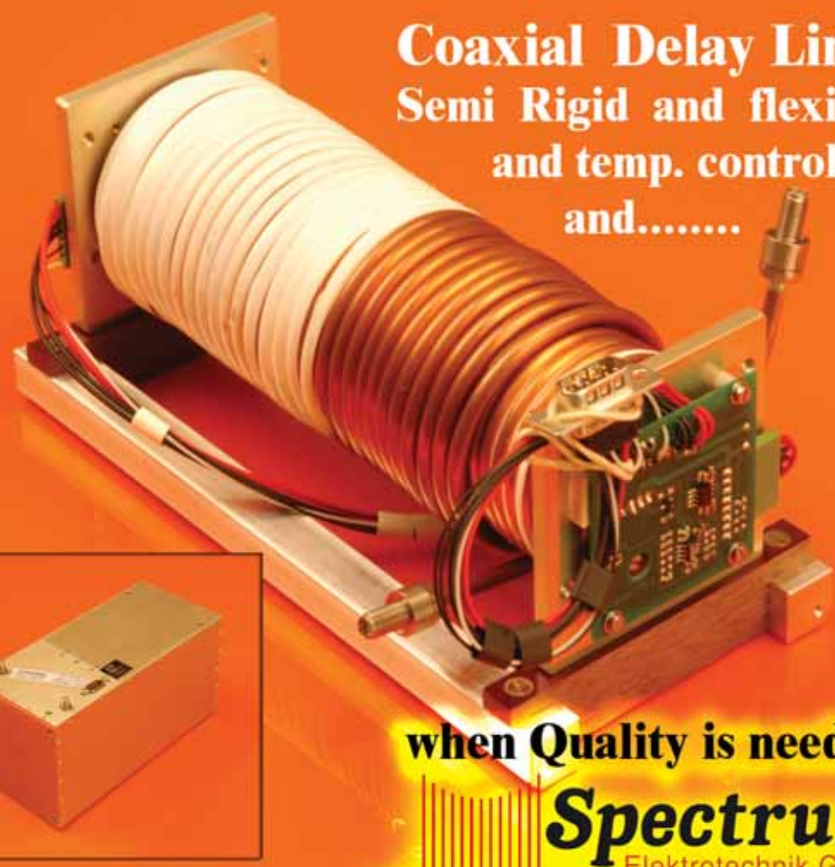

when Quality is needed
Spectrum
Elektrotechnik GmbH

80905 Munich, Germany
P.O. Box 450533
Telephone: +49-89-3548-040
Facsimile: +49-89-3548-0490
WWW.SPECTRUM-ET.COM
Email: sales@spectrum-et.com
Verzögerungsl-RE3

In-Series and Between-Series Adapters 7/16

If your choice of 7/16 mm Adapter is not shown in this section, please refer to the Table below to determine other possible locations. Should you not find your adapter listed in any section, please consult the factory or your Spectrum Elektrotechnik Area Representative.

7/16	Section	Page
7/16 Overview & Specifications	F	1
7/16 mm In-Series		4
Between Series 7/16 to N		5
Between Series 7/16 to 7/16 Push- & Slide-On	DD	8
Between Series 7/16 to SBX	L	4
Between Series 7/16 to SBY	M	4

Although our catalog incorporates a very comprehensive range of products, due to our program of continuous development, there is no way that it will contain every product we manufacture. Please consult the factory for the product you require.
To improve our Standard Products we reserve the right to make changes. Specifications are therefore subject to change without notice.

Dimensions shown are Inches over Millimeters or vice versa. Standard units have stainless finish (last 2 digits of the P/N are -02). Interfaces are per DIN 47 223, DIN 47 226, IEC 169-4, IEC 169-7, IEC 169-8, IEC 457-2, IEC 60169-5, IEEE 287, MIL-PRF-39012, MIL DTL-24044, MIL DTL-3643,MIL-STD-348B, where applicable

The specifications below are general specifications for all 7/16 connectors. Specific Data for VSWR, Insertion Loss, R.F. leakage, etc., are available from the factory upon request. Specifications in the following table are recommended for any procurement documents or drawings. In the event of any conflict between these specifications and General Specifications IEC 169-4 (DIN 47223), these specifications shall govern. These specifications are subject to change according to the latest revision.

REQUIREMENT	GENERAL SPECIFICATIONS
Standard Materials	STEEL corrosion resistant 1.4305 per DIN EN 10088; ASTM-A582 (303), or 1.4404 (316L) respectively. ALUMINUM AlMg4.5Mn per DIN EN 1706, AlMgSi0.5 per DIN EN 1706, AlMgSi1 per DIN EN 1706 (6061-T6 per QQ-A-225/8). BRASS CuZn39Pb3 per DIN 17660 (QQ-B-626 (ASTM-B124), half hard). COPPER BERYLLIUM 33-25 CuBe2PbH per DIN17666(DIN CEN/TS;DIN SPEC 9700)(QQ-C530). TFE Fluorocarbon per DIN 52900 (ASTM-D-1710) SILICONE RUBBER per DIN ISO 3601)(A-A-59588,Class IIB) Gr. 50 - 75. BORIUM NITRITE Dielectric for high power applications per in-house specification
Finish for COPPER BERYLLIUM	Center Contacts shall be gold plated to a minimum thickness of .00005-inch in accordance with ASTM-B-488, Type III, Code C, Class 1.25
STAINLESS STEEL	shall be passivated per ASTM-A967
ALUMINUM	Conductive Parts shall have an iridited finish per MIL-DTL-5541 Other parts, such as Coupling Nuts and Back-Bodies shall be anodized per MIL-A-8625.
BRASS	.00003 inch (0.8 µm) min. gold plating per MIL-DTL-45204, or nickel plating per QQ-N-290, as specified.
VARIOUS	Imoloy .0001 inch (2.5 µm) min. plating, consisting of 55% Copper / 20% Zinc / 25% Tin (on special request).
Design	The design shall be such that the outline dimensions in this catalog are met. In addition, the assembled connector shall meet the interface dimensions.
ELECTRICAL	
Frequency Range	DC - 7.5 GHz min.
Insulation Resistance	The insulation resistance shall not be less than 1.000 megohms.(10 gigaohms, IEC-169-4)
Voltage Standing Wave Ratio (VSWR)	1.06 + .005 * f (GHz)
Contact Resistance	The center contact resistance drop shall not exceed 0,8 milliohms and the outer contact resistance drop shall not exceed 1.5 milliohms.
Dielectric Withstanding Voltage	
RF High Potential	The magnitude of the test voltage shall be 3.000 volts rms at sea level.
Withstanding Voltage	The RF high potential withstanding voltage is 4,000 volts rms at 5 MHz. Leakage is not applicable.
RF Leakage	RF Leakage is not applicable
Insertion Loss	(.05 SQT(f(GHz))) dB
MECHANICAL	
Connector Durability	The connector is to be tested and its mating connector shall be subjected to 500 insertion min. Withdrawal cycles / minute are not applicable. The connector shall show no evidence of mechanical failure and the connector shall meet the mating characteristic requirements.
Cable Retention Force	56,2 pounds (250 N) min.
Coupling Nut Retention Force	Not applicable for Female connectors. For male connectors, the axial force is 22.5 lbs (100 N) max.. The torque is 221 inch-pounds (25 Nm) max.
Force to Engage and Disengage	The Force to Engage and Disengage is not applicable.
Longitudinal Force max.	Longitudinal force is not applicable.
Mating Characteristics	See interface dimensions shown on next page. Applicable to Females only: oversize pin .2008 inch (5.10 mm) max. dia. pin; .177 inch (4.50 mm) deep; insertion force max. with min. dia. pin is not applicable; withdrawal force 2.16 oz (.6 N) min. with .1953 inch (4.96 mm) max. dia. pin.(?)
Recommended Mating Torque	Recommended Mating Torque is not applicable.
ENVIRONMENTAL	
Corrosion (Salt Spray)	Specification MIL-STD-202, Method 101, Test Condition B. The salt solution shall be 5%.
Vibration	Specification MIL-STD-202, Method 204, Test Condition B.
Shock	Specification MIL-STD-202, Method 213, Test Condition I.
Thermal Shock	Specification MIL-STD-202, Method 107, Test Condition B, except high temperature shall be + 200°C.
Moisture Resistance	Specification MIL-STD-202, Method 106. Step 7b (vibration) shall be omitted. Insulation resistance shall be 200 megohms min. within 5 minutes of removal from humidity.
Corona Level	The connector shall not exhibit breakdown (corona) when the applied voltage is 2800 volts rms and the altitude is 0 feet.

Dimensions shown are Inches over Millimeters or vice versa. Standard units have stainless finish (last 2 digits of the P/N are -02). Interfaces are per DIN 47 223, DIN 47 226, IEC 169-4, IEC 169-7, IEC 169-8, IEC 457-2, IEC 60169-5, IEEE 287, MIL-PRF-39012, MIL DTL-24044, MIL DTL-3643,MIL-STD-348B, where applicable

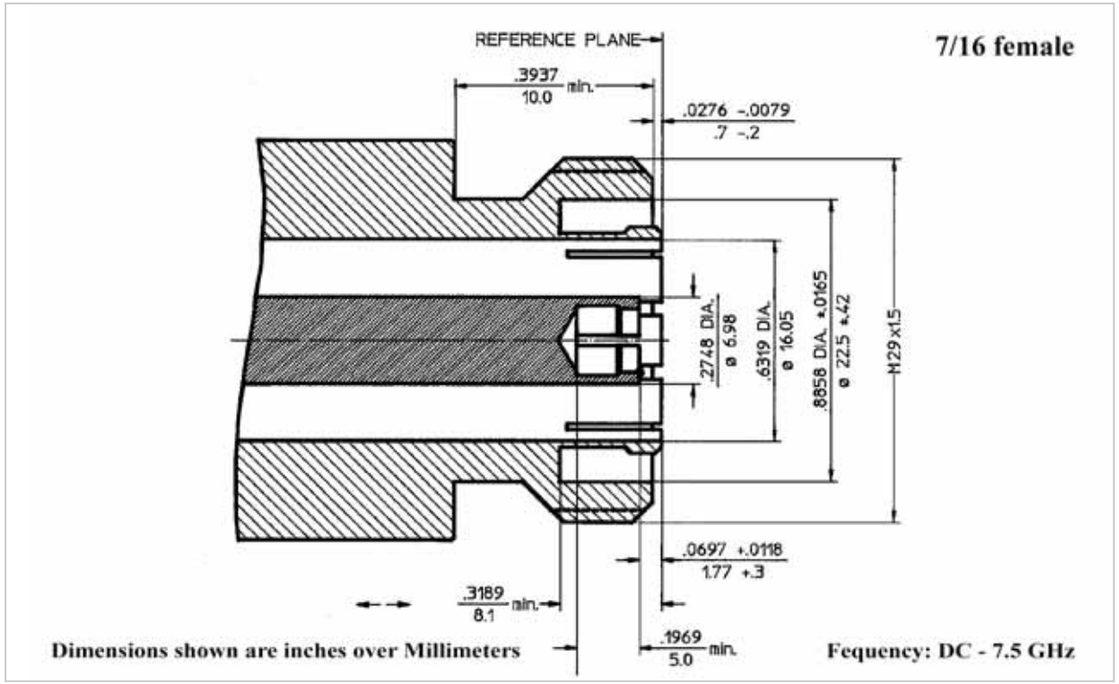

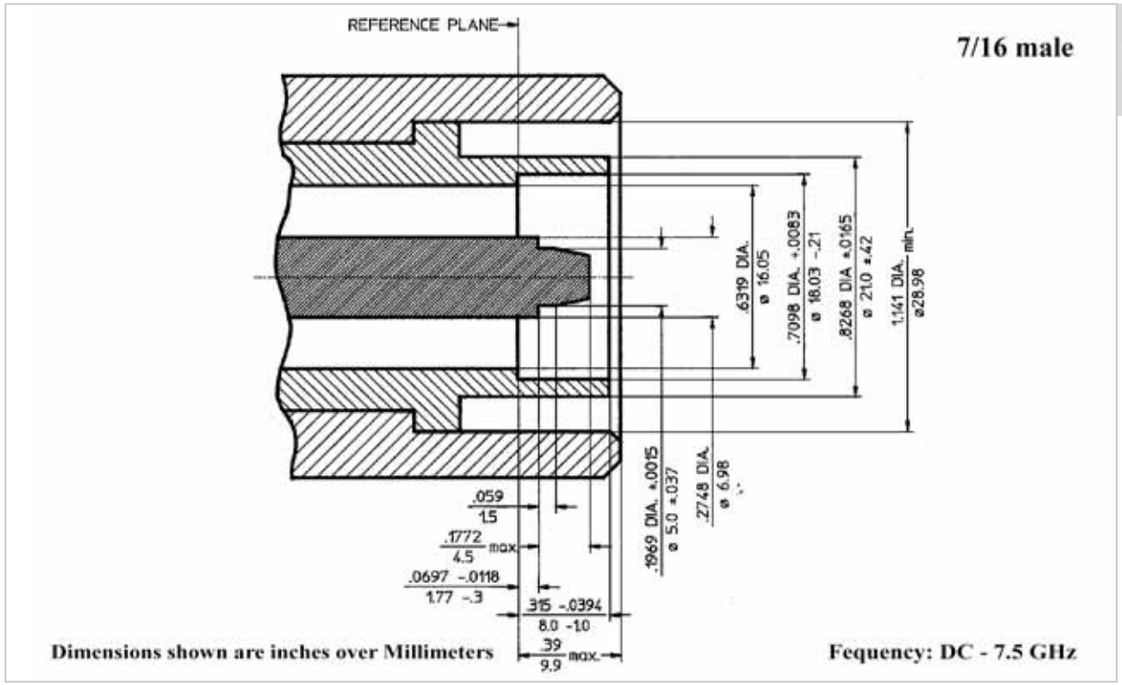

Dimensions shown are Inches over Millimeters or vice versa. Standard units have stainless finish (last 2 digits of the P/N are -02). Interfaces are per DIN 47 223, DIN 47 226, IEC 169-4, IEC 169-7, IEC 169-8, IEC 457-2, IEC 60169-5, IEEE 287, MIL-PRF-39012, MIL DTL-24044, MIL DTL-3643,MIL-STD-348B, where applicable

Part - No.	8001-7676-02
Connectors	7/16-fem to 7/16-fem
Frequency	DC - 7.5 GHz
VSWR max.	1.06 + 0.005 x f(GHz)

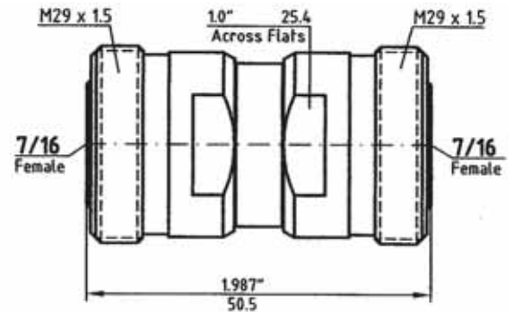

Part - No.	8002-7676-02
Connectors	7/16-fem to 7/16-fem
Frequency	DC - 7.5 GHz
VSWR max.	1.06 + 0.005 x f(GHz)

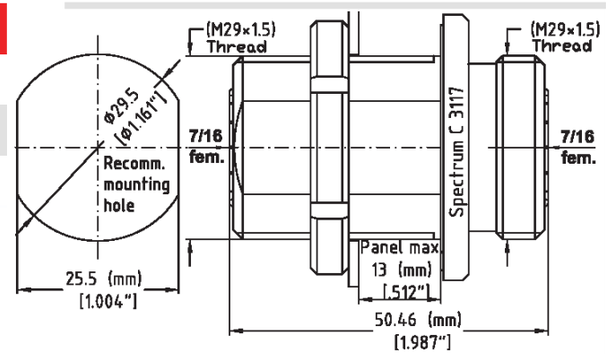

Part - No.	8001-7576-02
Connectors	7/16-fem to 7/16-male
Frequency	DC - 7.5 GHz
VSWR max.	1.06 + 0.005 x f(GHz)

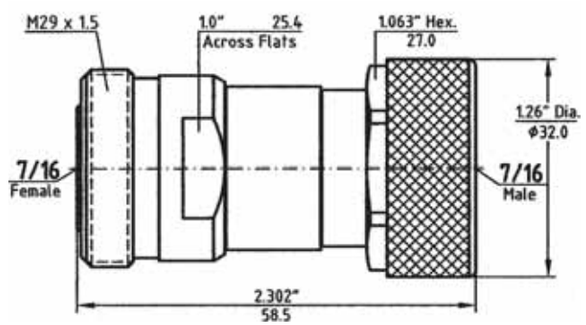

Part - No.	8001-7575-02
Connectors	7/16-male to 7/16-male
Frequency	DC - 7.5 GHz
VSWR max.	1.06 + 0.005 x f(GHz)

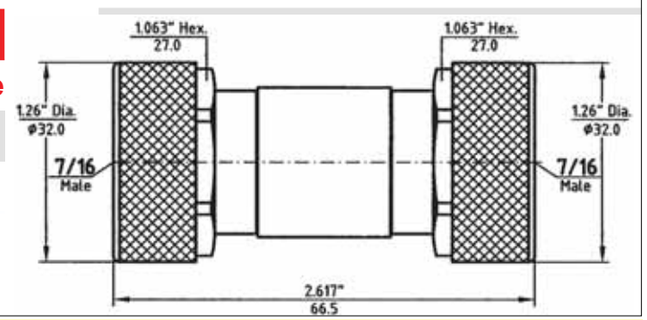

Dimensions shown are Inches over Millimeters or vice versa. Standard units have stainless finish (last 2 digits of the P/N are -02). Interfaces are per DIN 47 223, DIN 47 226, IEC 169-4, IEC 169-7, IEC 169-8, IEC 457-2, IEC 60169-5, IEEE 287, MIL-PRF-39012, MIL DTL-24044, MIL DTL-3643,MIL-STD-348B, where applicable

Spectrum Elektrotechnik GmbH
Germany
www.spectrum-et.com
sales@spectrum-et.com
Phone: +49 / 89 / 35 48 04 0
Fax: +49 / 89 / 35 48 04 90

Part - No.	8001-6176-02
Connectors	7/16-fem to N-fem
Frequency	DC - 7.5 GHz
VSWR max.	1.06 + 0.005 x f(GHz)

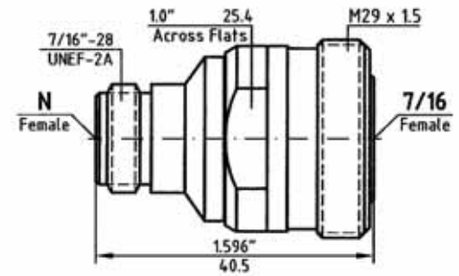

Part - No.	8001-5176-02
Connectors	7/16-fem to N-male
Frequency	DC - 10.0 GHz
VSWR max.	1.06 + 0.005 x f(GHz)

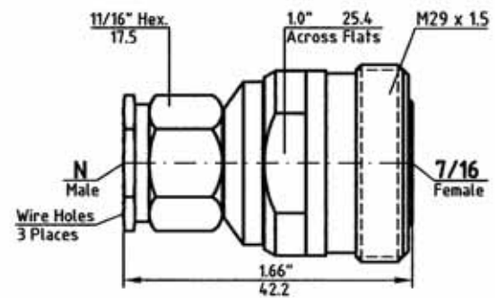

Part - No.	8001-6175-02
Connectors	7/16-male to N-fem
Frequency	DC - 7.5 GHz
VSWR max.	1.06 + 0.005 x f(GHz)

P/N 800V-6175-02 has same dimensions, but venting holes

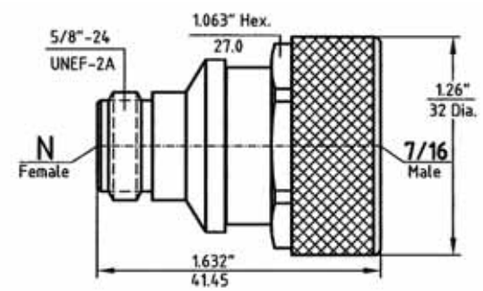

Part - No.	8001-5175-02
Connectors	7/16-male to N-male
Frequency	DC - 10.0 GHz
VSWR max.	1.06 + 0.005 x f(GHz)

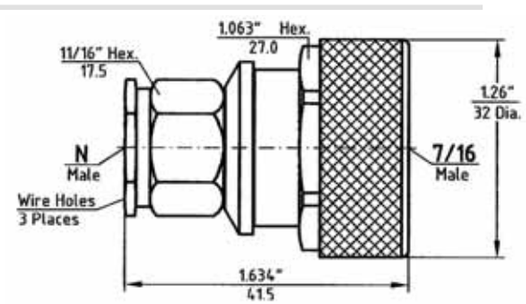

Dimensions shown are Inches over Millimeters or vice versa. Standard units have stainless finish (last 2 digits of the P/N are -02). Interfaces are per DIN 47 223, DIN 47 226, IEC 169-4, IEC 169-7, IEC 169-8, IEC 457-2, IEC 60169-5, IEEE 287, MIL-PRF-39012, MIL DTL-24044, MIL DTL-3643,MIL-STD-348B, where applicable

Spectrum Elektrotechnik GmbH
Germany
www.spectrum-et.com
sales@spectrum-et.com
Phone: +49 / 89 / 35 48 04 0
Fax: +49 / 89 / 35 48 04 90

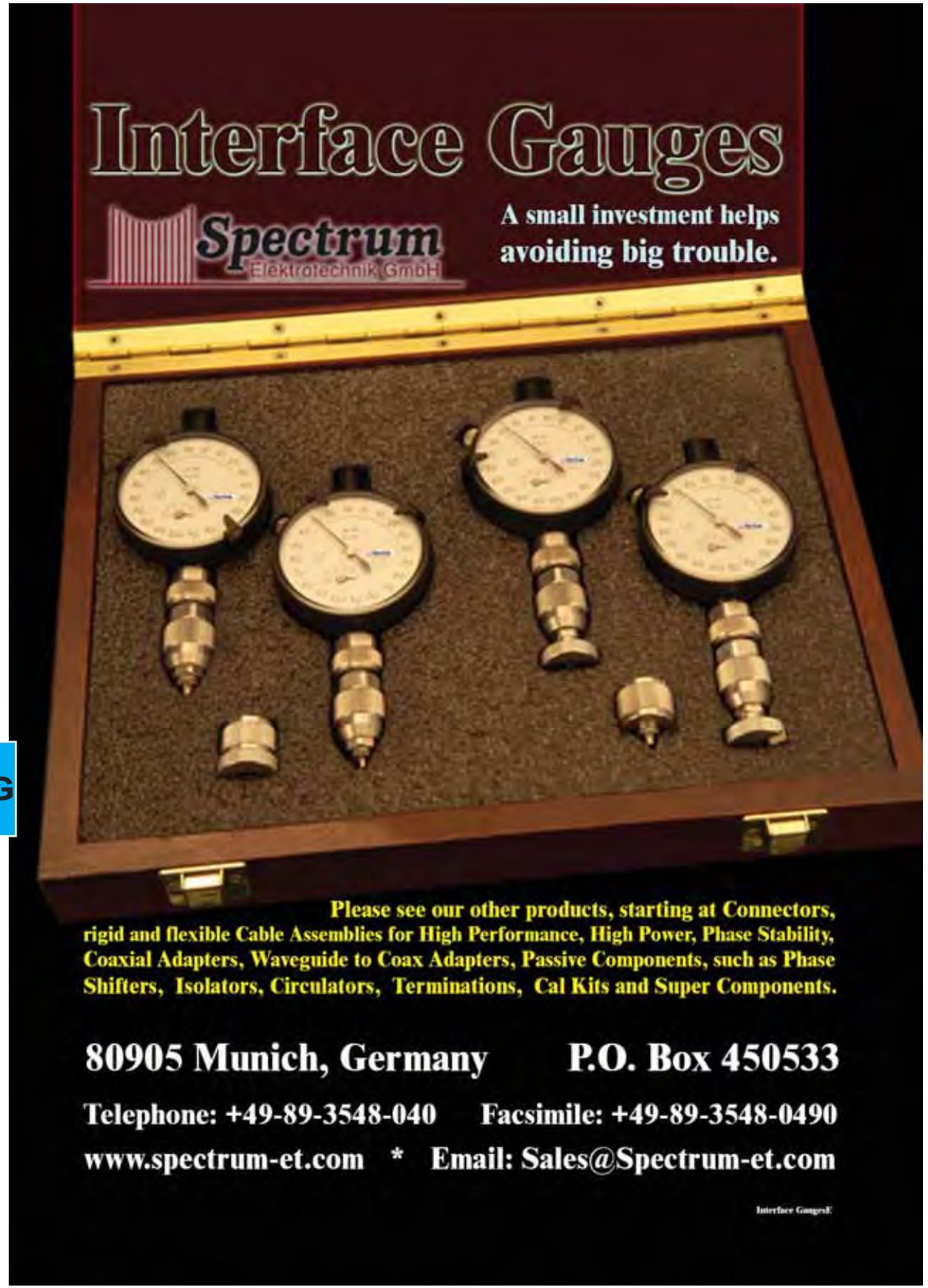

In-Series and Between-Series Adapters BMA

If your choice of BMA Adapter is not shown in this section, please refer to the Table below to determine other possible locations. Should you not find your adapter listed in any section, please consult the factory or your Spectrum Elektrotechnik Area Representative.

BMA	Section	Page
BMA Overview & Specifications	G	2
Between Series BMA to N		5
Between Series BMA to SMA		7

Although our catalog incorporates a very comprehensive range of products, due to our program of continuous development, there is no way that it will contain every product we manufacture. Please consult the factory for the product you require.
To improve our Standard Products we reserve the right to make changes. Specifications are therefore subject to change without notice.

Dimensions shown are Inches over Millimeters or vice versa. Standard units have stainless finish (last 2 digits of the P/N are -02). Interfaces are per DIN 47 223, DIN 47 226, IEC 169-4, IEC 169-7, IEC 169-8, IEC 457-2, IEC 60169-5, IEEE 287, MIL-PRF-39012, MIL DTL-24044, MIL DTL-3643,MIL-STD-348B, where applicable

The specifications below are general specifications for all BMA connectors. Specific Data for VSWR, Insertion Loss, R.F. leakage, etc., are available from the factory upon request. Specifications in the following table are recommended for any procurement documents or drawings. In the event of any conflict between these specifications and General Specifications MIL-PRF-31031, these specifications shall govern. These specifications are subject to change according to the latest revision.

REQUIREMENT	GENERAL SPECIFICATIONS
Standard Materials	STEEL corrosion resistant 1.4305 per DIN EN 10088; ASTM-A582 (303), or 1.4404 (316L) respectively. ALUMINUM AlMg4.5Mn per DIN EN 1706, AlMgSi0.5 per DIN EN 1706, AlMgSi1 per DIN EN 1706 (6061-T6 per QQ-A-225/8). BRASS CuZn39Pb3 per DIN 17660 (QQ-B-626 (ASTM-B124), half hard). COPPER BERYLLIUM 33-25 CuBe2PbH per DIN17666(DIN CEN/TS;DIN SPEC 9700)(QQ-C530). TFE Fluorocarbon per DIN 52900 (ASTM-D-1710), or Thermoplast per DIN EN ISO 10350, or PEI per in-house specification respectively for higher temperature applications. SILICONE RUBBER per DIN ISO 3601)(A-A-59588,Class IIB) Gr. 50 - 75. BORIUM NITRITE Dielectric for high power applications per in-house specification
Finish for COPPER BERYLLIUM STAINLESS STEEL ALUMINUM BRASS VARIOUS	Center Contacts shall be gold plated to a minimum thickness of .00005-inch in accordance with ASTM-B-488, Type III, Code C, Class 1.25 shall be passivated per ASTM-A967 Conductive Parts shall have an iridited finish per MIL-DTL-5541 Other parts, such as Coupling Nuts and Back-Bodies shall be anodized per MIL-A-8625. .00003 inch (0.8 µm) min. gold plating per MIL-DTL-45204, or nickel plating per QQ-N-290, as specified. Imoloy .0001 inch (2.5 µm) min. plating, consisting of 55% Copper / 20% Zinc / 25% Tin (on special request).
Design	The design shall be such that the outline dimensions in this catalog are met. In addition, the assembled connector shall meet the interface dimensions.
ELECTRICAL	
Frequency Range Insulation Resistance Voltage Standing Wave Ratio (VSWR) Contact Resistance Dielectric Withstanding Voltage RF High Potential Withstanding Voltage RF Leakage Insertion Loss	DC - 22.0 GHz min. The insulation resistance shall not be less than 5.000 megohms. 1.06 + 0.005 * f (GHz) (MIL-PRF-31031: 1.15 + 0.02 * f (GHz)) The center contact resistance drop shall not exceed 3.0 milliohms and the outer contact resistance drop shall not exceed 2.0 milliohms. The magnitude of the test voltage shall be 1.000 volts rms at sea level. The RF high potential withstanding voltage is 670 volts rms min.. Leakage is not applicable. RF Leakage is not applicable (.05 SQT(f(GHz))) dB (.03SQT(f(GHz)) dB; MIL-PRF-31031)
MECHANICAL	
Connector Durability Cable Retention Force Coupling Nut Retention Force Force to Engage and Disengage Longitudinal Force max. Mating Characteristics Recommended Mating Torque	The connector is to be tested and its mating connector shall be subjected to 500 insertion min. Withdrawal cycles / minute are not applicable. The connector shall show no evidence of mechanical failure and the connector shall meet the mating characteristic requirements. 6 pounds (26.7 N) min. Not applicable for Female connectors. For male connectors, the axial force is 6 lbs (26,7 N) max. The torque required to engage shall not exceed 3 lbs. (13.4 N). The disengage force shall not exceed 3 lbs. (13.4 N) max. See interface dimensions shown on next page. Applicable to Females only: oversize pin .0373 inch (0.09 mm) max. dia. pin; .045inch (1.15 mm) deep; insertion force max. with min. dia. pin is not applicable; withdrawal force 1.0 oz (2.8 N) min. with .0355 inch (0.9 mm) max. dia.pin. Recommended Mating Torque is not applicable.
ENVIRONMENTAL	
Corrosion (Salt Spray) Vibration Shock Thermal Shock Moisture Resistance Corona Level	Specification MIL-STD-202, Method 101, Test Condition B. The salt solution shall be 5%. Specification MIL-STD-202, Method 204, Test Condition D. Specification MIL-STD-202, Method 213, Test Condition I. Specification MIL-STD-202, Method 107, Test Condition B, except high temperature shall be + 200°C. Specification MIL-STD-202, Method 106. Step 7b (vibration) shall be omitted. Insulation resistance shall be 200 megohms min. within 5 minutes of removal from humidity. The connector shall not exhibit breakdown (corona) when the applied voltage is 335 volts rms and the altitude is 70.000 feet.

Dimensions shown are Inches over Millimeters or vice versa. Standard units have stainless finish (last 2 digits of the P/N are -02). Interfaces are per DIN 47 223, DIN 47 226, IEC 169-4, IEC 169-7, IEC 169-8, IEC 457-2, IEC 60169-5, IEEE 287, MIL-PRF-39012, MIL DTL-24044, MIL DTL-3643,MIL-STD-348B, where applicable

Spectrum Elektrotechnik GmbH
Germany
www.spectrum-et.com
sales@spectrum-et.com
Phone: +49 / 89 / 35 48 04 0
Fax: +49 / 89 / 35 48 04 90

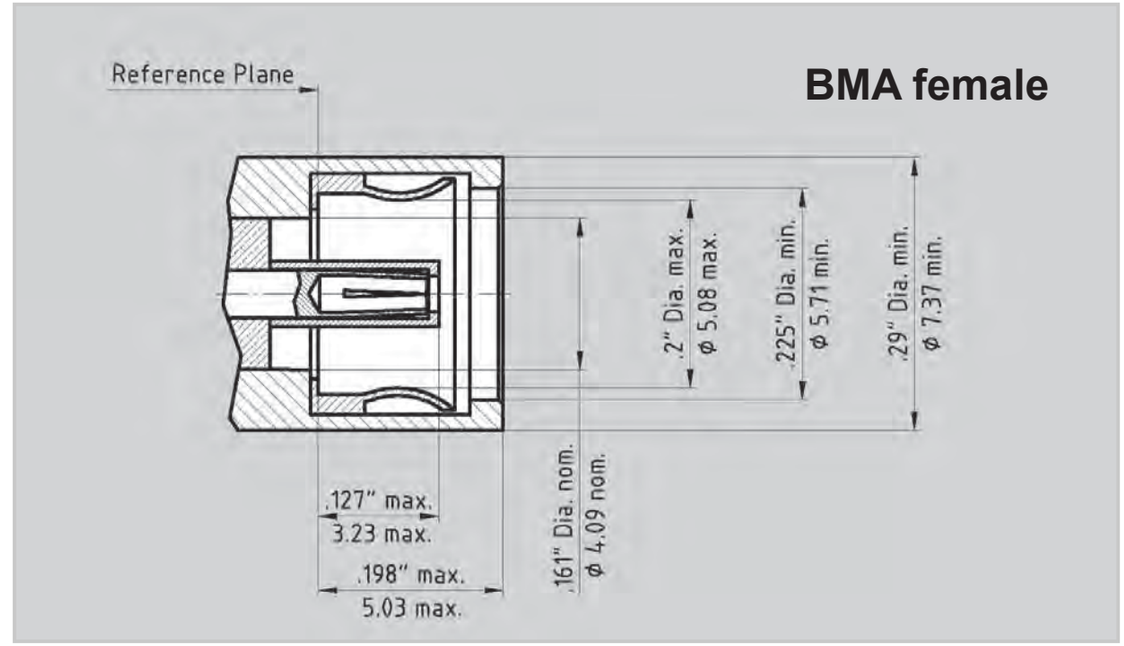

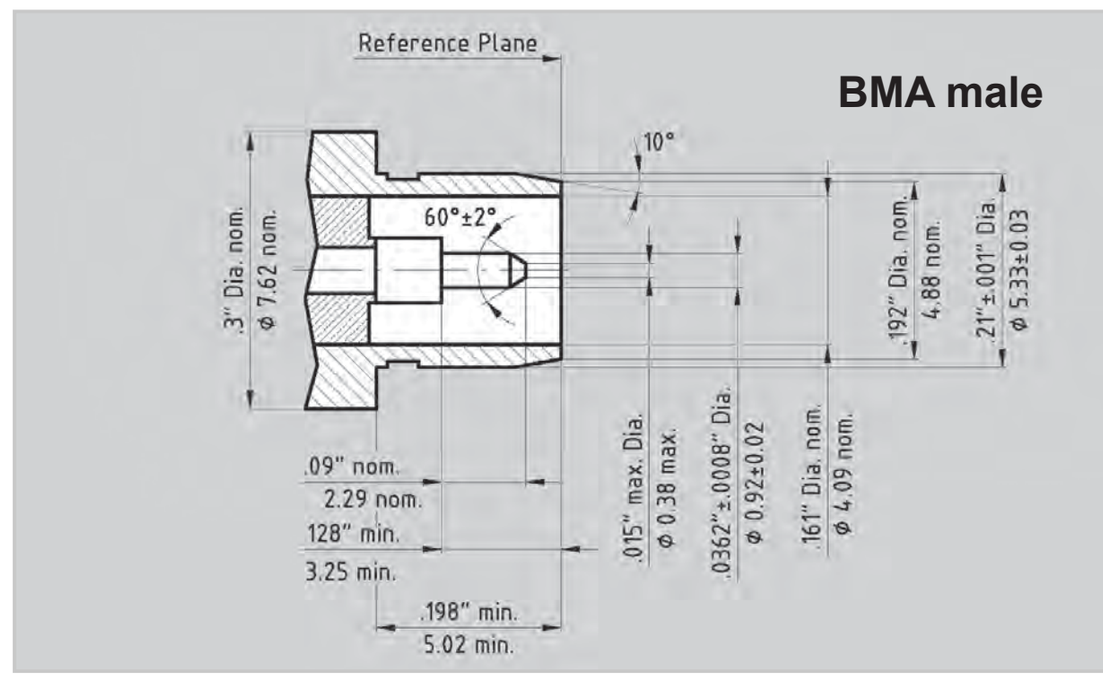

Dimensions shown are Inches over Millimeters or vice versa. Standard units have stainless finish (last 2 digits of the P/N are -02). Interfaces are per DIN 47 223, DIN 47 226, IEC 169-4, IEC 169-7, IEC 169-8, IEC 457-2, IEC 60169-5, IEEE 287, MIL-PRF-39012, MIL DTL-24044, MIL DTL-3643,MIL-STD-348B, where applicable

Spectrum Elektrotechnik GmbH
Germany
www.spectrum-et.com
sales@spectrum-et.com
Phone: +49 / 89 / 35 48 04 0
Fax: +49 / 89 / 35 48 04 90

Part - No.	8001-BW61-02
Connectors	BMA-fem. to N-fem.
Frequency	DC - 18.0 GHz
VSWR max.	1.06 + 0.005 x f(GHz)

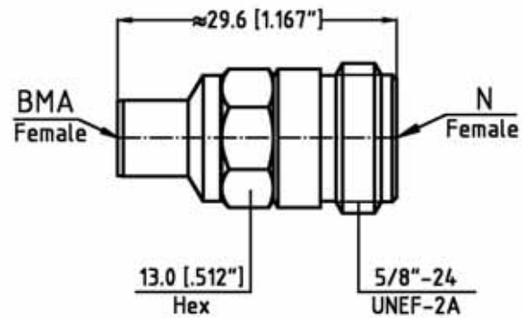

Part - No.	8U01-BW61-02
Connectors	BMA-fem. to N-fem.
Frequency	DC - 18.0 GHz
VSWR max.	1.06 + 0.005 x f(GHz)

Higher Temperature Application

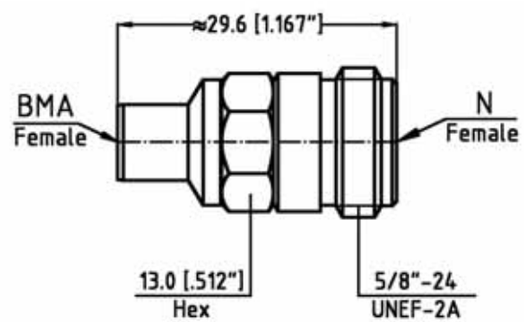

Part - No.	8001-BW51-02
Connectors	BMA-fem. to N-male
Frequency	DC - 18.0 GHz
VSWR max.	1.06 + 0.005 x f(GHz)

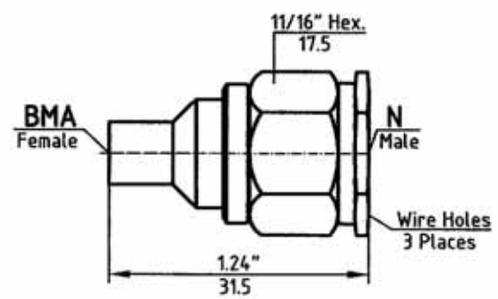

Part - No.	8001-BM51-02
Connectors	BMA-male to N-male
Frequency	DC - 18.0 GHz
VSWR max.	1.06 + 0.005 x f(GHz)

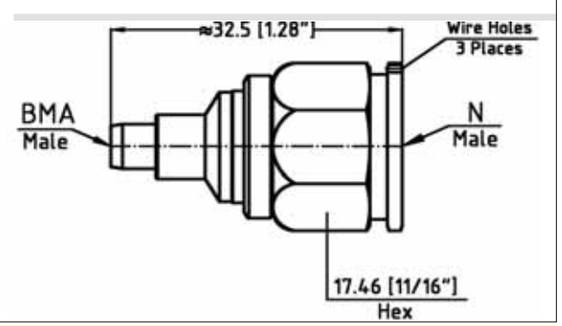

Dimensions shown are Inches over Millimeters or vice versa. Standard units have stainless finish (last 2 digits of the P/N are -02). Interfaces are per DIN 47 223, DIN 47 226, IEC 169-4, IEC 169-7, IEC 169-8, IEC 457-2, IEC 60169-5, IEEE 287, MIL-PRF-39012, MIL DTL-24044, MIL DTL-3643,MIL-STD-348B, where applicable

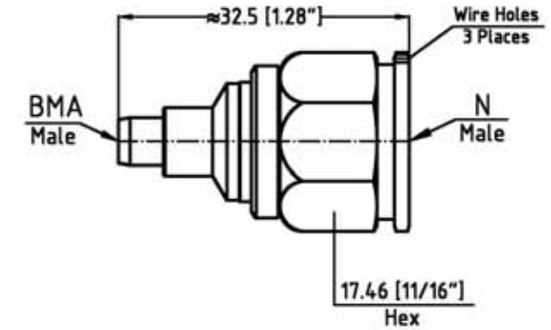

Part - No.	8U01-BM51-02
Connectors	BMA-male to N-male
Frequency	DC - 18.0 GHz
VSWR max.	1.06 + 0.005 x f(GHz)

Higher Temperature Application

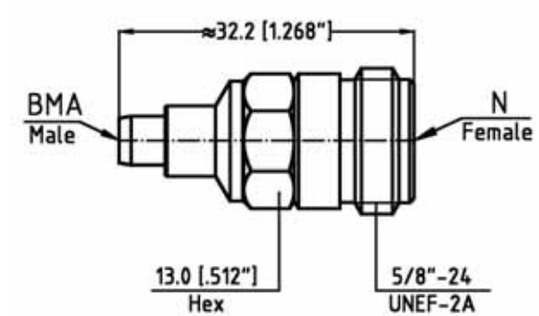

Part - No.	8001-BM61-02
Connectors	BMA-male to N-fem.
Frequency	DC - 18.0 GHz
VSWR max.	1.06 + 0.005 x f(GHz)

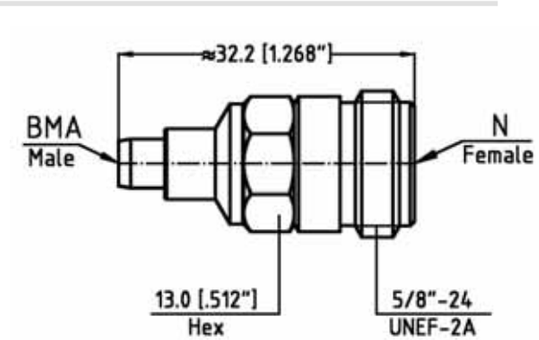

Part - No.	8U01-BM61-02
Connectors	BMA-male to N-fem.
Frequency	DC - 18.0 GHz
VSWR max.	1.06 + 0.005 x f(GHz)

Higher Temperature Application

You do not find the Adapter you need for an application? You need technical support? You need price and delivery information? Please contact your nearest Spectrum Representative, or please contact us direct.

Telephone: +49-89-3548-040 Facsimile: +49-89-3548-0490
e-mail: sales@spectrum-et.com www.spectrum-et.com

Dimensions shown are Inches over Millimeters or vice versa. Standard units have stainless finish (last 2 digits of the P/N are -02). Interfaces are per DIN 47 223, DIN 47 226, IEC 169-4, IEC 169-7, IEC 169-8, IEC 457-2, IEC 60169-5, IEEE 287, MIL-PRF-39012, MIL DTL-24044, MIL DTL-3643,MIL-STD-348B, where applicable

Part - No.	8001-BW21-02
Connectors	BMA-fem. to SMA-fem.
Frequency	DC - 18.0 GHz
VSWR max.	1.06 + 0.005 x f(GHz)

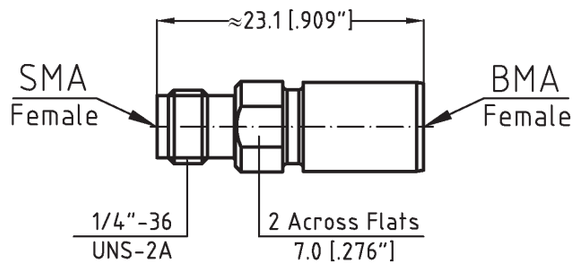

Part - No.	8002-BW21-02
Connectors	BMA-fem. to SMA-fem.
Frequency	DC - 18.0 GHz
VSWR max.	1.06 + 0.005 x f(GHz)

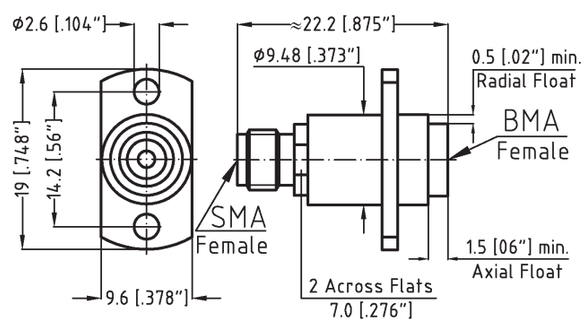

Part - No.	8003-BW21-02
Connectors	BMA-fem. to SMA-fem.
Frequency	DC - 18.0 GHz
VSWR max.	1.06 + 0.005 x f(GHz)

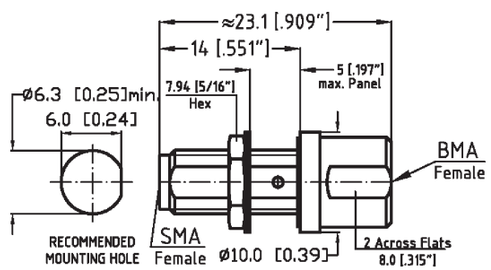

Part - No.	8004-BW21-02
Connectors	BMA-fem. to SMA-fem.
Frequency	DC - 22.0 GHz
VSWR max.	1.06 + 0.005 x f(GHz)

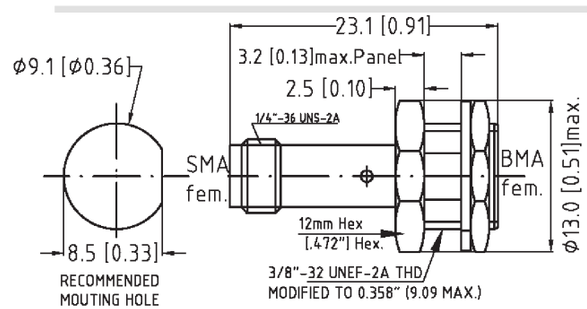

Dimensions shown are Inches over Millimeters or vice versa. Standard units have stainless finish (last 2 digits of the P/N are -02). Interfaces are per DIN 47 223, DIN 47 226, IEC 169-4, IEC 169-7, IEC 169-8, IEC 457-2, IEC 60169-5, IEEE 287, MIL-PRF-39012, MIL DTL-24044, MIL DTL-3643,MIL-STD-348B, where applicable

Spectrum Elektrotechnik GmbH
Germany
www.spectrum-et.com
sales@spectrum-et.com
Phone: +49 / 89 / 35 48 04 0
Fax: +49 / 89 / 35 48 04 90

Part - No.	8005-BW21-02
Connectors	BMA-fem. to SMA-fem.
Frequency	DC - 18.0 GHz
VSWR max.	1.06 + 0.005 x f(GHz)

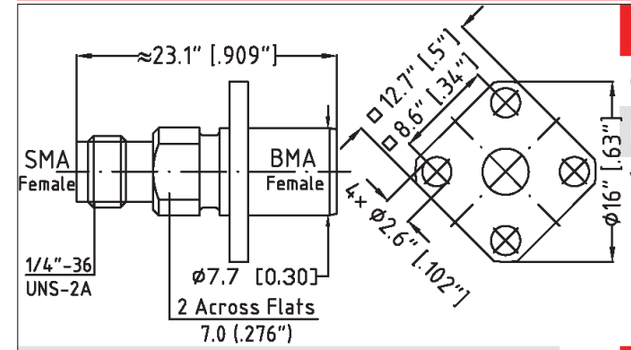

Part - No.	8001-BW11-02
Connectors	BMA-fem. to SMA-male
Frequency	DC - 18.0 GHz
VSWR max.	1.06 + 0.005 x f(GHz)

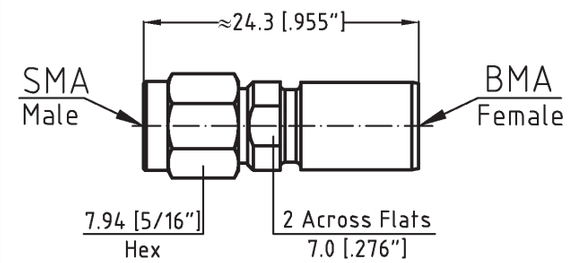

Part - No.	8002-BM21-02
Connectors	BMA-male to SMA-fem.
Frequency	DC - 18.0 GHz
VSWR max.	1.06 + 0.005 x f(GHz)

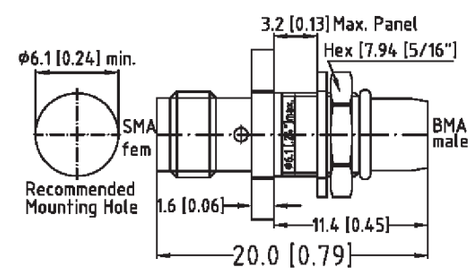

Part - No.	8001-BM21-02
Connectors	BMA-male to SMA-fem.
Frequency	DC - 18.0 GHz
VSWR max.	1.06 + 0.005 x f(GHz)

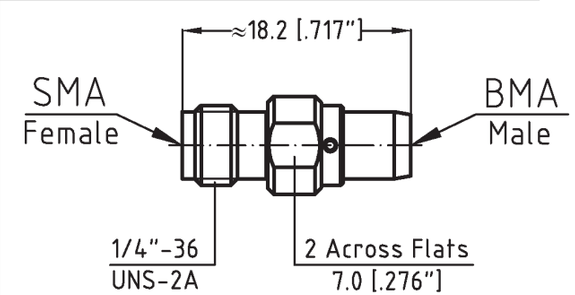

Dimensions shown are Inches over Millimeters or vice versa. Standard units have stainless finish (last 2 digits of the P/N are -02). Interfaces are per DIN 47 223, DIN 47 226, IEC 169-4, IEC 169-7, IEC 169-8, IEC 457-2, IEC 60169-5, IEEE 287, MIL-PRF-39012, MIL DTL-24044, MIL DTL-3643,MIL-STD-348B, where applicable

Spectrum Elektrotechnik GmbH
Germany
www.spectrum-et.com
sales@spectrum-et.com
Phone: +49 / 89 / 35 48 04 0
Fax: +49 / 89 / 35 48 04 90

Part - No.	8001-BM11-02
Connectors	BMA-male to SMA-male
Frequency	DC - 18.0 GHz
VSWR max.	1.06 + 0.005 x f(GHz)

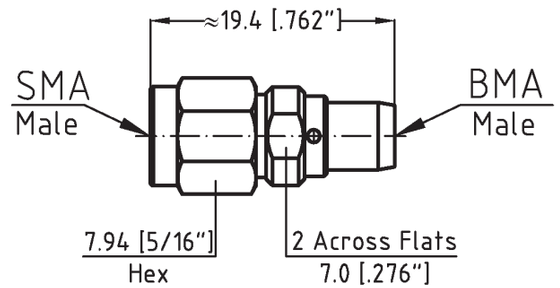

You need something different, or you need technical assistance? Please give us a call for immediate support from Marketing and/or from Engineering, or you may also call your nearest Spectrum Representative.

In-Series and Between-Series Adapters BNC

If your choice of BNC Adapter is not shown in this section, please refer to the Table below to determine other possible locations. Should you not find your adapter listed in any section, please consult the factory or your Spectrum Elektrotechnik Area Representative.

BNC	Section	Page
BNC Overview & Specifications	H	1
BNC In-Series		4
Between Series BNC to N	K	28
Between Series BNC to SMA	P	14
Between Series BNC to TNC	X	24
Between Series BNC to 1.8/5.6	FF	8

Although our catalog incorporates a very comprehensive range of products, due to our program of continuous development, there is no way that it will contain every product we manufacture. Please consult the factory for the product you require.
To improve our Standard Products we reserve the right to make changes. Specifications are therefore subject to change without notice.

BNC Specifications to MIL-PRF-39012

The specifications below are general specifications for all BNC connectors. Specific Data for VSWR, Insertion Loss, R.F. leakage, etc., are available from the factory upon request. Specifications in the following table are recommended for any procurement documents or drawings. In the event of any conflict between these specifications and General Specifications MIL-PRF-39012, these specifications shall govern. These specifications are subject to change according to the latest revision.

REQUIREMENT	GENERAL SPECIFICATIONS
Standard Materials	STEEL corrosion resistant 1.4305 per DIN EN 10088; ASTM-A582 (303), or 1.4404 (316L) respectively. ALUMINUM AlMg4.5Mn per 1706, AlMgSi0.5 per 1706, AlMgSi1 per 1706 (6061-T6 per QQ-A-225/8). BRASS CuZn39Pb3 per DIN 17660 (QQ-B-626 (ASTM-B124), half hard). COPPER BERYLLIUM 33-25 CuBe2PbH per DIN17666(DIN CEN/TS;DIN SPEC 9700)(QQ-C530). TFE Fluorocarbon per DIN 52900 (ASTM-D-1710), or Thermoplast per ISO 10350, or PEI per in-house specification respectively for higher temperature applications. SILICONE RUBBER per DIN ISO 3601)(A-A-59588,Class IIB) Gr. 50 - 75. BORIUM NITRITE Dielectric for high power applications per in-house specification
Finish for COPPER BERYLLIUM STAINLESS STEEL ALUMINUM BRASS VARIOUS	Center Contacts shall be gold plated to a minimum thickness of .00005-inch in accordance with ASTM-B-488, Type III, Code C, Class 1.25 shall be passivated per ASTM-A967 Conductive Parts shall have an iridited finish per MIL-DTL-5541 Other parts, such as Coupling Nuts and Back-Bodies shall be anodized per MIL-A-8625. .00003 inch (0.8 µm) min. gold plating per MIL-DTL-45204, or nickel plating per QQ-N-290, as specified. Imoloy .0001 inch (2.5 µm) min. plating, consisting of 55% Copper / 20% Zinc / 25% Tin (on special request).
Design	The design shall be such that the outline dimensions in this catalog are met. In addition, the assembled connector shall meet the interface dimensions.
ELECTRICAL	
Frequency Range	DC - 10.0 GHz min.
Insulation Resistance	The insulation resistance shall not be less than 5,000 megohms.
Voltage Standing Wave Ratio (VSWR)	1.06+.01 x f (GHz) max.
Contact Resistance	The center contact resistance drop shall not exceed 1.5 milliohms and the outer contact resistance drop shall not exceed 1.0 milliohms.
Dielectric Withstanding Voltage	The magnitude of the test voltage shall be 1,500 volts rms at sea level.
RF High Potential Withstanding Voltage	The RF high potential withstanding voltage is 1,000 volts rms at 5 MHz. Leakage is not applicable.
RF Leakage	- 55 dB min. (at 2 - 3 GHz)
Insertion Loss	0.2 dB max. at 3GHz
MECHANICAL	
Connector Durability	The connector is to be tested and its mating connector shall be subjected to 500 insertion and withdrawal cycles at 12 cycles per minute max. The connector shall show no evidence of mechanical failure and the connector shall meet the mating characteristic requirements.
Cable Retention Force	40 pounds (178 N) min.
Coupling Nut Retention Force	Not applicable for Female connectors. For male connectors, the axial force is 100 lbs (445 N) max.. The max. torque is not applicable.
Force to Engage and Disengage	The torque required to engage and disengage shall not exceed 2.5 inch-pounds (0.282 Nm).
Longitudinal Force max.	Longitudinal force is 3 lbs. (13.3 N).
Mating Characteristics	See interface dimensions shown on next page. Applicable to Females only: oversize pin .055 inch (1.4 mm) max. dia. pin; .080 inch (2.03 mm) deep; insertion force 2 lbs. (8.9 N) max. with .054 inch (1.37 mm) min. dia. pin; withdrawal force 2.00 oz (.556 N) min. with .052 inch (1.32 mm) max. dia. pin.
Recommended Mating Torque	Recommended Mating Torque is not applicable.
ENVIRONMENTAL	
Corrosion (Salt Spray)	Specification MIL-STD-202, Method 101, Test Condition B. The salt solution shall be 5%.
Vibration	Specification MIL-STD-202, Method 204, Test Condition B.
Shock	Specification MIL-STD-202, Method 213, Test Condition G.
Thermal Shock	Specification MIL-STD-202, Method 107, Test Condition B, except high temperature shall be + 200°C.
Moisture Resistance	Specification MIL-STD-202, Method 106. Step 7b (vibration) shall be omitted. Insulation resistance shall be 200 megohms min. within 5 minutes of removal from humidity.
Corona Level	The connector shall not exhibit breakdown (corona) when the applied voltage is 375 volts rms and the altitude is 70,000 feet.

Dimensions shown are Inches over Millimeters or vice versa. Standard units have stainless finish (last 2 digits of the P/N are -02). Interfaces are per DIN 47 223, DIN 47 226, IEC 169-4, IEC 169-7, IEC 169-8, IEC 457-2, IEC 60169-5, IEEE 287, MIL-PRF-39012, MIL DTL-24044, MIL DTL-3643,MIL-STD-348B, where applicable

Spectrum Elektrotechnik GmbH
Germany
www.spectrum-et.com
sales@spectrum-et.com
Phone: +49 / 89 / 35 48 04 0
Fax: +49 / 89 / 35 48 04 90

BNC Interface Mating Dimensions (Per MIL-PRF-39012)

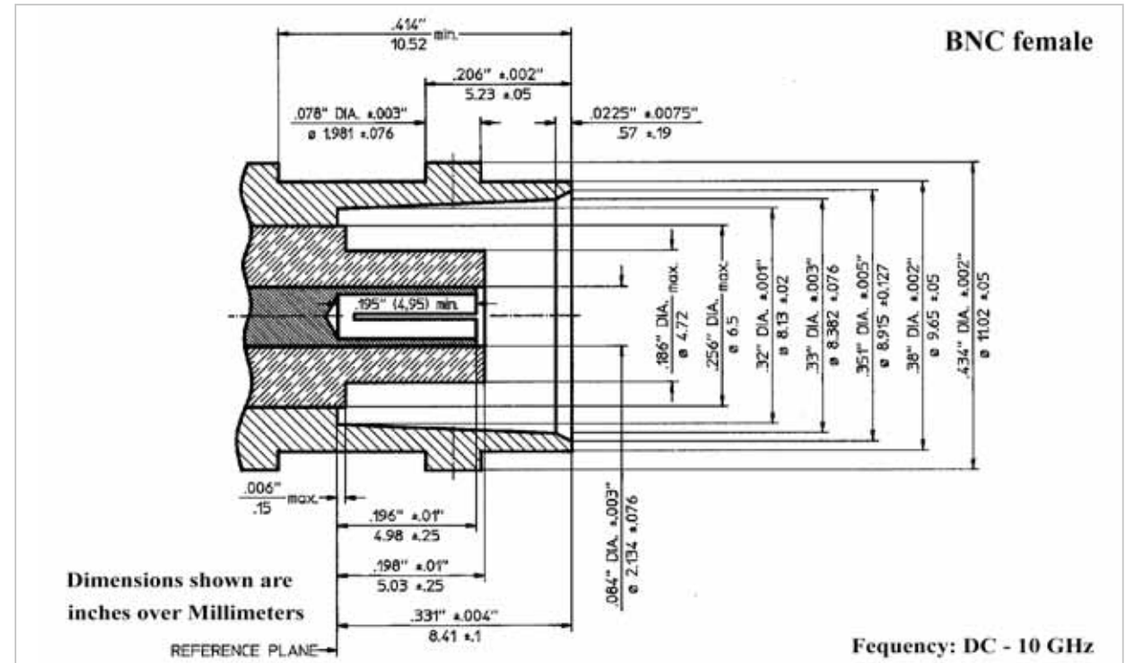

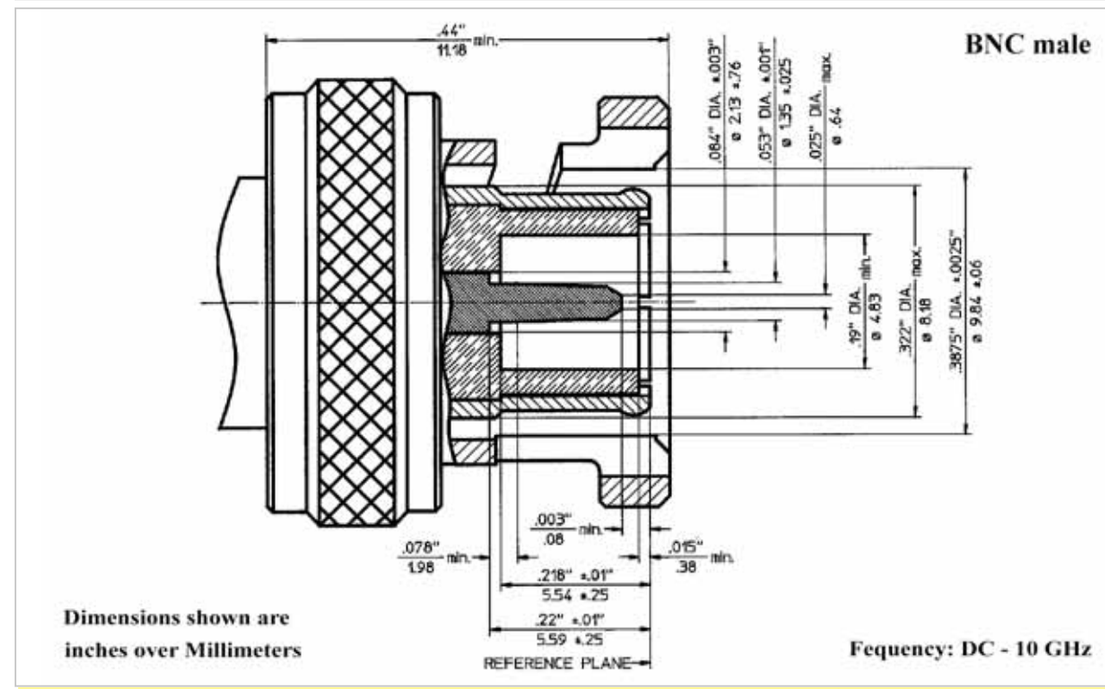

Dimensions shown are Inches over Millimeters or vice versa. Standard units have stainless finish (last 2 digits of the P/N are -02). Interfaces are per DIN 47 223, DIN 47 226, IEC 169-4, IEC 169-7, IEC 169-8, IEC 457-2, IEC 60169-5, IEEE 287, MIL-PRF-39012, MIL DTL-24044, MIL DTL-3643,MIL-STD-348B, where applicable

Spectrum Elektrotechnik GmbH
Germany
www.spectrum-et.com
sales@spectrum-et.com
Phone: +49 / 89 / 35 48 04 0
Fax: +49 / 89 / 35 48 04 90

Part - No.	8001-8181-02
Connectors	BNC-fem. to BNC-fem.
Frequency	DC - 10.0 GHz
VSWR max.	1.06 + 0.01 x f(GHz)

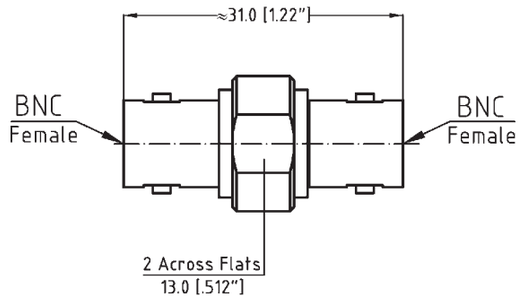

Part - No.	8002-8181-02
Connectors	BNC-fem. to BNC-fem.
Frequency	DC - 10.0 GHz
VSWR max.	1.06 + 0.01 x f(GHz)

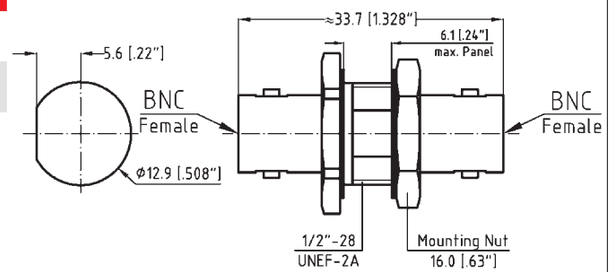

Part - No.	8003-8181-02
Connectors	BNC-fem. to BNC-fem.
Frequency	DC - 10.0 GHz
VSWR max.	1.06 + 0.01 x f(GHz)

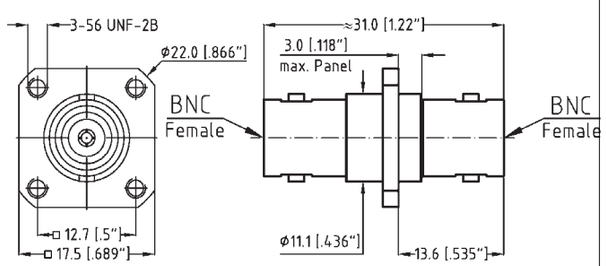

Part - No.	8001-7181-02
Connectors	BNC-male to BNC-fem.
Frequency	DC - 10.0 GHz
VSWR max.	1.06 + 0.01 x f(GHz)

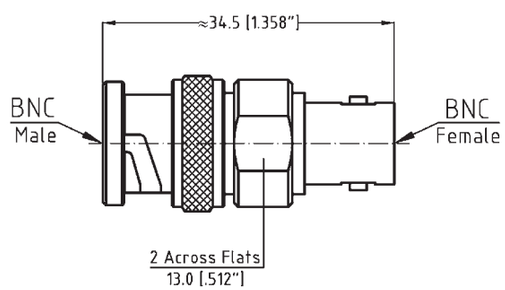

Dimensions shown are Inches over Millimeters or vice versa. Standard units have stainless finish (last 2 digits of the P/N are -02). Interfaces are per DIN 47 223, DIN 47 226, IEC 169-4, IEC 169-7, IEC 169-8, IEC 457-2, IEC 60169-5, IEEE 287, MIL-PRF-39012, MIL DTL-24044, MIL DTL-3643,MIL-STD-348B, where applicable

Spectrum Elektrotechnik GmbH
Germany
www.spectrum-et.com
sales@spectrum-et.com
Phone: +49 / 89 / 35 48 04 0
Fax: +49 / 89 / 35 48 04 90

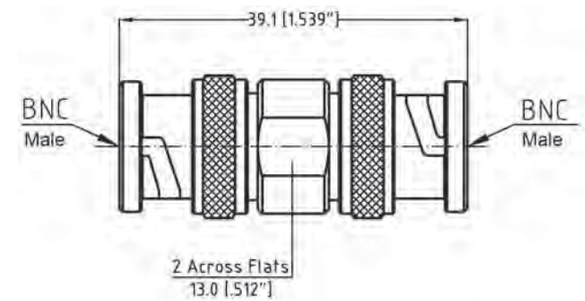

Part - No.	8001-7171-02
Connectors	BNC-male to BNC-male
Frequency	DC - 10.0 GHz
VSWR max.	1.06 + 0.01 x f(GHz)

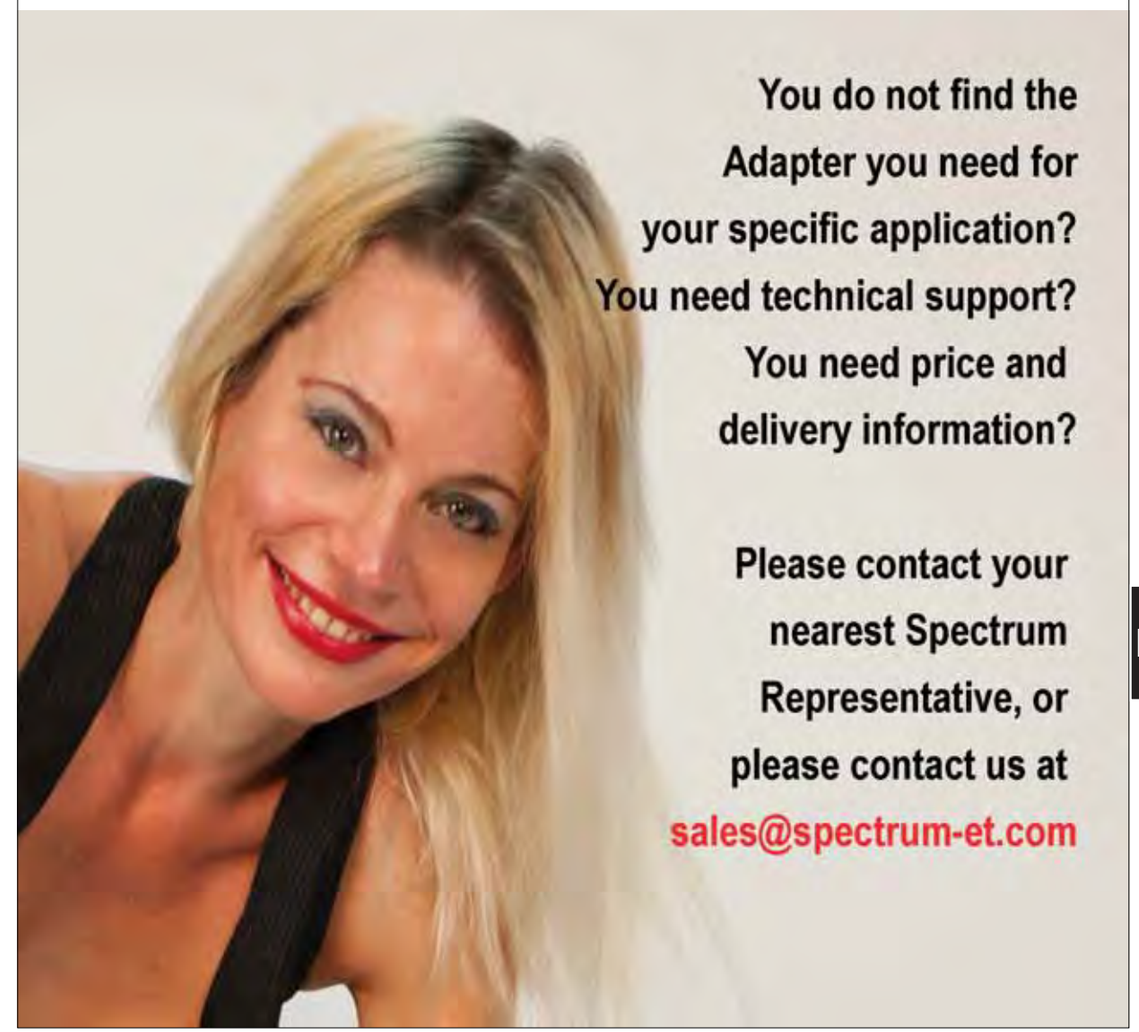

Dimensions shown are Inches over Millimeters or vice versa. Standard units have stainless finish (last 2 digits of the P/N are -02). Interfaces are per DIN 47 223, DIN 47 226, IEC 169-4, IEC 169-7, IEC 169-8, IEC 457-2, IEC 60169-5, IEEE 287, MIL-PRF-39012, MIL DTL-24044, MIL DTL-3643,MIL-STD-348B, where applicable

Spectrum Elektrotechnik GmbH
Germany
www.spectrum-et.com
sales@spectrum-et.com
Phone: +49 / 89 / 35 48 04 0
Fax: +49 / 89 / 35 48 04 90

Phase Adjusters

Part Number	Con-nec-tors	Fre-quency Range (GHz)	VSWR max.	Inser-tion Loss max. (dB)	Phase Shift min. (°)	No. of Turns	Phase Shift Deg/ GHz/ Turn	Time Delay min. (psec.)	Time Delay max. (psec.)	Tem-perature (°C)	Weight max. (g)
LS-0002-YYYY[1]	div.	DC - 2	1.2:1	0.3	85	37	1.15	393	516	-65 to +125	98-220[2]
LS-0103-6161	Nf	DC - 3	1.15:1	0.4	540	cont.		1826	2328		700
LS-0203-6161				0.9	1080			3693	4694		1200
LS-0012-YYYY[1]	div.	DC - 12	1.3:1	0.8	520	37		406	530		114-234[2]
LS-0112-XXXX[3]	SMA	DC-12.0	1.25:1	0.4	230	16.5	1.2	238	293	-65 to +125	70
LS-A112-XXXX[3]											47
LS-0212-1121											70
LS-A212-1121											47
LS-0118-XXXX[3]											70
LS-A118-XXXX[3]											47
LS-0218-1121											70
LS-A218-1121											47
LS-0118-5161	N			0.6	350			300	355	-65/+70	105
LS-U118-5161										-65/+165	
LS-0018-YYYY[1]	div.	DC - 18	1.5:1	1.0	770	37	1.1	406	530		98-220[2]
LS-0121-XXXX[3]	SMA	DC-20.0	1.30:1	0.8	500	16.5	1.2	238	293	-65 to +125	70
LS-A121-XXXX[3]											47
LS-0221-1121											70
LS-A221-1121											47
LS-0321-1121			1.31:1		500	35	0.6	236.7	290.5		30
LS-0170-1121			1.26:1	0.26	127	13.5	0.36	109.2	122.8		9
LS-S008-1121			1.50:1	0.4	155	10	0.6	118.6	135.1		20
LS-P140-KFKM	2.92 mm	DC-40.0	1.2:1	0.6	590	12	1.2	168	208	-65 to +65	51
LS-0140-KFKM			1.4:1								49
LS-P150-HFHM	2.40 mm	DC-50.0	1.3:1	0.8	400	7		172	195		55
LS-0150-HFHM			1.5:1								53
LS-P165-VFVM	1.85 mm	DC-63.0	1.4:1	0.8	600	8		167	195		55
LS-0165-VFVM			1.5:1								53

[1] div.: Connector Configuration available: SMA, male and female; N, male and female; TNC male and female
[2] Weight depends on connector configuration
[3] SMA Connector Configuration available: male/female; male/male; female/female; female/male

Spectrum Elektrotechnik GmbH when Quality is needed
80905 Munich, Germany P.O. Box 450533
Telephone: +49-89-3548-040 Facsimile: +49-89-3548-0490
WWW.SPECTRUM-ET.COM Email: sales@spectrum-et.com

In-Series and Between-Series Adapters C

If your choice of C Adapter is not shown in this section, please refer to the Table below to determine other possible locations. Should you not find your adapter listed in any section, please consult the factory or your Spectrum Elektrotechnik Area Representative.

C	Section	Page
C Overview & Specifications	I	1
Between Series C to N		4

Although our catalog incorporates a very comprehensive range of products, due to our program of continuous development, there is no way that it will contain every product we manufacture. Please consult the factory for the product you require.
To improve our Standard Products we reserve the right to make changes. Specifications are therefore subject to change without notice.

Dimensions shown are Inches over Millimeters or vice versa. Standard units have stainless finish (last 2 digits of the P/N are -02). Interfaces are per DIN 47 223, DIN 47 226, IEC 169-4, IEC 169-7, IEC 169-8, IEC 457-2, IEC 60169-5, IEEE 287, MIL-PRF-39012, MIL DTL-24044, MIL DTL-3643,MIL-STD-348B, where applicable

Type C Specifications to MIL-PRF-39012

The specifications below are general specifications for all C connectors. Specific Data for VSWR, Insertion Loss, R.F. leakage, etc., are available from the factory upon request. Specifications in the following table are recommended for any procurement documents or drawings. In the event of any conflict between these specifications and General Specifications MIL-PRF-39012, these specifications shall govern. These specifications are subject to change according to the latest revision.

REQUIREMENT	GENERAL SPECIFICATIONS
Standard Materials	STEEL corrosion resistant 1.4305 per DIN EN 10088; ASTM-A582 (303), or 1.4404 (316L) respectively. ALUMINUM AlMg4.5Mn per DIN EN 1706, AlMgSi0.5 per DIN EN 1706, AlMgSi1 per DIN EN 1706 (6061-T6 per QQ-A-225/8). BRASS CuZn39Pb3 per DIN 17660 (QQ-B-626 (ASTM-B124), half hard). COPPER BERYLLIUM 33-25 CuBe2PbH per DIN17666(DIN CEN/TS;DIN SPEC 9700)(QQ-C530). TFE Fluorocarbon per DIN 52900 (ASTM-D-1710) SILICONE RUBBER per DIN ISO 3601 (A-A-59588,Class IIB) Gr. 50 - 75. BORIUM NITRITE Dielectric for high power applications per in-house specification
Finish for COPPER BERYLLIUM STAINLESS STEEL ALUMINUM BRASS VARIOUS	Center Contacts shall be gold plated to a minimum thickness of .00005-inch in accordance with ASTM-B-488, Type III, Code C, Class 1.25 shall be passivated per ASTM-A967 Conductive Parts shall have an iridited finish per MIL-DTL-5541 Other parts, such as Coupling Nuts and Back-Bodies shall be anodized per MIL-A-8625. .00003 inch (0.8 µm) min. gold plating per MIL-DTL-45204, or nickel plating per QQ-N-290, as specified. Imoloy .0001 inch (2.5 µm) min. plating, consisting of 55% Copper / 20% Zinc / 25% Tin (on special request).
Design	The design shall be such that the outline dimensions in this catalog are met. In addition, the assembled connector shall meet the interface dimensions.
ELECTRICAL	
Frequency Range	DC - 10.0 GHz min.
Insulation Resistance	The insulation resistance shall not be less than 5,000 megohms.
Voltage Standing Wave Ratio (VSWR)	1.03 + 0.01 x f (GHz)
Contact Resistance	The center contact resistance drop shall not exceed 1.0 milliohms and the outer contact resistance drop shall not exceed 0.35 milliohms.
Dielectric Withstanding Voltage	The magnitude of the test voltage shall be 3,000 volts rms at sea level.
RF High Potential Withstanding Voltage	The RF high potential withstanding voltage is 2,500 volts rms at 5 MHz. Leakage is not applicable.
RF Leakage	- 55 dB min. (at 2 - 3 GHz)
Insertion Loss	(.05 SQT(f(GHz))) dB
MECHANICAL	
Connector Durability	The connector is to be tested and its mating connector shall be subjected to 500 insertion and withdrawal cycles at 12 cycles per minute max. The connector shall show no evidence of mechanical failure and the connector shall meet the mating characteristic requirements.
Cable Retention Force	90 pounds (400 N) min.
Coupling Nut Retention Force	Not applicable for Female connectors. For male connectors, the axial force is 100 lbs (445 N) max.. The max. torque is not applicable.
Force to Engage and Disengage	The torque required to engage and disengage shall not exceed 4 inch-pounds (0.452 Nm).
Longitudinal Force max.	Longitudinal force is 4.5 lbs. (20 N).
Mating Characteristics	See interface dimensions shown on next page. Applicable to Females only: oversize pin .093 inch (2.36 mm) max. dia. pin; .125 inch (3.2 mm) deep; insertion force 2 lbs. (8.9 N) max. with .092 inch (2.34 mm) min. dia. pin; withdrawal force 2.00 oz (.556 N) min. with .090 inch (2.29 mm) max. dia. pin.
Recommended Mating Torque	Not applicable.
ENVIRONMENTAL	
Corrosion (Salt Spray)	Specification MIL-STD-202, Method 101, Test Condition B. The salt solution shall be 5%.
Vibration	Specification MIL-STD-202, Method 204, Test Condition B.
Shock	Specification MIL-STD-202, Method 213, Test Condition I.
Thermal Shock	Specification MIL-STD-202, Method 107, Test Condition B, except high temperature shall be + 200°C.
Moisture Resistance	Specification MIL-STD-202, Method 106. Step 7b (vibration) shall be omitted. Insulation resistance shall be 200 megohms min. within 5 minutes of removal from humidity.
Corona Level	The connector shall not exhibit breakdown (corona) when the applied voltage is 750 volts rms and the altitude is 70,000 feet.

Dimensions shown are Inches over Millimeters or vice versa. Standard units have stainless finish (last 2 digits of the P/N are -02). Interfaces are per DIN 47 223, DIN 47 226, IEC 169-4, IEC 169-7, IEC 169-8, IEC 457-2, IEC 60169-5, IEEE 287, MIL-PRF-39012, MIL DTL-24044, MIL DTL-3643,MIL-STD-348B, where applicable

Spectrum Elektrotechnik GmbH
Germany
www.spectrum-et.com
sales@spectrum-et.com
Phone: +49 / 89 / 35 48 04 0
Fax: +49 / 89 / 35 48 04 90

Interface Mating Dimensions C per MIL-C-39012 (IEC 169-7))

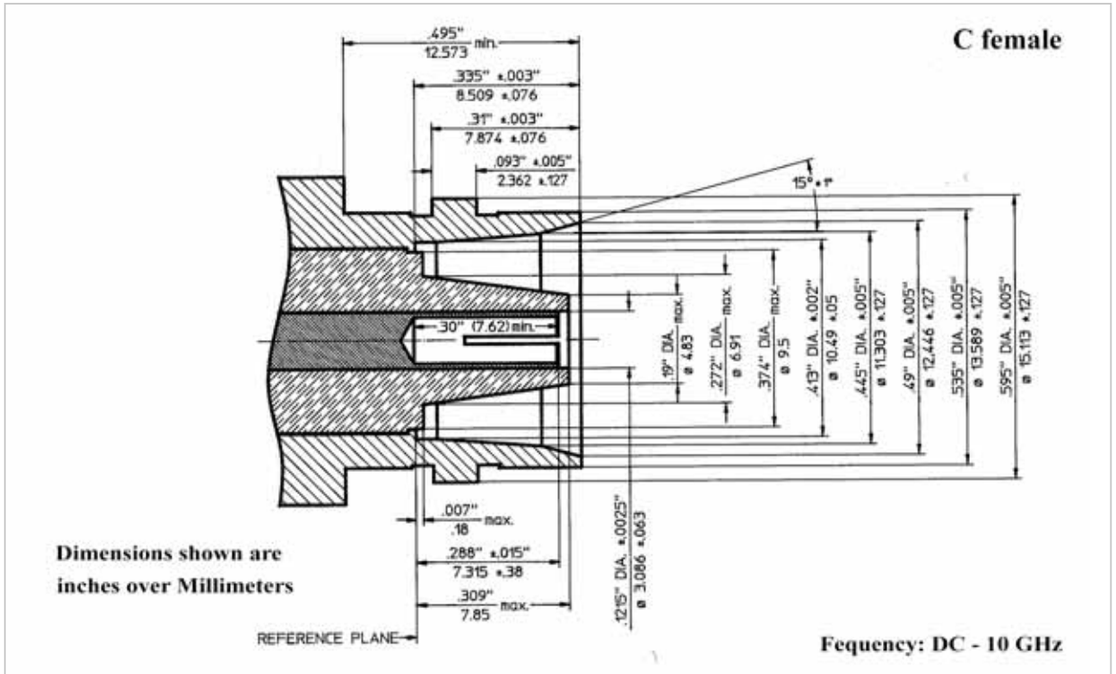

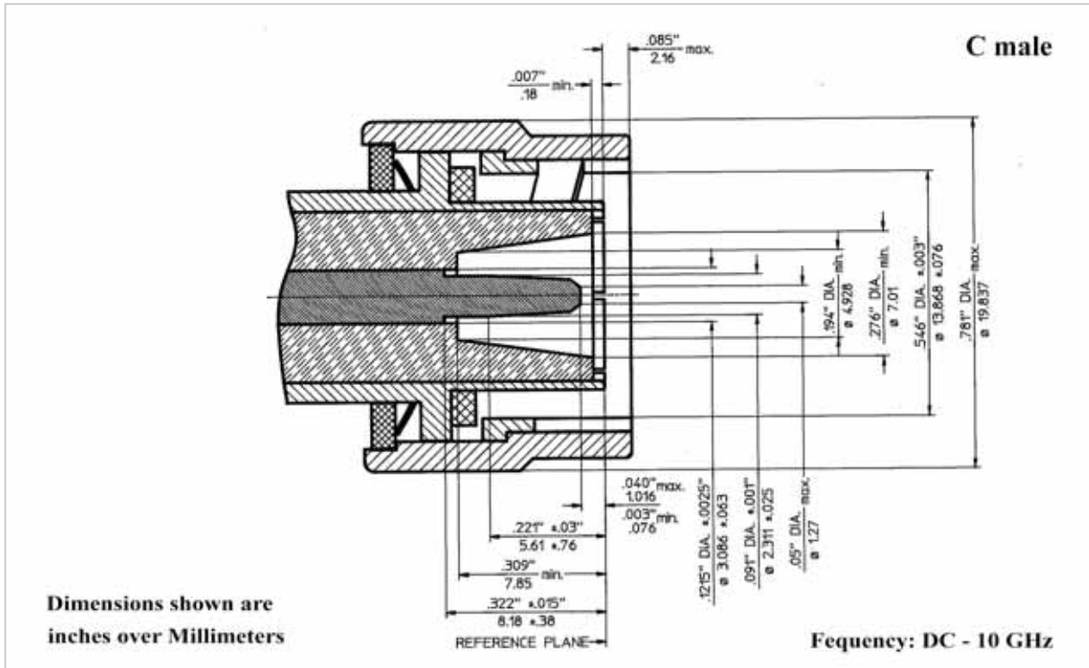

Dimensions shown are Inches over Millimeters or vice versa. Standard units have stainless finish (last 2 digits of the P/N are -02). Interfaces are per DIN 47 223, DIN 47 226, IEC 169-4, IEC 169-7, IEC 169-8, IEC 457-2, IEC 60169-5, IEEE 287, MIL-PRF-39012, MIL DTL-24044, MIL DTL-3643,MIL-STD-348B, where applicable

Spectrum Elektrotechnik GmbH
Germany
www.spectrum-et.com
sales@spectrum-et.com
Phone: +49 / 89 / 35 48 04 0
Fax: +49 / 89 / 35 48 04 90

Part - No.	8001-6189-02
Connectors	C-fem. to N-fem.
Frequency	DC - 10.0 GHz
VSWR max.	1.03 + 0.01 x f(GHz)

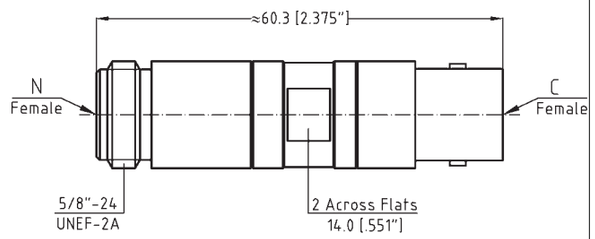

Part - No.	8001-6188-02
Connectors	C-male to N-fem.
Frequency	DC - 10.0 GHz
VSWR max.	1.03 + 0.01 x f(GHz)

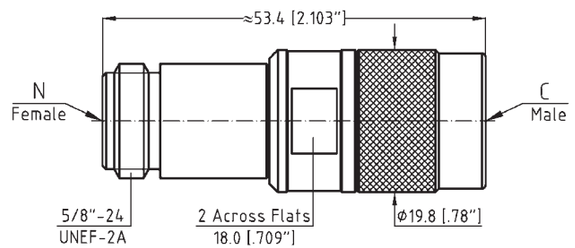

Part - No.	8001-5189-02
Connectors	C-fem. to N-male
Frequency	DC - 10.0 GHz
VSWR max.	1.03 + 0.01 x f(GHz)

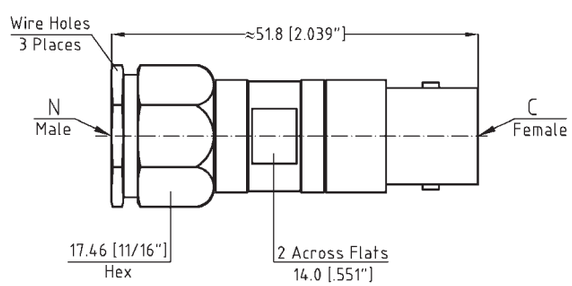

Part - No.	8001-5188-02
Connectors	C-male to N-male
Frequency	DC - 10.0 GHz
VSWR max.	1.03 + 0.01 x f(GHz)

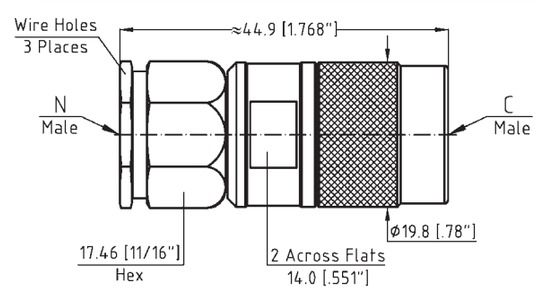

I

Dimensions shown are Inches over Millimeters or vice versa. Standard units have stainless finish (last 2 digits of the P/N are -02). Interfaces are per DIN 47 223, DIN 47 226, IEC 169-4, IEC 169-7, IEC 169-8, IEC 457-2, IEC 60169-5, IEEE 287, MIL-PRF-39012, MIL DTL-24044, MIL DTL-3643,MIL-STD-348B, where applicable

Spectrum Elektrotechnik GmbH
Germany
www.spectrum-et.com
sales@spectrum-et.com
Phone: +49 / 89 / 35 48 04 0
Fax: +49 / 89 / 35 48 04 90

In-Series and Between-Series Adapters HN

If your choice of HN Adapter is not shown in this section, please refer to the Table below to determine other possible locations. Should you not find your adapter listed in any section, please consult the factory or your Spectrum Elektrotechnik Area Representative.

HN	Section	Page
HN Overview & Specifications	J	1
Between Series HN to N		4

Although our catalog incorporates a very comprehensive range of products, due to our program of continuous development, there is no way that it will contain every product we manufacture. Please consult the factory for the product you require.
To improve our Standard Products we reserve the right to make changes. Specifications are therefore subject to change without notice.

J

Dimensions shown are Inches over Millimeters or vice versa. Standard units have stainless finish (last 2 digits of the P/N are -02). Interfaces are per DIN 47 223, DIN 47 226, IEC 169-4, IEC 169-7, IEC 169-8, IEC 457-2, IEC 60169-5, IEEE 287, MIL-PRF-39012, MIL DTL-24044, MIL DTL-3643,MIL-STD-348B, where applicable

Spectrum Elektrotechnik GmbH
Germany
www.spectrum-et.com
sales@spectrum-et.com
Phone: +49 / 89 / 35 48 04 0
Fax: +49 / 89 / 35 48 04 90

HN Specifications to MIL-DTL-3643

The specifications below are general specifications for all HN connectors. Specific Data for VSWR, Insertion Loss, R.F. leakage, etc., are available from the factory upon request. Specifications in the following table are recommended for any procurement documents or drawings. In the event of any conflict between these specifications and General Specifications MIL-DTL-3643, these specifications shall govern. These specifications are subject to change according to the latest revision.

REQUIREMENT	GENERAL SPECIFICATIONS
Standard Materials	STEEL corrosion resistant 1.4305 per DIN EN 10088; ASTM-A582 (303), or 1.4404 (316L) respectively. ALUMINUM AlMg4.5Mn per DIN EN 1706, AlMgSi0.5 per DIN EN 1706, AlMgSi1 per DIN EN 1706 (6061-T6 per QQ-A-225/8). BRASS CuZn39Pb3 per DIN 17660 (QQ-B-626 (ASTM-B124), half hard). COPPER BERYLLIUM 33-25 CuBe2PbH per DIN17666(DIN CEN/TS;DIN SPEC 9700)(QQ-C530). TFE Fluorocarbon per DIN 52900 (ASTM-D-1710), SILICONE RUBBER per DIN ISO 3601)(A-A-59588,Class IIB) Gr. 50 - 75. BORIUM NITRITE Dielectric for high power applications per in-house specification
Finish for COPPER BERYLLIUM STAINLESS STEEL ALUMINUM BRASS VARIOUS	Center Contacts shall be gold plated to a minimum thickness of .00005-inch in accordance with ASTM-B-488, Type III, Code C, Class 1.25 shall be passivated per ASTM-A967 Conductive Parts shall have an iridited finish per MIL-DTL-5541 Other parts, such as Coupling Nuts and Back-Bodies shall be anodized per MIL-A-8625. .00003 inch (0.8 µm) min. gold plating per MIL-DTL-45204, or nickel plating per QQ-N-290, as specified. Imoloy .0001 inch (2.5 µm) min. plating, consisting of 55% Copper / 20% Zinc / 25% Tin (on special request).
Design	The design shall be such that the outline dimensions in this catalog are met. In addition, the assembled connector shall meet the interface dimensions.
ELECTRICAL	
Frequency Range	DC - 8.0 GHz min.
Insulation Resistance	The insulation resistance shall not be less than 5,000 megohms.
Voltage Standing Wave Ratio (VSWR)	1.06 + .009 x f (GHz)
Contact Resistance	The center contact resistance drop shall not exceed 1.0 milliohms and the outer contact resistance drop shall not exceed 0.2 milliohms.
Dielectric Withstanding Voltage	The magnitude of the test voltage shall be 5000 volts rms at sea level.
RF High Potential Withstanding Voltage	The RF high potential withstanding voltage is 1,500 volts rms at 5 MHz. Leakage is not applicable.
RF Leakage	- (95 - f (GHz)) dB
Insertion Loss	(.05 SQT(f(GHz))) dB
MECHANICAL	
Connector Durability	The connector is to be tested and its mating connector shall be subjected to 500 insertion and The connector is to be tested and its mating connector shall be subjected to 500 insertion and withdrawal cycles at 12 cycles per minute max. The connector shall show no evidence of mechanical failure and the connector shall meet the mating characteristic requirements.
Cable Retention Force	150 pounds (667 N) min.
Coupling Nut Retention Force	Not applicable for Female connectors. For male connectors, the axial force is 100 lbs (445 N) max. The torque is 30 inch-pounds (3.4 Nm) max.
Force to Engage and Disengage	The torque required to engage and disengage shall not exceed 6.2 inch-pounds (0.7 Nm).
Longitudinal Force max.	Longitudinal force is not applicable.
Mating Characteristics	See interface dimensions shown on next page.
Recommended Mating Torque	15 - 18 inch-pounds (1.7 - 2.0 Nm)
ENVIRONMENTAL	
Corrosion (Salt Spray)	Specification MIL-STD-202, Method 101, Test Condition B. The salt solution shall be 5%.
Vibration	Specification MIL-STD-202, Method 204, Test Condition B.
Shock	Specification MIL-STD-202, Method 213, Test Condition I.
Thermal Shock	Specification MIL-STD-202, Method 107, Test Condition B, except high temperature shall be +200°C
Moisture Resistance	Specification MIL-STD-202, Method 106. Step 7b (vibration) shall be omitted. Insulation resistance shall be 200 megohms min. within 5 minutes of removal from humidity.
Corona Level	Corona Level is not applicable.

Dimensions shown are Inches over Millimeters or vice versa. Standard units have stainless finish (last 2 digits of the P/N are -02). Interfaces are per DIN 47 223, DIN 47 226, IEC 169-4, IEC 169-7, IEC 169-8, IEC 457-2, IEC 60169-5, IEEE 287, MIL-PRF-39012, MIL DTL-24044, MIL DTL-3643,MIL-STD-348B, where applicable

Spectrum Elektrotechnik GmbH
Germany
www.spectrum-et.com
sales@spectrum-et.com
Phone: +49 / 89 / 35 48 04 0
Fax: +49 / 89 / 35 48 04 90

Interface Mating Dimensions HN (Per MIL-DTL-3643)

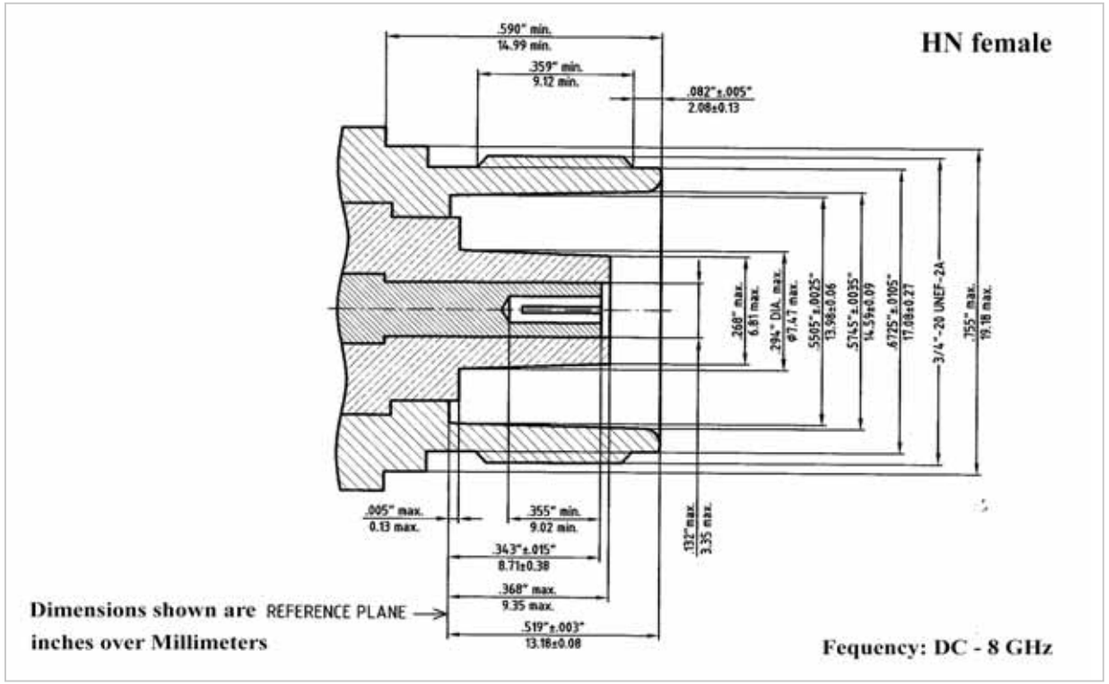

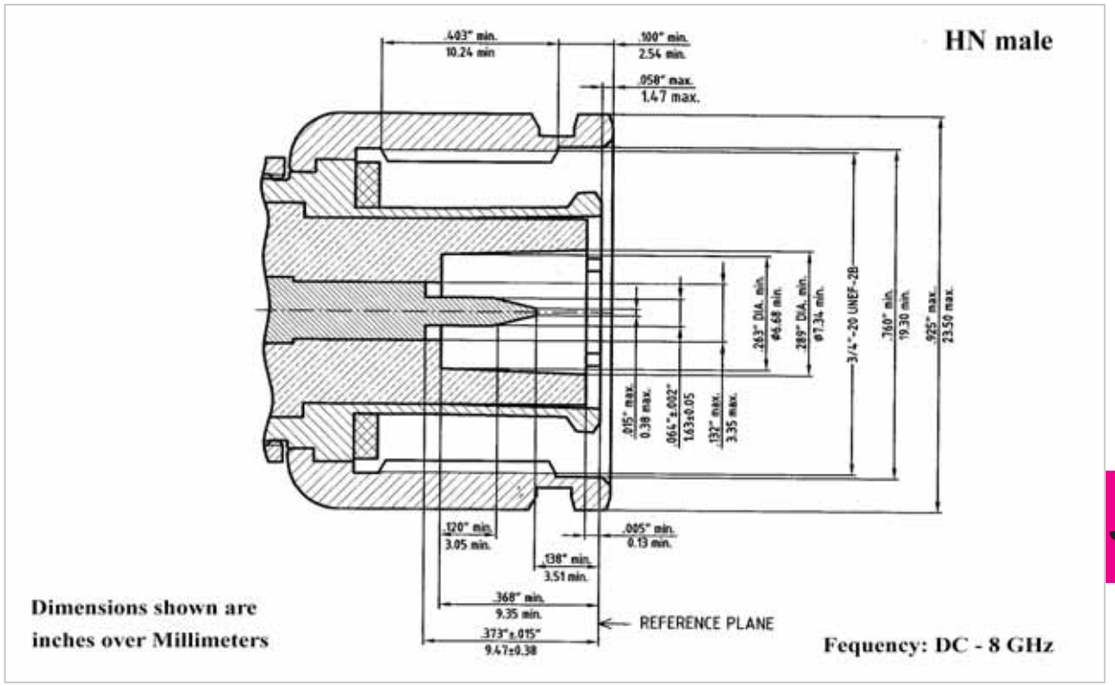

Dimensions shown are Inches over Millimeters or vice versa. Standard units have stainless finish (last 2 digits of the P/N are -02). Interfaces are per DIN 47 223, DIN 47 226, IEC 169-4, IEC 169-7, IEC 169-8, IEC 457-2, IEC 60169-5, IEEE 287, MIL-PRF-39012, MIL DTL-24044, MIL DTL-3643,MIL-STD-348B, where applicable

Spectrum Elektrotechnik GmbH
Germany
www.spectrum-et.com
sales@spectrum-et.com
Phone: +49 / 89 / 35 48 04 0
Fax: +49 / 89 / 35 48 04 90

Part - No.	8001-6168-02
Connectors	HN-fem. to N-fem.
Frequency	DC - 8.0 GHz
VSWR max.	1.06 + 0.009 x f(GHz)

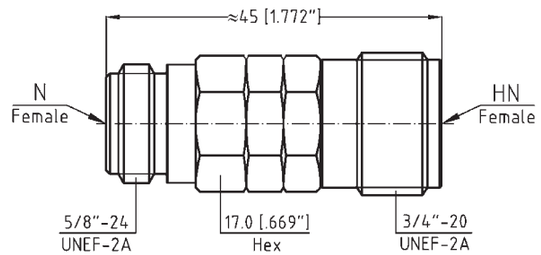

Part - No.	8001-5168-02
Connectors	HN-fem. to N-male
Frequency	DC - 8.0 GHz
VSWR max.	1.06 + 0.009 x f(GHz)

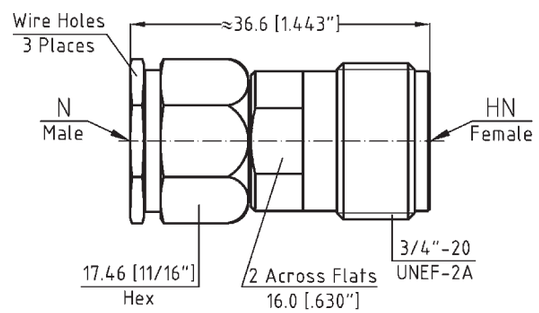

Part - No.	8001-6169-02
Connectors	HN-male to N-fem.
Frequency	DC - 8.0 GHz
VSWR max.	1.06 + 0.009 x f(GHz)

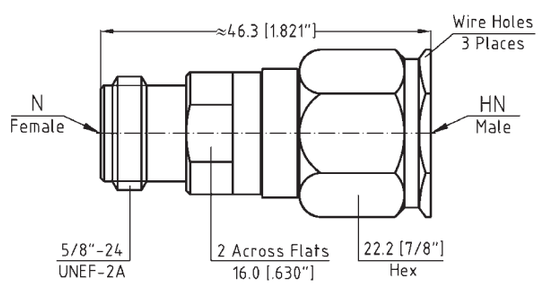

Part - No.	8001-5169-02
Connectors	HN-male to N-male
Frequency	DC - 8.0 GHz
VSWR max.	1.06 + 0.009 x f(GHz)

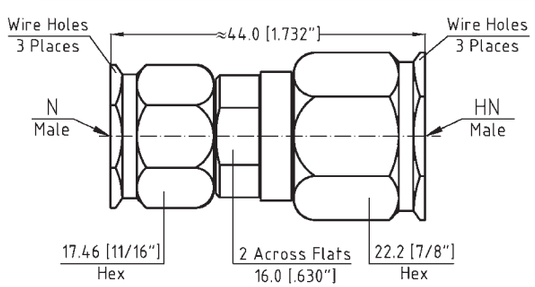

J

Dimensions shown are Inches over Millimeters or vice versa. Standard units have stainless finish (last 2 digits of the P/N are -02). Interfaces are per DIN 47 223, DIN 47 226, IEC 169-4, IEC 169-7, IEC 169-8, IEC 457-2, IEC 60169-5, IEEE 287, MIL-PRF-39012, MIL DTL-24044, MIL DTL-3643,MIL-STD-348B, where applicable

Spectrum Elektrotechnik GmbH
Germany
www.spectrum-et.com
sales@spectrum-et.com
Phone: +49 / 89 / 35 48 04 0
Fax: +49 / 89 / 35 48 04 90

In-Series and Between-Series Adapters N

If your choice of N Adapter is not shown in this section, please refer to the Table below to determine other possible locations. Should you not find your adapter listed in any section, please consult the factory or your Spectrum Elektrotechnik Area Representative.

N	Section	Page
N Overview & Specifications	K	1
N In-Series		4
N In-Series of equal electrical length		18
Between Series N to 2.4mm		20
Between Series N to 2.92mm		22
Between Series N to 3.5mm		24
Between Series N to 3.5mm of equal elecrical length		27
Between Series N to BNC		28
Between Series N to SMA		30
Between Series N to TNC		39
N In-Series Hermetically Sealed	EE	7
Between Series N to N Push-On and Slide-On	DD	17
Between Series N to 2.4mm NMD	CC	6
Between Series N to 2.92mm NMD		9
Between Series N to 3.5mm NMD		12
Between Series N to N NMD		15
Between Series N NMD to 2.4mm		14
Between Series N NMD to 3.5mm		14
Between Series N to N with Metric Thread	AA	8
Between Series N with Metric Thread to 3.5mm		9
Between Series N with Metric Thread to SMA		10
Between Series N to 7/16	F	5
Between Series N to 7/16 Push-On and Slide-On	DD	13
Between Series N to BMA	G	5
Between Series N to BNC	K	28
Between Series N to C	I	4
Between Series N to HN	J	4
Between Series N to SBX	L	5
Between Series N to SBY	M	5
Between Series N to SC	N	7
Between Series N to TNX	Z	7
Between Series N to TNC Reverse Sex	Y	4
Between Series N to TNC Push-On and Slide-On	DD	33
Between Series N to TNC Push-On and Slide-On Reverse Sex		47
Between Series N to TNC Hermetically Sealed	EE	10
Between Series N to 1.4/4.4	FF	4
Between Series N to 3 1/8		20

K

Dimensions shown are Inches over Millimeters or vice versa. Standard units have stainless finish (last 2 digits of the P/N are -02). Interfaces are per DIN 47 223, DIN 47 226, IEC 169-4, IEC 169-7, IEC 169-8, IEC 457-2, IEC 60169-5, IEEE 287, MIL-PRF-39012, MIL DTL-24044, MIL DTL-3643,MIL-STD-348B, where applicable

Spectrum Elektrotechnik GmbH
Germany
www.spectrum-et.com
sales@spectrum-et.com
Phone: +49 / 89 / 35 48 04 0
Fax: +49 / 89 / 35 48 04 90

N Specifications to MIL-PRF-39012

The specifications below are general specifications for all N connectors. Specific Data for VSWR, Insertion Loss, R.F. leakage, etc., are available from the factory upon request. Specifications in the following table are recommended for any procurement documents or drawings. In the event of any conflict between these specifications and General Specifications MIL-PRF-39012, these specifications shall govern. These specifications are subject to change according to the latest revision.

REQUIREMENT	GENERAL SPECIFICATIONS
Standard Materials	STEEL corrosion resistant 1.4305 per DIN EN 10088; ASTM-A582 (303), or 1.4404 (316L) respectively. ALUMINUM AlMg4.5Mn per DIN EN 1706, AlMgSi0.5 per DIN EN 1706, AlMgSi1 per DIN EN 1706 (6061-T6 per QQ-A-225/8). BRASS CuZn39Pb3 per DIN 17660 (QQ-B-626 (ASTM-B124), half hard). COPPER BERYLLIUM 33-25 CuBe2PbH per DIN17666(DIN CEN/TS;DIN SPEC 9700)(QQ-C530). TFE Fluorocarbon per DIN 52900 (ASTM-D-1710), or Thermoplast per DIN EN ISO 10350, or PEI per in-house specification respectively for higher temperature applications. SILICONE RUBBER per DIN ISO 3601)(A-A-59588,Class IIB) Gr. 50 - 75. BORIUM NITRITE Dielectric for high power applications per in-house specification
Finish for COPPER BERYLLIUM STAINLESS STEEL ALUMINUM BRASS VARIOUS	Center Contacts shall be gold plated to a minimum thickness of .00005-inch in accordance with ASTM-B-488, Type III, Code C, Class 1.25 shall be passivated per ASTM-A967 Conductive Parts shall have an iridited finish per MIL-DTL-5541 Other parts, such as Coupling Nuts and Back-Bodies shall be anodized per MIL-A-8625. .00003 inch (0.8 µm) min. gold plating per MIL-DTL-45204, or nickel plating per QQ-N-290, as specified. Imoloy .0001 inch (2.5 µm) min. plating, consisting of 55% Copper / 20% Zinc / 25% Tin (on special request).
Design	The design shall be such that the outline dimensions in this catalog are met. In addition, the assembled connector shall meet the interface dimensions.
ELECTRICAL	
Frequency Range	DC - 18.0 GHz min., optional DC - 20.0 GHz
Insulation Resistance	The insulation resistance shall not be less than 5,000 megohms.
Voltage Standing Wave Ratio (VSWR)	1.06 + .005 * f (GHz)
Contact Resistance	The center contact resistance drop shall not exceed 1.0 milliohms and the outer contact resistance drop shall not exceed 0.2 milliohms.
Dielectric Withstanding Voltage	The magnitude of the test voltage shall be 2,500 volts rms at sea level.
RF High Potential Withstanding Voltage	The RF high potential withstanding voltage is 1,500 volts rms at 5 MHz. Leakage is not applicable.
RF Leakage	- (90 - f (GHz)) dB
Insertion Loss	(.05 SQT(f(GHz))) dB
MECHANICAL	
Connector Durability	TThe connector is to be tested and its mating connector shall be subjected to 500 insertion and withdrawal cycles at 12 cycles per minute max. The connector shall show no evidence of mechanical failure and the connector shall meet the mating characteristic requirements.
Cable Retention Force	75 pounds (333.6 N) min.
Coupling Nut Retention Force	Not applicable for Female connectors. For male connectors, the axial force is 100 lbs (445 N) max.. The torque is 30 inch-pounds (3.4 Nm) max.
Force to Engage and Disengage	The torque required to engage and disengage shall not exceed 6 inch-pounds (0.678 Nm).
Longitudinal Force max.	Longitudinal force is not applicable.
Mating Characteristics	See interface dimensions shown on next page. Applicable to Females only: oversize pin .067 inch (1.7 mm) max. dia. oin; .125 inch (3.2 mm) deep; insertion force 2 lbs. (8.9 N) max. with .066 inch (1.67 mm) min. dia. pin; withdrawal force 1.00 oz (.278 N) min. with .0645 inch (1.64 mm) max. dia. pin.
Recommended Mating Torque	12 - 15 inch-pounds (1.4 - 1.7 Nm)
ENVIRONMENTAL	
Corrosion (Salt Spray)	Specification MIL-STD-202, Method 101, Test Condition B. The salt solution shall be 5%.
Vibration	Specification MIL-STD-202, Method 204, Test Condition B.
Shock	Specification MIL-STD-202, Method 213, Test Condition I.
Thermal Shock	Specification MIL-STD-202, Method 107, Test Condition B, except high temperature shall be +70°C when the regular Bead is used, +170° when the high temperature Bead is used, and +200°C when TFE Fluorocarbon or Borium Nitrite Dielectric are used.
Moisture Resistance	Specification MIL-STD-202, Method 106. Step 7b (vibration) shall be omitted. Insulation resistance shall be 200 megohms min. within 5 minutes of removal from humidity.
Corona Level	The connector shall not exhibit breakdown (corona) when the applied voltage is 500 volts rms and the altitude is 70,000 feet.

K

Dimensions shown are Inches over Millimeters or vice versa. Standard units have stainless finish (last 2 digits of the P/N are -02). Interfaces are per DIN 47 223, DIN 47 226, IEC 169-4, IEC 169-7, IEC 169-8, IEC 457-2, IEC 60169-5, IEEE 287, MIL-PRF-39012, MIL DTL-24044, MIL DTL-3643,MIL-STD-348B, where applicable

Spectrum Elektrotechnik GmbH
Germany
www.spectrum-et.com
sales@spectrum-et.com
Phone: +49 / 89 / 35 48 04 0
Fax: +49 / 89 / 35 48 04 90

Interface Mating Dimensions N (Per MIL-PRF-39012)

N female

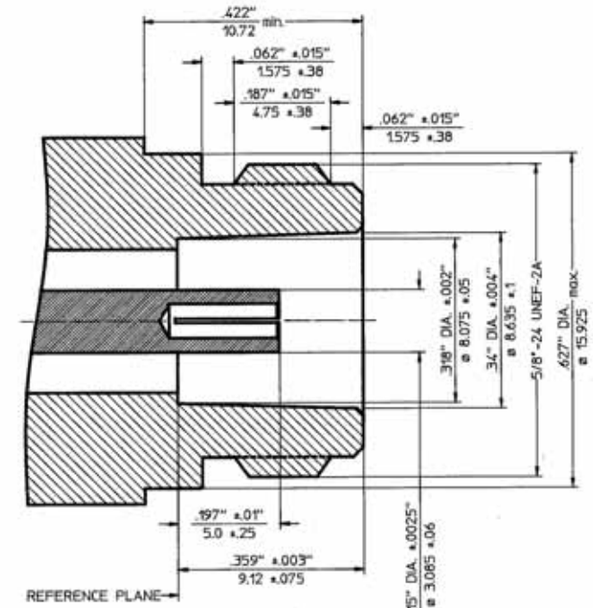

Dimensions shown are inches over Millimeters

Fequency: DC - 18 GHz

N male

Dimensions shown are inches over Millimeters

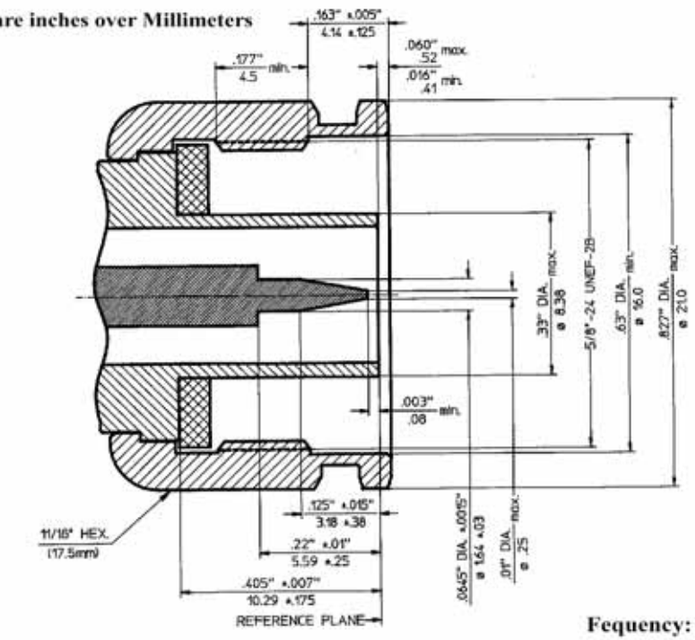

Fequency: DC - 18 GHz

K

Dimensions shown are Inches over Millimeters or vice versa. Standard units have stainless finish (last 2 digits of the P/N are -02). Interfaces are per DIN 47 223, DIN 47 226, IEC 169-4, IEC 169-7, IEC 169-8, IEC 457-2, IEC 60169-5, IEEE 287, MIL-PRF-39012, MIL DTL-24044, MIL DTL-3643,MIL-STD-348B, where applicable

Spectrum Elektrotechnik GmbH
Germany
www.spectrum-et.com
sales@spectrum-et.com
Phone: +49 / 89 / 35 48 04 0
Fax: +49 / 89 / 35 48 04 90

Part - No.	8001-6161-02
Connectors	N-fem. to N-fem.
Frequency	DC - 18.0 GHz
VSWR max.	1.06 + 0.005 x f(GHz)

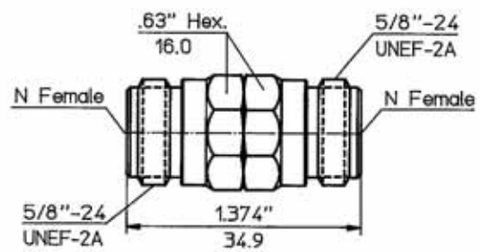

Part - No.	8U01-6161-02
Connectors	N-fem. to N-fem.
Frequency	DC - 18.0 GHz
VSWR max.	1.06 + 0.005 x f(GHz)

Higher Temperature Application

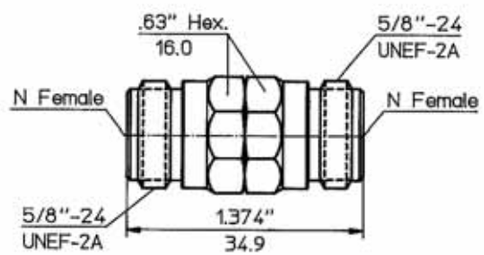

Part - No.	8002-6161-02
Connectors	N-fem. to N-fem.
Frequency	DC - 18.0 GHz
VSWR max.	1.06 + 0.005 x f(GHz)

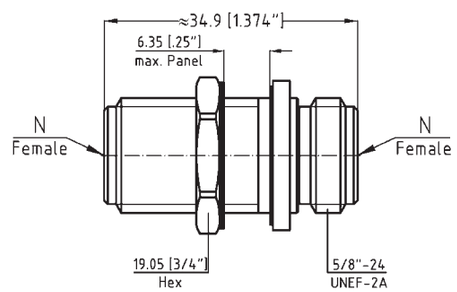

Part - No.	8050-6161-02
Connectors	N-fem. to N-fem.
Frequency	DC - 12.4 GHz
VSWR max.	1.06 + 0.005 x f(GHz)

Higher Power Application

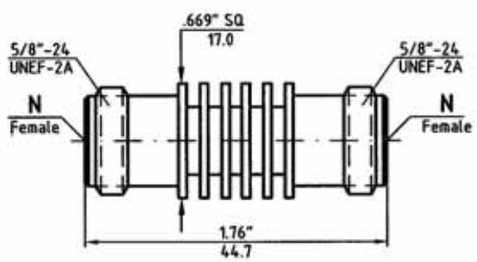

K

Dimensions shown are Inches over Millimeters or vice versa. Standard units have stainless finish (last 2 digits of the P/N are -02). Interfaces are per DIN 47 223, DIN 47 226, IEC 169-4, IEC 169-7, IEC 169-8, IEC 457-2, IEC 60169-5, IEEE 287, MIL-PRF-39012, MIL DTL-24044, MIL DTL-3643,MIL-STD-348B, where applicable

Spectrum Elektrotechnik GmbH
Germany
www.spectrum-et.com
sales@spectrum-et.com
Phone: +49 / 89 / 35 48 04 0
Fax: +49 / 89 / 35 48 04 90

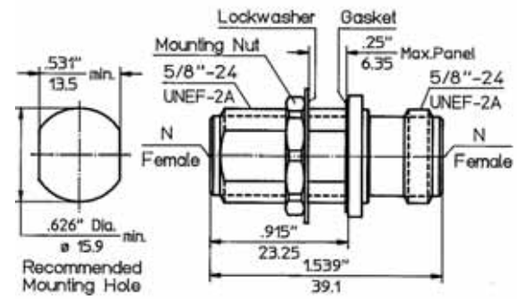

Part - No.	8001-5961-02
Connectors	N-fem. to N-fem.
Frequency	DC - 18.0 GHz
VSWR max.	1.06 + 0.005 x f(GHz)

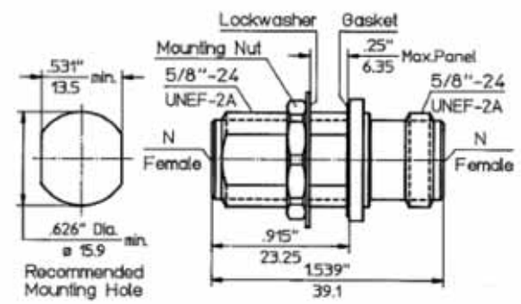

Part - No.	8U01-5961-02
Connectors	N-fem. to N-fem.
Frequency	DC - 18.0 GHz
VSWR max.	1.06 + 0.005 x f(GHz)

Higher Temperature Application

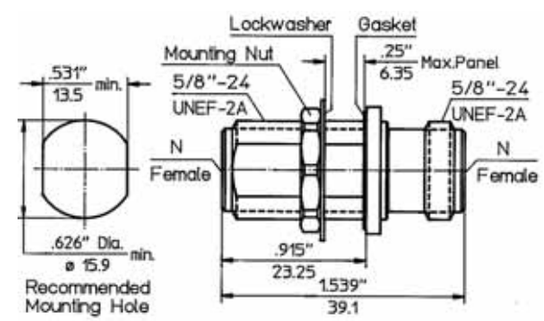

Part - No.	8002-6061-02
Connectors	N-fem. to N-fem.
Frequency	DC - 18.0 GHz
VSWR max.	1.06 + 0.005 x f(GHz)

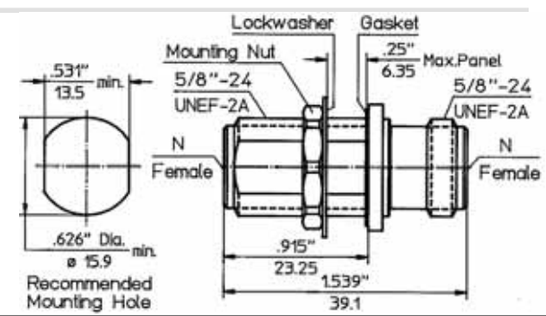

Part - No.	8U02-6061-02
Connectors	N-fem. to N-fem.
Frequency	DC - 18.0 GHz
VSWR max.	1.06 + 0.005 x f(GHz)

Higher Temperature Application

K

Dimensions shown are Inches over Millimeters or vice versa. Standard units have stainless finish (last 2 digits of the P/N are -02). Interfaces are per DIN 47 223, DIN 47 226, IEC 169-4, IEC 169-7, IEC 169-8, IEC 457-2, IEC 60169-5, IEEE 287, MIL-PRF-39012, MIL DTL-24044, MIL DTL-3643,MIL-STD-348B, where applicable

Spectrum Elektrotechnik GmbH
Germany
www.spectrum-et.com
sales@spectrum-et.com
Phone: +49 / 89 / 35 48 04 0
Fax: +49 / 89 / 35 48 04 90

Part - No.	805V-6161-00
Connectors	N-fem. to N-fem.
Frequency	DC - 13.0 GHz
VSWR max.	1.06 + 0.005 x f(GHz)

Higher Power Application

Venting Holes

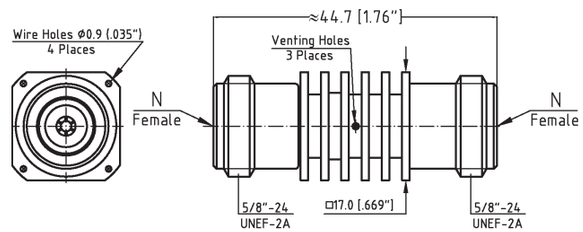

Part - No.	8058-6161-02
Connectors	N-fem. to N-fem.
Frequency	DC - 18.0 GHz
VSWR max.	1.06 + 0.005 x f(GHz)

Higher Power Application

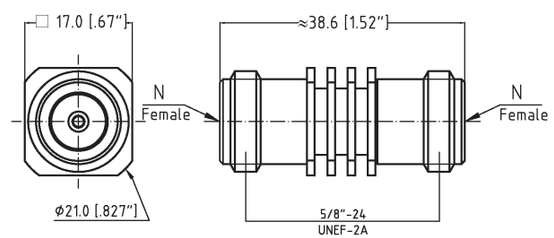

Part - No.	8001-6061-02
Connectors	N-fem. to N-fem.
Frequency	DC - 18.0 GHz
VSWR max.	1.06 + 0.005 x f(GHz)

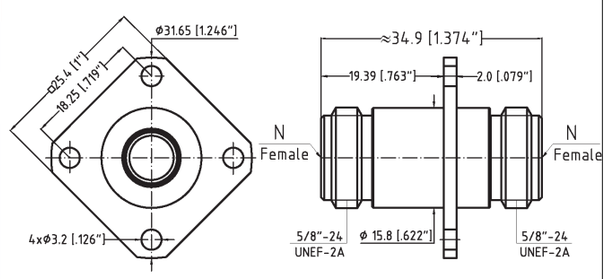

Part - No.	8U01-6061-02
Connectors	N-fem. to N-fem.
Frequency	DC - 18.0 GHz
VSWR max.	1.06 + 0.005 x f(GHz)

Higher Temperature Application

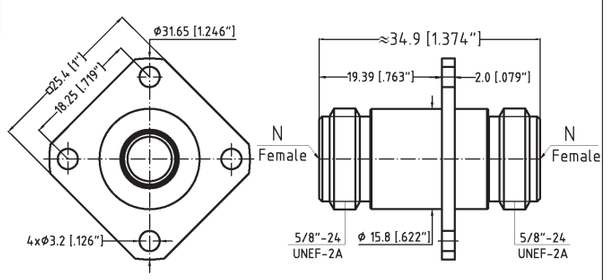

K

Dimensions shown are Inches over Millimeters or vice versa. Standard units have stainless finish (last 2 digits of the P/N are -02). Interfaces are per DIN 47 223, DIN 47 226, IEC 169-4, IEC 169-7, IEC 169-8, IEC 457-2, IEC 60169-5, IEEE 287, MIL-PRF-39012, MIL DTL-24044, MIL DTL-3643,MIL-STD-348B, where applicable

Spectrum Elektrotechnik GmbH
Germany
www.spectrum-et.com
sales@spectrum-et.com
Phone: +49 / 89 / 35 48 04 0
Fax: +49 / 89 / 35 48 04 90

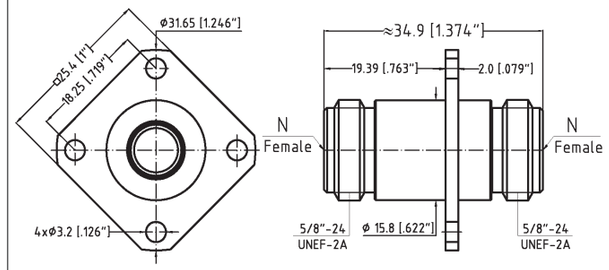

Part - No.	8001-6062-02
Connectors	N-fem. to N-fem.
Frequency	DC - 18.0 GHz
VSWR max.	1.06 + 0.005 x f(GHz)

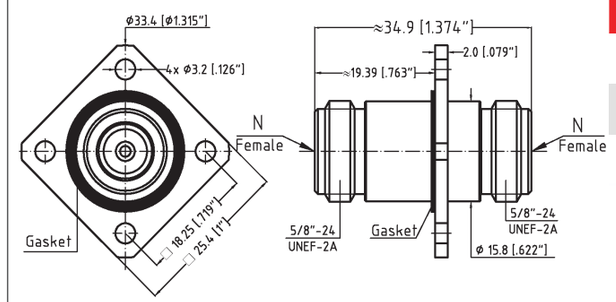

Part - No.	8004-6061-02
Connectors	N-fem. to N-fem.
Frequency	DC - 18.0 GHz
VSWR max.	1.06 + 0.005 x f(GHz)

Unit has gasket

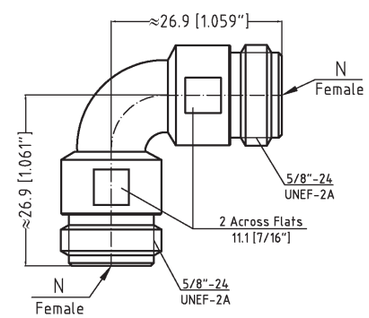

Part - No.	8091-6161-02
Connectors	N-fem. to N-fem.
Frequency	DC - 18.0 GHz
VSWR max.	1.06 + 0.008 x f(GHz)

True radius right angle

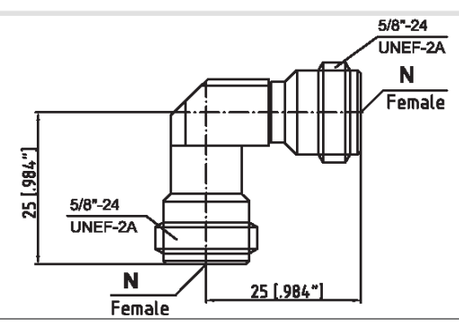

Part - No.	8190-6161-02
Connectors	N-fem. to N-fem.
Frequency	DC - 18.0 GHz
VSWR max.	1.06 + 0.008 x f(GHz)

Mitred right angle

K

Dimensions shown are Inches over Millimeters or vice versa. Standard units have stainless finish (last 2 digits of the P/N are -02). Interfaces are per DIN 47 223, DIN 47 226, IEC 169-4, IEC 169-7, IEC 169-8, IEC 457-2, IEC 60169-5, IEEE 287, MIL-PRF-39012, MIL DTL-24044, MIL DTL-3643,MIL-STD-348B, where applicable

Spectrum Elektrotechnik GmbH
Germany
www.spectrum-et.com
sales@spectrum-et.com
Phone: +49 / 89 / 35 48 04 0
Fax: +49 / 89 / 35 48 04 90

Part - No.	8095-6161-02
Connectors	N-fem. to N-fem.
Frequency	DC - 10.0 GHz
VSWR max.	1.06 + 0.007 x f(GHz)

Higher Power Application

Mitred right angle

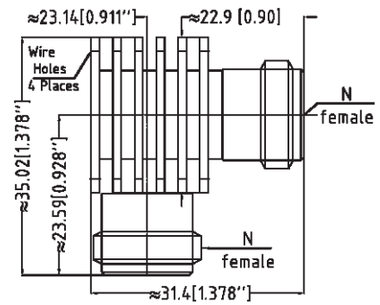

Part - No.	8120-6161-02
Connectors	N-fem. to N-fem.
Frequency	DC - 18.0 GHz
VSWR max.	1.06 + 0.008 x f(GHz)

120° angle

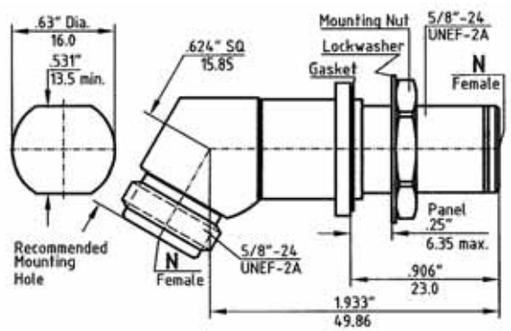

Part - No.	812U-6161-02
Connectors	N-fem. to N-fem.
Frequency	DC - 18.0 GHz
VSWR max.	1.06 + 0.008 x f(GHz)

120° angle

Higher Temperature Application

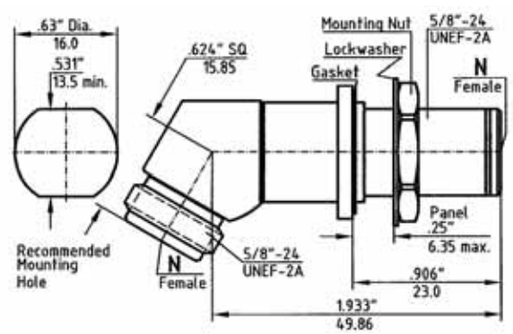

You do not find the Adapter you need for an application? You need technical support? You need price and delivery information? Please contact your nearest Spectrum Representative, or please contact us direct.

Telephone: +49-89-3548-040 Facsimile: +49-89-3548-0490
e-mail: sales@spectrum-et.com www.spectrum-et.com

K

Dimensions shown are Inches over Millimeters or vice versa. Standard units have stainless finish (last 2 digits of the P/N are -02). Interfaces are per DIN 47 223, DIN 47 226, IEC 169-4, IEC 169-7, IEC 169-8, IEC 457-2, IEC 60169-5, IEEE 287, MIL-PRF-39012, MIL DTL-24044, MIL DTL-3643,MIL-STD-348B, where applicable

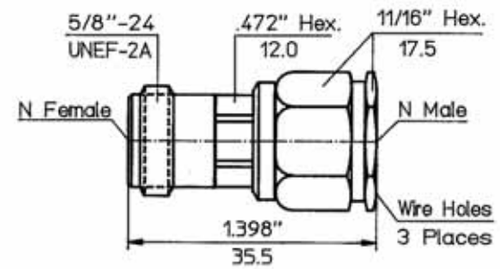

Part - No.	8001-5161-02
Connectors	N-fem. to N-male
Frequency	DC - 18.0 GHz
VSWR max.	1.06 + 0.005 x f(GHz)

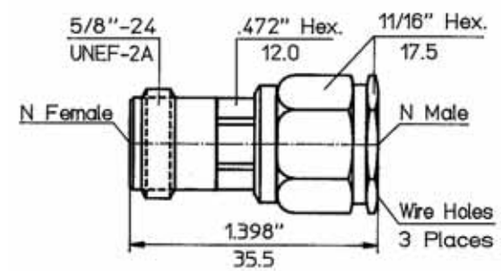

Part - No.	8U01-5161-02
Connectors	N-fem. to N-male
Frequency	DC - 18.0 GHz
VSWR max.	1.06 + 0.005 x f(GHz)

Higher Temperature Application

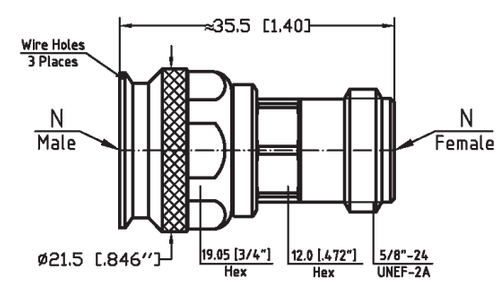

Part - No.	8003-5161-02
Connectors	N-fem. to N-male
Frequency	DC - 18.0 GHz
VSWR max.	1.06 + 0.005 x f(GHz)

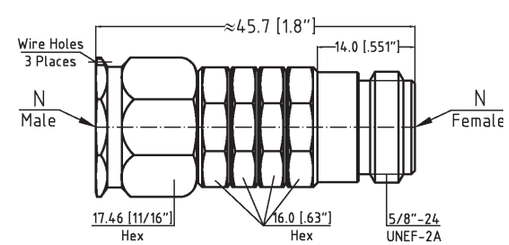

Part - No.	8050-5161-02
Connectors	N-fem. to N-male
Frequency	DC - 12.4 GHz
VSWR max.	1.06 + 0.005 x f(GHz)

Higher Power Application

K

Dimensions shown are Inches over Millimeters or vice versa. Standard units have stainless finish (last 2 digits of the P/N are -02). Interfaces are per DIN 47 223, DIN 47 226, IEC 169-4, IEC 169-7, IEC 169-8, IEC 457-2, IEC 60169-5, IEEE 287, MIL-PRF-39012, MIL DTL-24044, MIL DTL-3643,MIL-STD-348B, where applicable

Part - No.	8051-5161-02
Connectors	N-fem. to N-male
Frequency	DC - 12.4 GHz
VSWR max.	1.06 + 0.005 x f(GHz)

Higher Power Application

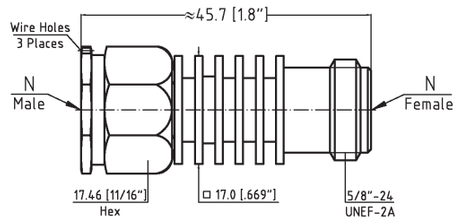

Part - No.	8V51-5161-00
Connectors	N-fem. to N-male
Frequency	DC - 13.0 GHz
VSWR max.	1.06 + 0.005 x f(GHz)

Higher Power Application
Venting Holes

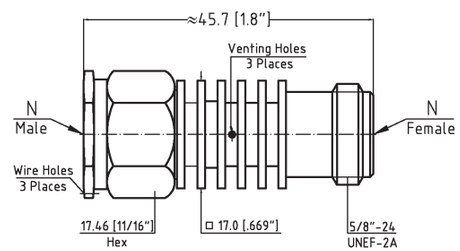

Part - No.	805V-5161-00
Connectors	N-fem. to N-male
Frequency	DC - 13.0 GHz
VSWR max.	1.06 + 0.005 x f(GHz)

Higher Power Application
Venting Holes

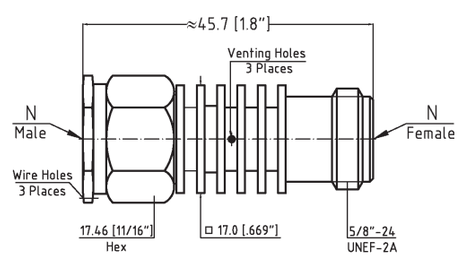

You do not find the Adapter you need for an application? You need technical support? You need price and delivery information? Please contact your nearest Spectrum Representative, or please contact us direct.

Telephone: +49-89-3548-040 Facsimile: +49-89-3548-0490
e-mail: sales@spectrum-et.com www.spectrum-et.com

K

Dimensions shown are Inches over Millimeters or vice versa. Standard units have stainless finish (last 2 digits of the P/N are -02). Interfaces are per DIN 47 223, DIN 47 226, IEC 169-4, IEC 169-7, IEC 169-8, IEC 457-2, IEC 60169-5, IEEE 287, MIL-PRF-39012, MIL DTL-24044, MIL DTL-3643,MIL-STD-348B, where applicable

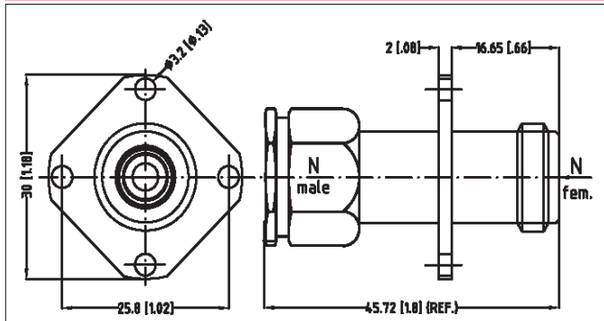

Part - No.	8052-5161-00
Connectors	N-fem. to N-male
Frequency	DC - 12.4 GHz
VSWR max.	1.06 + 0.005 x f(GHz)

Higher Power Application

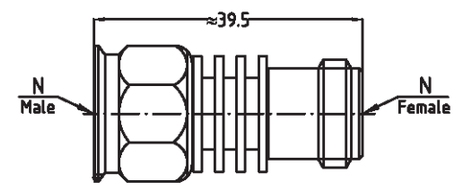

Part - No.	8058-5161-02
Connectors	N-fem. to N-male
Frequency	DC - 18.0 GHz
VSWR max.	1.06 + 0.005 x f(GHz)

Higher Power Application

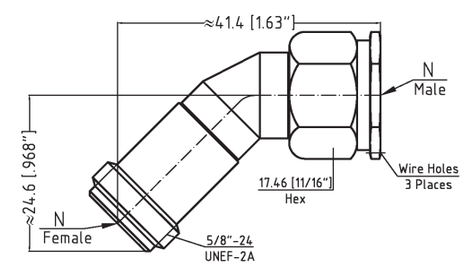

Part - No.	8045-5161-02
Connectors	N-fem. to N-male
Frequency	DC - 18.0 GHz
VSWR max.	1.06 + 0.008 x f(GHz)

135° / (45°)

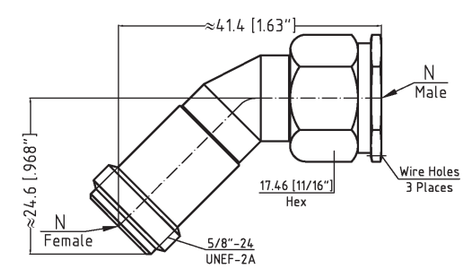

Part - No.	8P45-5161-02
Connectors	N-fem. to N-male
Frequency	DC - 18.0 GHz
VSWR max.	1.06 + 0.005 x f(GHz)

135° / (45°)
Best VSWR

K

Dimensions shown are Inches over Millimeters or vice versa. Standard units have stainless finish (last 2 digits of the P/N are -02). Interfaces are per DIN 47 223, DIN 47 226, IEC 169-4, IEC 169-7, IEC 169-8, IEC 457-2, IEC 60169-5, IEEE 287, MIL-PRF-39012, MIL DTL-24044, MIL DTL-3643,MIL-STD-348B, where applicable

Part - No.	8090-5161-02
Connectors	N-fem. to N-male
Frequency	DC - 18.0 GHz
VSWR max.	1.06 + 0.008 x f(GHz)

Mitred right angle

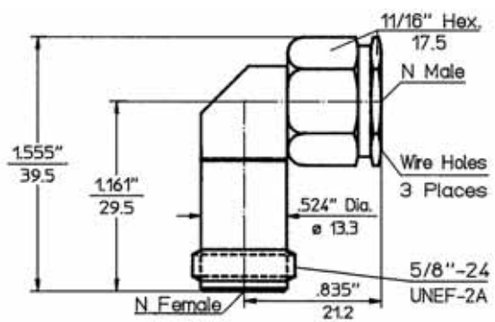

Part - No.	8U90-5161-02
Connectors	N-fem. to N-male
Frequency	DC - 18.0 GHz
VSWR max.	1.06 + 0.008 x f(GHz)

Higher Temperature Application

Mitred right angle

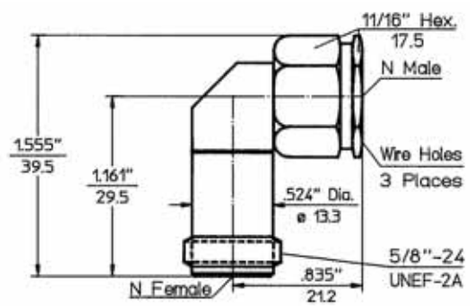

Part - No.	809V-5161-02
Connectors	N-fem. to N-male
Frequency	DC - 18.0 GHz
VSWR max.	1.06 + 0.008 x f(GHz)

Unit hat venting holes

Mitred right angle

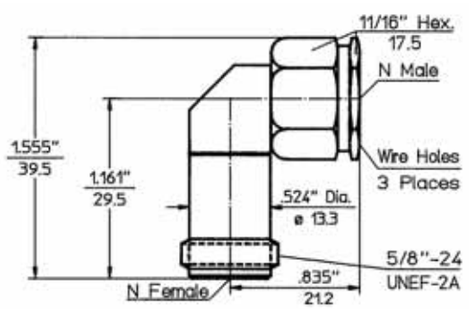

Part - No.	8091-5161-02
Connectors	N-fem. to N-male
Frequency	DC - 18.0 GHz
VSWR max.	1.06 + 0.008 x f(GHz)

True radius right angle

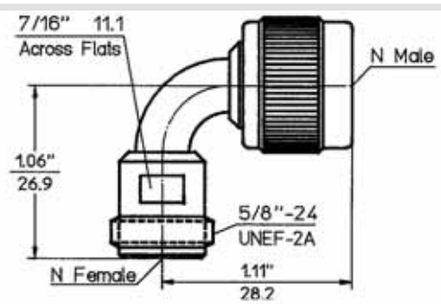

K

Dimensions shown are Inches over Millimeters or vice versa. Standard units have stainless finish (last 2 digits of the P/N are -02). Interfaces are per DIN 47 223, DIN 47 226, IEC 169-4, IEC 169-7, IEC 169-8, IEC 457-2, IEC 60169-5, IEEE 287, MIL-PRF-39012, MIL DTL-24044, MIL DTL-3643,MIL-STD-348B, where applicable

Spectrum Elektrotechnik GmbH
Germany
www.spectrum-et.com
sales@spectrum-et.com
Phone: +49 / 89 / 35 48 04 0
Fax: +49 / 89 / 35 48 04 90

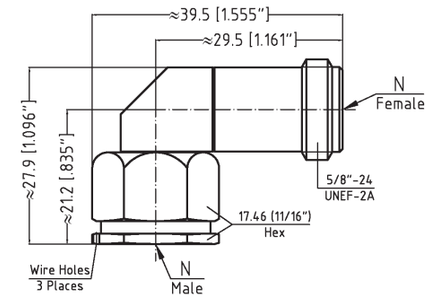

Part - No.	8090-S001-02
Connectors	N-male to N-fem.
Frequency	DC - 18.0 GHz
VSWR max.	1.06 + 0.008 x f(GHz)

Mitred right angle

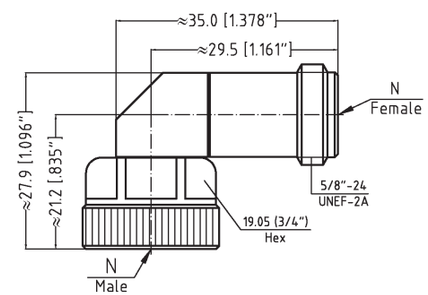

Part - No.	8090-ND61-02
Connectors	N-male to N-fem.
Frequency	DC - 18.0 GHz
VSWR max.	1.06 + 0.008 x f(GHz)

Mitred right angle

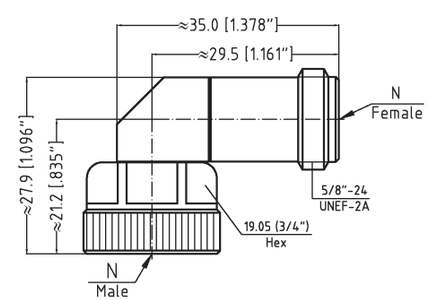

Part - No.	8U90-ND61-02
Connectors	N-male to N-female
Frequency	DC - 18.0 GHz
VSWR max.	1.06 + 0.008 x f(GHz)

Mitred right angle

Higher Temperature Application

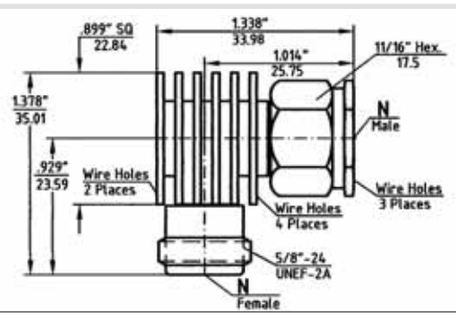

Part - No.	8095-5161-02
Connectors	N-fem. to N-male
Frequency	DC - 10.0 GHz
VSWR max.	1.06 + 0.008 x f(GHz)

Mitred right angle

Higher Power Application

Outer Conductor is stainless steel gold plated, coupling nut is stainless steel passivated

K

Dimensions shown are Inches over Millimeters or vice versa. Standard units have stainless finish (last 2 digits of the P/N are -02). Interfaces are per DIN 47 223, DIN 47 226, IEC 169-4, IEC 169-7, IEC 169-8, IEC 457-2, IEC 60169-5, IEEE 287, MIL-PRF-39012, MIL DTL-24044, MIL DTL-3643,MIL-STD-348B, where applicable

Spectrum Elektrotechnik GmbH
Germany
www.spectrum-et.com
sales@spectrum-et.com
Phone: +49 / 89 / 35 48 04 0
Fax: +49 / 89 / 35 48 04 90

Part - No.	8190-5161-02
Connectors	N-fem. to N-male
Frequency	DC - 18.0 GHz
VSWR max.	1.06 + 0.008 x f(GHz)

Mitred right angle

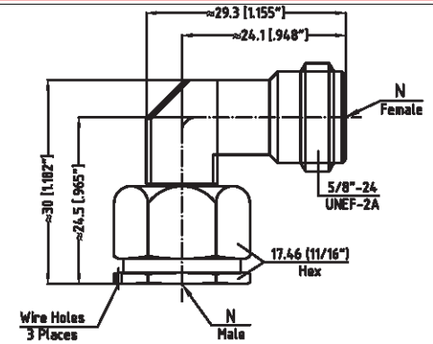

Part - No.	8290-5161-02
Connectors	N-fem. to N-male
Frequency	DC - 18.0 GHz
VSWR max.	1.06 + 0.008 x f(GHz)

Mitred right angle

Difference to 8190-5161-02 is the divergent style of the coupling nut

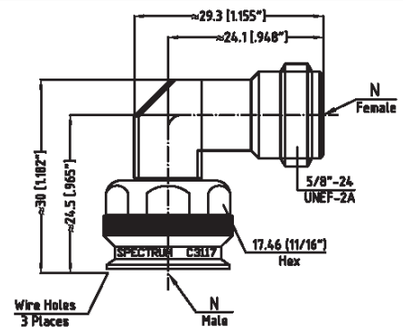

Dimensions shown are Inches over Millimeters or vice versa. Standard units have stainless finish (last 2 digits of the P/N are -02). Interfaces are per DIN 47 223, DIN 47 226, IEC 169-4, IEC 169-7, IEC 169-8, IEC 457-2, IEC 60169-5, IEEE 287, MIL-PRF-39012, MIL DTL-24044, MIL DTL-3643,MIL-STD-348B, where applicable

Spectrum Elektrotechnik GmbH
Germany
www.spectrum-et.com
sales@spectrum-et.com
Phone: +49 / 89 / 35 48 04 0
Fax: +49 / 89 / 35 48 04 90

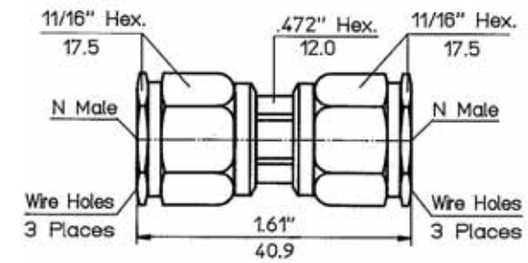

Part - No.	8001-5151-02
Connectors	N-male to N-male
Frequency	DC - 18.0 GHz
VSWR max.	1.06 + 0.005 x f(GHz)

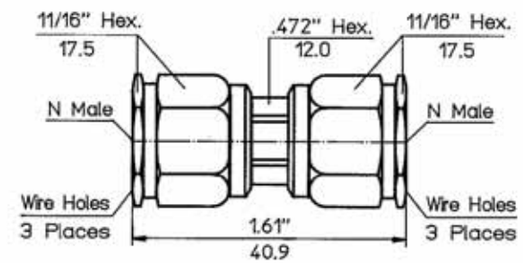

Part - No.	8U01-5151-02
Connectors	N-male to N-male
Frequency	DC - 18.0 GHz
VSWR max.	1.06 + 0.005 x f(GHz)

Higher Temperature Application

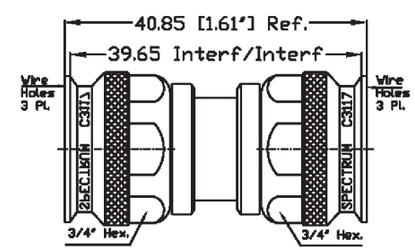

Part - No.	8002-5151-02
Connectors	N-male to N-male
Frequency	DC - 18.0 GHz
VSWR max.	1.06 + 0.005 x f(GHz)

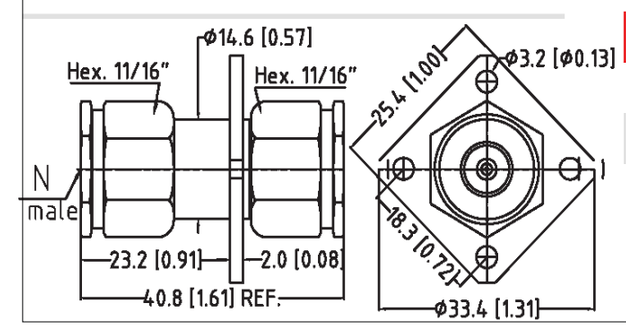

Part - No.	8003-5151-02
Connectors	N-male to N-male
Frequency	DC - 18.0 GHz
VSWR max.	1.06 + 0.005 x f(GHz)

Dimensions shown are Inches over Millimeters or vice versa. Standard units have stainless finish (last 2 digits of the P/N are -02). Interfaces are per DIN 47 223, DIN 47 226, IEC 169-4, IEC 169-7, IEC 169-8, IEC 457-2, IEC 60169-5, IEEE 287, MIL-PRF-39012, MIL DTL-24044, MIL DTL-3643,MIL-STD-348B, where applicable

Spectrum Elektrotechnik GmbH
Germany
www.spectrum-et.com
sales@spectrum-et.com
Phone: +49 / 89 / 35 48 04 0
Fax: +49 / 89 / 35 48 04 90

Part - No.	8091-5151-02
Connectors	N-male to N-male
Frequency	DC - 18.0 GHz
VSWR max.	1.06 + 0.008 x f(GHz)

True radius right angle

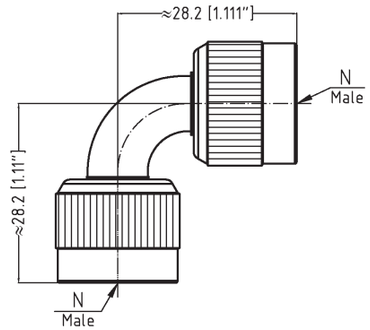

Part - No.	8190-5151-02
Connectors	N-male to N-male
Frequency	DC - 18.0 GHz
VSWR max.	1.06 + 0.008 x f(GHz)

Mitred right angle

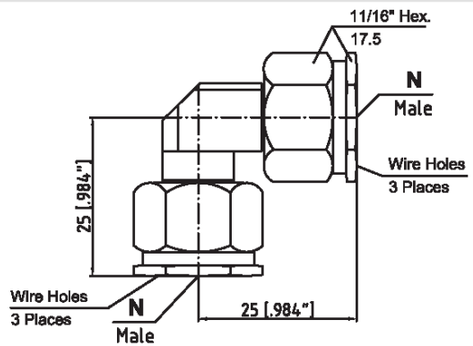

Part - No.	8290-5151-02
Connectors	N-male to N-male
Frequency	DC - 18.0 GHz
VSWR max.	1.06 + 0.008 x f(GHz)

Mitred right angle

Only differences between 8190-... and 8290-... are the coupling nuts

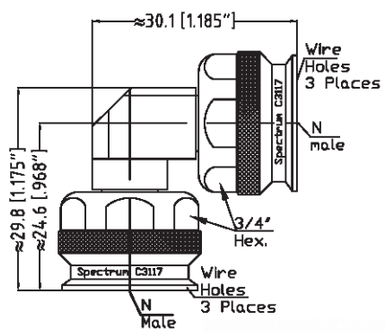

You do not find the Adapter you need for an application? You need technical support? You need price and delivery information? Please contact your nearest Spectrum Representative, or please contact us direct.

Telephone: +49-89-3548-040 Facsimile: +49-89-3548-0490
e-mail: sales@spectrum-et.com www.spectrum-et.com

K

Dimensions shown are Inches over Millimeters or vice versa. Standard units have stainless finish (last 2 digits of the P/N are -02). Interfaces are per DIN 47 223, DIN 47 226, IEC 169-4, IEC 169-7, IEC 169-8, IEC 457-2, IEC 60169-5, IEEE 287, MIL-PRF-39012, MIL DTL-24044, MIL DTL-3643,MIL-STD-348B, where applicable

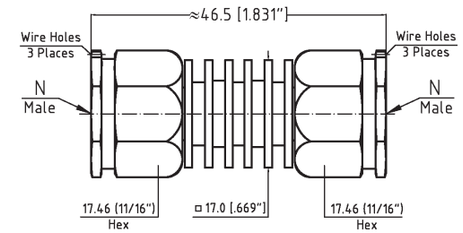

Part - No.	8050-5151-02
Connectors	N-male to N-male
Frequency	DC - 12.4 GHz
VSWR max.	1.06 + 0.005 x f(GHz)

Higher Power Application

Outer Conductor is stainless steel gold plated coupling nut is stainless steel passivated

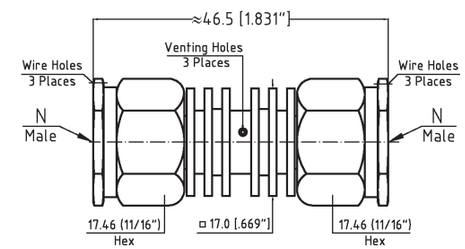

Part - No.	805V-5151-00
Connectors	N-male to N-male
Frequency	DC - 13.0 GHz
VSWR max.	1.06 + 0.005 x f(GHz)

Venting Holes
Higher Power Application

Outer Conductor is stainless steel gold plated coupling nut is stainless steel passivated

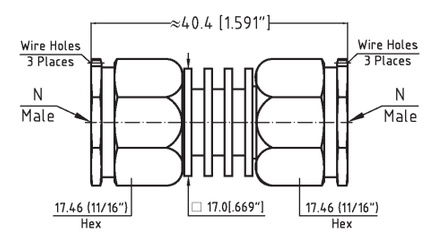

Part - No.	8058-5151-02
Connectors	N-male to N-male
Frequency	DC - 18.0 GHz
VSWR max.	1.06 + 0.005 x f(GHz)

Higher Power Application

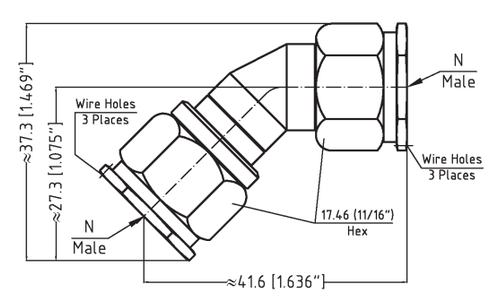

Part - No.	8045-5151-02
Connectors	N-male to N-male
Frequency	DC - 18.0 GHz
VSWR max.	1.06 + 0.008 x f(GHz)

135° / (45°)

K

Dimensions shown are Inches over Millimeters or vice versa. Standard units have stainless finish (last 2 digits of the P/N are -02). Interfaces are per DIN 47 223, DIN 47 226, IEC 169-4, IEC 169-7, IEC 169-8, IEC 457-2, IEC 60169-5, IEEE 287, MIL-PRF-39012, MIL DTL-24044, MIL DTL-3643,MIL-STD-348B, where applicable

Part - No.	8801-6161-02
Connectors	**N-female to N-female**
Frequency	DC - 18.0 GHz
VSWR max.	1.06 + 0.005 x f(GHz)

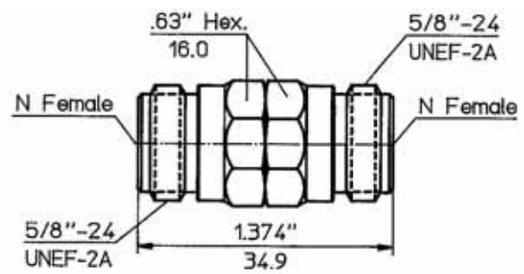

Part - No.	8801-5161-02
Connectors	**N-male to N-fem.**
Frequency	DC - 18.0 GHz
VSWR max.	1.06 + 0.005 x f(GHz)

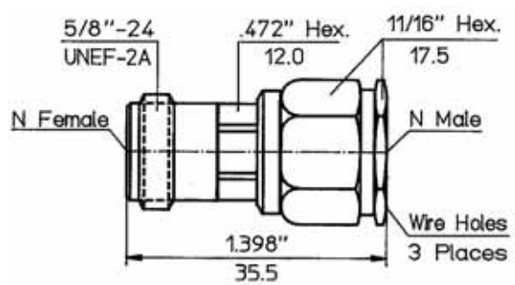

Part - No.	8801-5151-02
Connectors	**N-male to N-male**
Frequency	DC - 18.0 GHz
VSWR max.	1.06 + 0.005 x f(GHz)

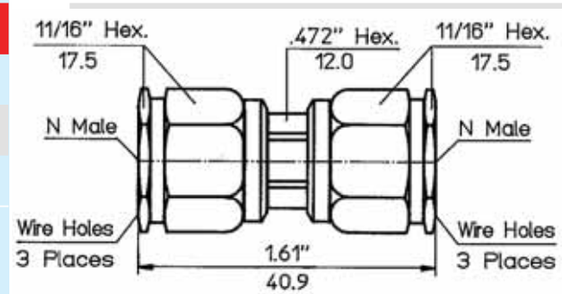

You do not find the Adapter you need for an application? You need technical support? You need price and delivery information? Please contact your nearest Spectrum Representative, or please contact us direct.

Telephone: +49-89-3548-040 Facsimile: +49-89-3548-0490
e-mail: sales@spectrum-et.com www.spectrum-et.com

K

Dimensions shown are Inches over Millimeters or vice versa. Standard units have stainless finish (last 2 digits of the P/N are -02). Interfaces are per DIN 47 223, DIN 47 226, IEC 169-4, IEC 169-7, IEC 169-8, IEC 457-2, IEC 60169-5, IEEE 287, MIL-PRF-39012, MIL DTL-24044, MIL DTL-3643,MIL-STD-348B, where applicable

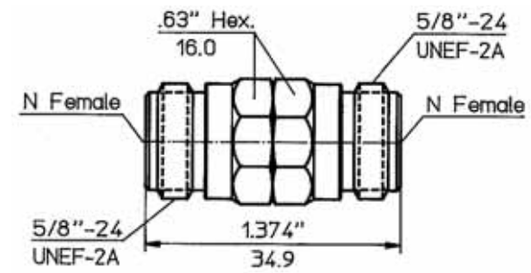

Part - No.	88U1-6161-02
Connectors	**N-female to N-female**
Frequency	DC - 18.0 GHz
VSWR max.	1.06 + 0.005 x f(GHz)

Higher Temperature Application

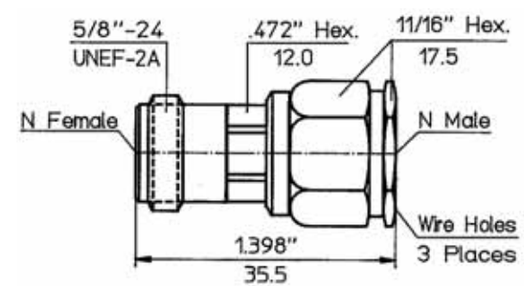

Part - No.	88U1-5161-02
Connectors	**N-male to N-female**
Frequency	DC - 18.0 GHz
VSWR max.	1.06 + 0.005 x f(GHz)

Higher Temperature Application

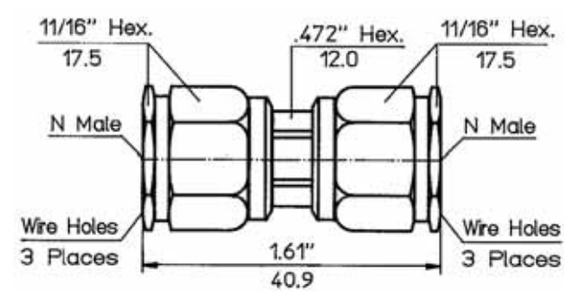

Part - No.	88U1-5151-02
Connectors	**N-male to N-male**
Frequency	DC - 18.0 GHz
VSWR max.	1.06 + 0.005 x f(GHz)

Higher Temperature Application

You do not find the Adapter you need for an application? You need technical support? You need price and delivery information? Please contact your nearest Spectrum Representative, or please contact us direct.

Telephone: +49-89-3548-040 Facsimile: +49-89-3548-0490
e-mail: sales@spectrum-et.com www.spectrum-et.com

K

Dimensions shown are Inches over Millimeters or vice versa. Standard units have stainless finish (last 2 digits of the P/N are -02). Interfaces are per DIN 47 223, DIN 47 226, IEC 169-4, IEC 169-7, IEC 169-8, IEC 457-2, IEC 60169-5, IEEE 287, MIL-PRF-39012, MIL DTL-24044, MIL DTL-3643,MIL-STD-348B, where applicable

Part - No.	8001-HF61-02
Connectors	N-fem. to 2.4mm-fem.
Frequency	DC - 18.0 GHz
VSWR max.	1.06 + 0.005 x f(GHz)

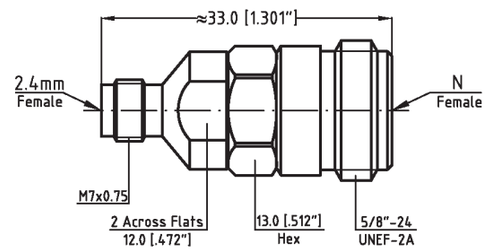

Part - No.	8U01-HF61-02
Connectors	N-fem. to 2.4mm-fem.
Frequency	DC - 18.0 GHz
VSWR max.	1.06 + 0.005 x f(GHz)

Higher Temperature Application

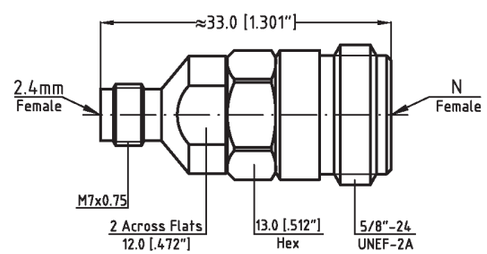

Part - No.	8001-HM61-02
Connectors	N-fem. to 2.4mm-male
Frequency	DC - 18.0 GHz
VSWR max.	1.06 + 0.005 x f(GHz)

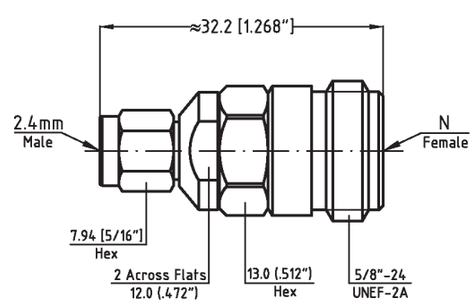

Part - No.	8U01-HM61-02
Connectors	N-fem. to 2.4mm-male
Frequency	DC - 18.0 GHz
VSWR max.	1.06 + 0.005 x f(GHz)

Higher Temperature Application

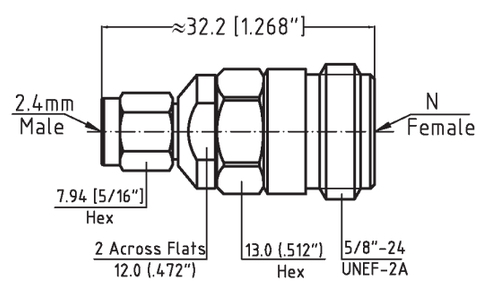

K

Dimensions shown are Inches over Millimeters or vice versa. Standard units have stainless finish (last 2 digits of the P/N are -02). Interfaces are per DIN 47 223, DIN 47 226, IEC 169-4, IEC 169-7, IEC 169-8, IEC 457-2, IEC 60169-5, IEEE 287, MIL-PRF-39012, MIL DTL-24044, MIL DTL-3643,MIL-STD-348B, where applicable

Spectrum Elektrotechnik GmbH
Germany
www.spectrum-et.com
sales@spectrum-et.com
Phone: +49 / 89 / 35 48 04 0
Fax: +49 / 89 / 35 48 04 90

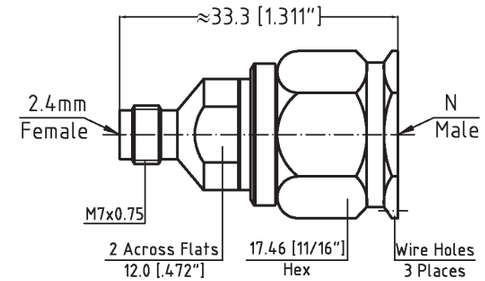

Part - No.	8001-HF51-02
Connectors	N-male to 2.4mm-fem.
Frequency	DC - 18.0 GHz
VSWR max.	1.06 + 0.005 x f(GHz)

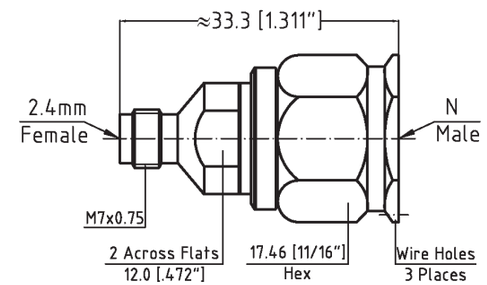

Part - No.	8U01-HF51-02
Connectors	N-male to 2.4mm-fem.
Frequency	DC - 18.0 GHz
VSWR max.	1.06 + 0.005 x f(GHz)

Higher Temperature Application

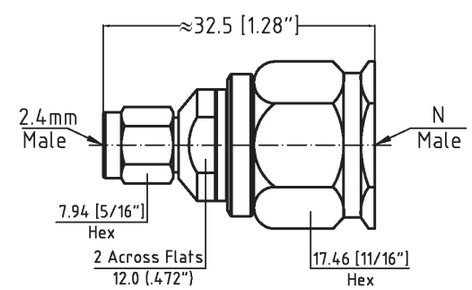

Part - No.	8001-HM51-02
Connectors	N-male to 2.4mm-male
Frequency	DC - 18.0 GHz
VSWR max.	1.06 + 0.005 x f(GHz)

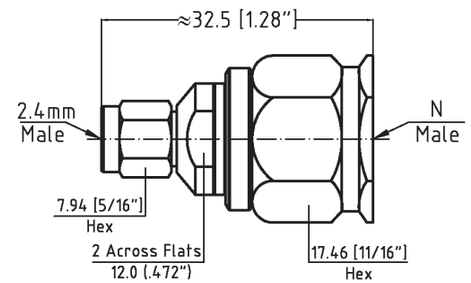

Part - No.	8U01-HM51-02
Connectors	N-male to 2.4mm-male
Frequency	DC - 18.0 GHz
VSWR max.	1.06 + 0.005 x f(GHz)

Higher Temperature Application

K

Dimensions shown are Inches over Millimeters or vice versa. Standard units have stainless finish (last 2 digits of the P/N are -02). Interfaces are per DIN 47 223, DIN 47 226, IEC 169-4, IEC 169-7, IEC 169-8, IEC 457-2, IEC 60169-5, IEEE 287, MIL-PRF-39012, MIL DTL-24044, MIL DTL-3643,MIL-STD-348B, where applicable

Spectrum Elektrotechnik GmbH
Germany
www.spectrum-et.com
sales@spectrum-et.com
Phone: +49 / 89 / 35 48 04 0
Fax: +49 / 89 / 35 48 04 90

Part - No.	8001-KF61-02
Connectors	N-fem. to 2.92 mm-fem.
Frequency	DC - 18.0 GHz
VSWR max.	1.06 + 0.005 x f(GHz)

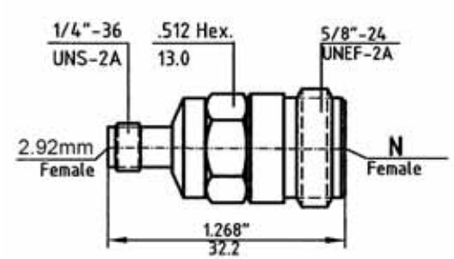

Part - No.	8U01-KF61-02
Connectors	N-fem. to 2.92 mm-fem.
Frequency	DC - 18.0 GHz
VSWR max.	1.06 + 0.005 x f(GHz)

Higher Temperature Application

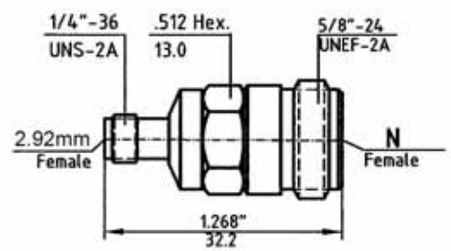

Part - No.	8001-KM61-02
Connectors	N-fem. to 2.92 mm-male
Frequency	DC - 18.0 GHz
VSWR max.	1.06+ 0.005 x f(GHz)

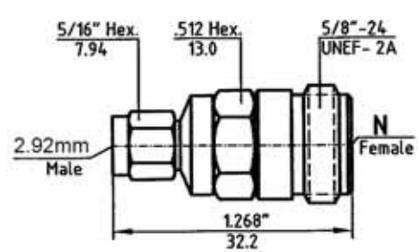

Part - No.	8001-KF51-02
Connectors	N-male to 2.92 mm-fem.
Frequency	DC - 18.0 GHz
VSWR max.	1.06 + 0.005 x f(GHz)

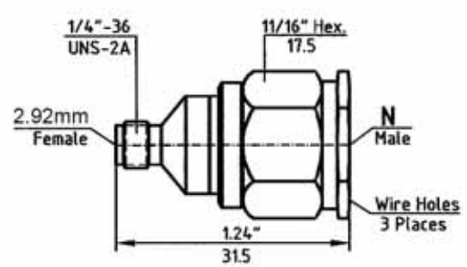

Dimensions shown are Inches over Millimeters or vice versa. Standard units have stainless finish (last 2 digits of the P/N are -02). Interfaces are per DIN 47 223, DIN 47 226, IEC 169-4, IEC 169-7, IEC 169-8, IEC 457-2, IEC 60169-5, IEEE 287, MIL-PRF-39012, MIL DTL-24044, MIL DTL-3643,MIL-STD-348B, where applicable

Spectrum Elektrotechnik GmbH
Germany
www.spectrum-et.com
sales@spectrum-et.com
Phone: +49 / 89 / 35 48 04 0
Fax: +49 / 89 / 35 48 04 90

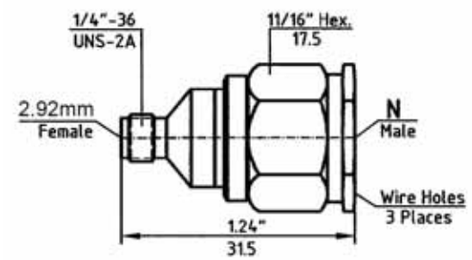

Part - No.	8U01-KF51-02
Connectors	N-male to 2.92 mm-fem.
Frequency	DC - 18.0 GHz
VSWR max.	1.06 + 0.005 x f(GHz)

Higher Temperature Application

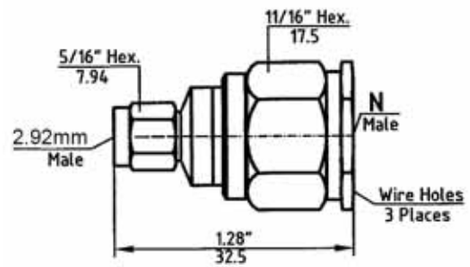

Part - No.	8001-KM51-02
Connectors	N-male to 2.92 mm-male
Frequency	DC - 18.0 GHz
VSWR max.	1.06 + 0.005 x f(GHz)

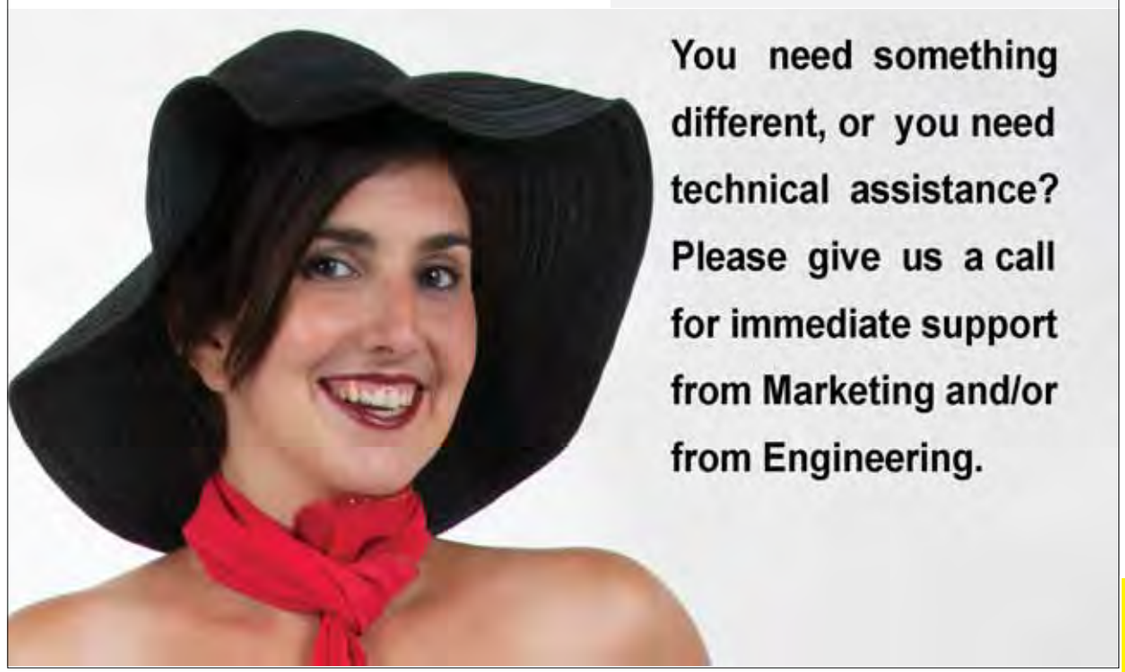

Dimensions shown are Inches over Millimeters or vice versa. Standard units have stainless finish (last 2 digits of the P/N are -02). Interfaces are per DIN 47 223, DIN 47 226, IEC 169-4, IEC 169-7, IEC 169-8, IEC 457-2, IEC 60169-5, IEEE 287, MIL-PRF-39012, MIL DTL-24044, MIL DTL-3643,MIL-STD-348B, where applicable

Spectrum Elektrotechnik GmbH
Germany
www.spectrum-et.com
sales@spectrum-et.com
Phone: +49 / 89 / 35 48 04 0
Fax: +49 / 89 / 35 48 04 90

Part - No.	8002-6192-02
Connectors	N-fem. to 3.5 mm-fem.
Frequency	DC - 18.0 GHz
VSWR max.	1.06 + 0.005 x f(GHz)

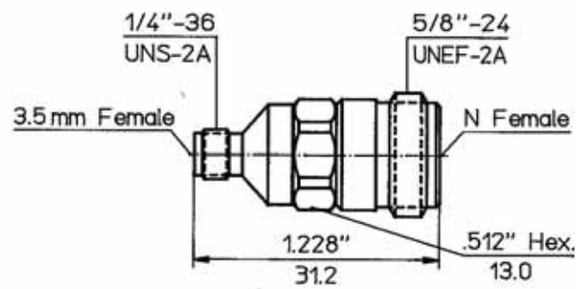

Part - No.	8U02-6192-02
Connectors	N-fem. to 3.5 mm-fem.
Frequency	DC - 18.0 GHz
VSWR max.	1.06 + 0.005 x f(GHz)

Higher Temperature Application

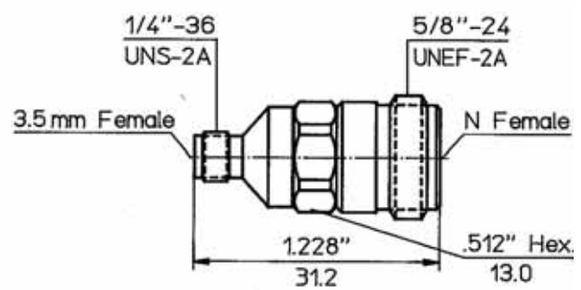

Part - No.	8003-6192-02
Connectors	N-fem. to 3.5 mm-fem.
Frequency	DC - 18.0 GHz
VSWR max.	1.06 + 0.005 x f(GHz)

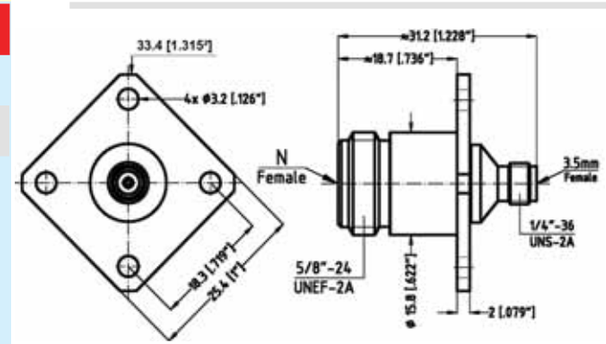

Part - No.	8U03-6192-02
Connectors	N-fem. to 3.5 mm-fem.
Frequency	DC - 18.0 GHz
VSWR max.	1.06 + 0.005 x f(GHz)

Higher Temperature Application

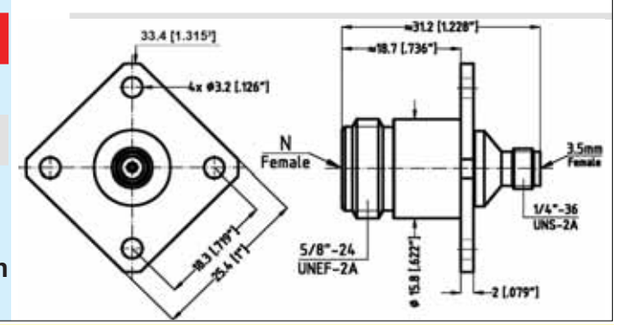

K

Dimensions shown are Inches over Millimeters or vice versa. Standard units have stainless finish (last 2 digits of the P/N are -02). Interfaces are per DIN 47 223, DIN 47 226, IEC 169-4, IEC 169-7, IEC 169-8, IEC 457-2, IEC 60169-5, IEEE 287, MIL-PRF-39012, MIL DTL-24044, MIL DTL-3643,MIL-STD-348B, where applicable

Spectrum Elektrotechnik GmbH
Germany
www.spectrum-et.com
sales@spectrum-et.com
Phone: +49 / 89 / 35 48 04 0
Fax: +49 / 89 / 35 48 04 90

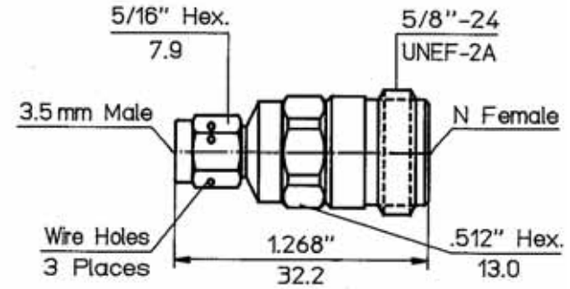

Part - No.	8002-6191-02
Connectors	N-fem. to 3.5 mm-male
Frequency	DC - 18.0 GHz
VSWR max.	1.06 + 0.005 x f(GHz)

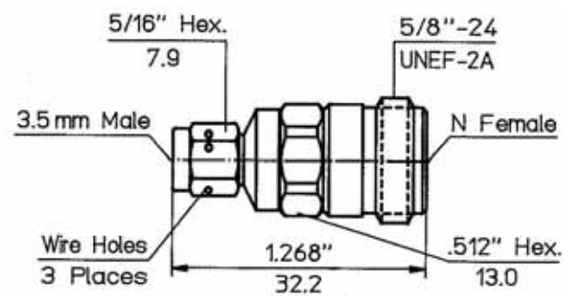

Part - No.	8U02-6191-02
Connectors	N-fem. to 3.5 mm-male
Frequency	DC - 18.0 GHz
VSWR max.	1.06 + 0.005 x f(GHz)

Higher Temperature Application

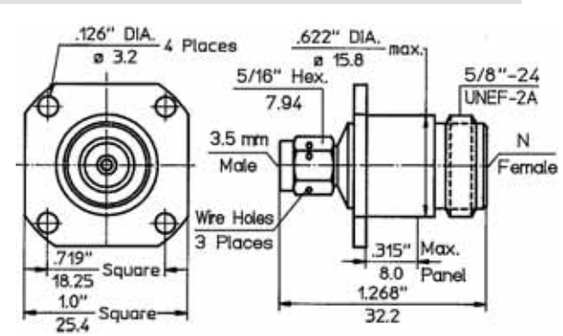

Part - No.	8003-6191-02
Connectors	N-fem. to 3.5 mm-male
Frequency	DC - 18.0 GHz
VSWR max.	1.06 + 0.005 x f(GHz)

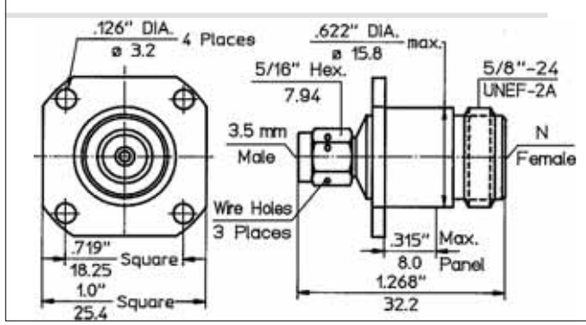

Part - No.	8U03-6191-02
Connectors	N-fem. to 3.5 mm-male.
Frequency	DC - 18.0 GHz
VSWR max.	1.06 + 0.005 x f(GHz)

Higher Temperature Application

K

Dimensions shown are Inches over Millimeters or vice versa. Standard units have stainless finish (last 2 digits of the P/N are -02). Interfaces are per DIN 47 223, DIN 47 226, IEC 169-4, IEC 169-7, IEC 169-8, IEC 457-2, IEC 60169-5, IEEE 287, MIL-PRF-39012, MIL DTL-24044, MIL DTL-3643,MIL-STD-348B, where applicable

Spectrum Elektrotechnik GmbH
Germany
www.spectrum-et.com
sales@spectrum-et.com
Phone: +49 / 89 / 35 48 04 0
Fax: +49 / 89 / 35 48 04 90

Part - No.	8002-5192-02
Connectors	N-male to 3.5 mm-fem.
Frequency	DC - 18.0 GHz
VSWR max.	1.06 + 0.005 x f(GHz)

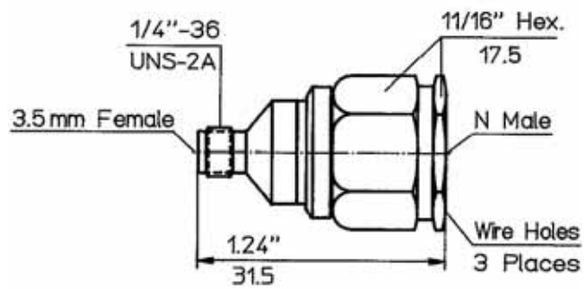

Part - No.	8U02-5192-02
Connectors	N-male to 3.5 mm-fem.
Frequency	DC - 18.0 GHz
VSWR max.	1.06 + 0.005 x f(GHz)
	Higher Temperature Application

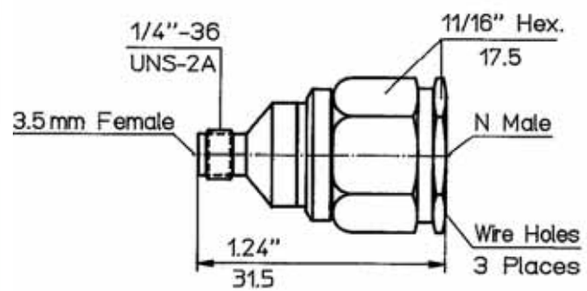

Part - No.	8002-5191-02
Connectors	3.5 mm-male to N-male
Frequency	DC - 18.0 GHz
VSWR max.	1.06 + 0.005 x f(GHz)

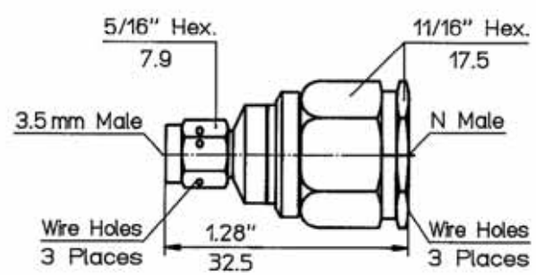

Part - No.	8U02-5191-02
Connectors	3.5 mm-male to N-male
Frequency	DC - 18.0 GHz
VSWR max.	1.06 + 0.005 x f(GHz)
	Higher Temperature Application

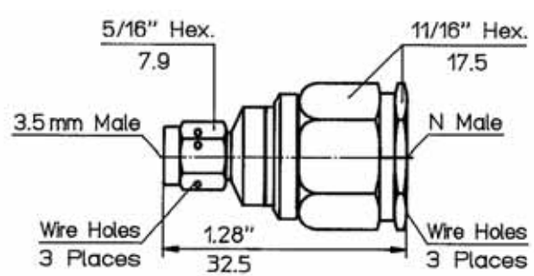

Dimensions shown are Inches over Millimeters or vice versa. Standard units have stainless finish (last 2 digits of the P/N are -02). Interfaces are per DIN 47 223, DIN 47 226, IEC 169-4, IEC 169-7, IEC 169-8, IEC 457-2, IEC 60169-5, IEEE 287, MIL-PRF-39012, MIL DTL-24044, MIL DTL-3643,MIL-STD-348B, where applicable

Spectrum Elektrotechnik GmbH
Germany
www.spectrum-et.com
sales@spectrum-et.com
Phone: +49 / 89 / 35 48 04 0
Fax: +49 / 89 / 35 48 04 90

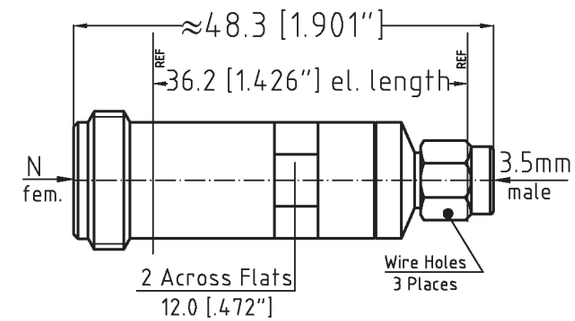

Part - No.	8801-6191-02
Connectors	N-fem. to 3.5 mm-male
Frequency	DC - 18.0 GHz
VSWR max.	1.06+ 0.005 x f(GHz)

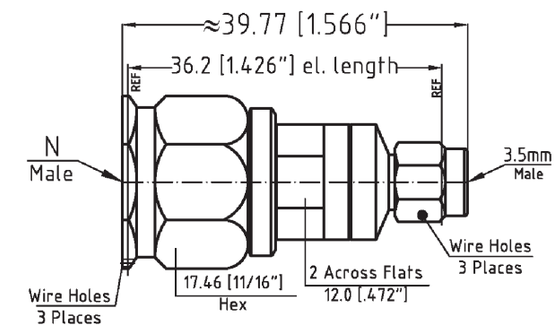

Part - No.	8801-5191-02
Connectors	N-male to 3.5 mm-male
Frequency	DC - 18.0 GHz
VSWR max.	1.06 + 0.005 x f(GHz)

Dimensions shown are Inches over Millimeters or vice versa. Standard units have stainless finish (last 2 digits of the P/N are -02). Interfaces are per DIN 47 223, DIN 47 226, IEC 169-4, IEC 169-7, IEC 169-8, IEC 457-2, IEC 60169-5, IEEE 287, MIL-PRF-39012, MIL DTL-24044, MIL DTL-3643,MIL-STD-348B, where applicable

Spectrum Elektrotechnik GmbH
Germany
www.spectrum-et.com
sales@spectrum-et.com
Phone: +49 / 89 / 35 48 04 0
Fax: +49 / 89 / 35 48 04 90

Part - No.	8001-6171-02
Connectors	N-fem. to BNC-male
Frequency	DC - 10.0 GHz
VSWR max.	1.06 + 0.008 x f(GHz)

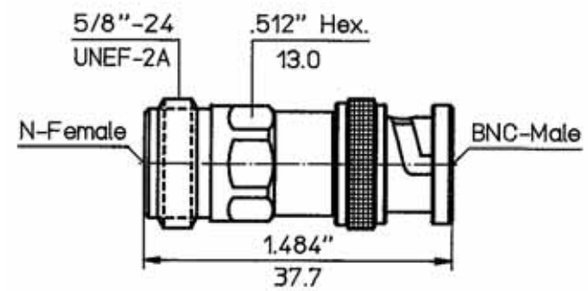

Part - No.	8U01-6171-02
Connectors	N-fem. to BNC-male
Frequency	DC - 10.0 GHz
VSWR max.	1.06 + 0.008 x f(GHz)

Higher Temperature applications

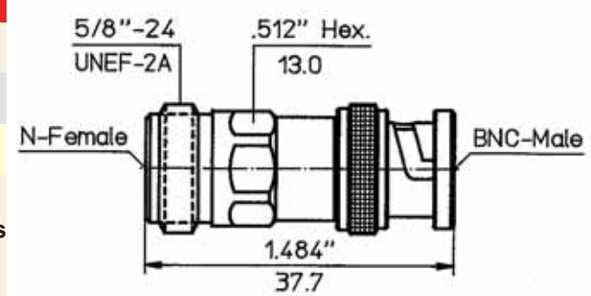

Part - No.	8001-5181-02
Connectors	N-male to BNC-fem.
Frequency	DC - 10.0 GHz
VSWR max.	1.06 + 0.008 x f(GHz)

8U01-5181-02 for higher temp. applications

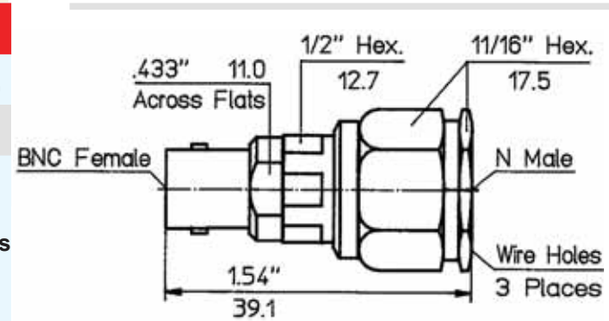

Part - No.	800V-5181-02
Connectors	N-male to BNC-fem.
Frequency	DC - 10.0 GHz
VSWR max.	1.06 + 0.008 x f(GHz)

Unit has venting holes

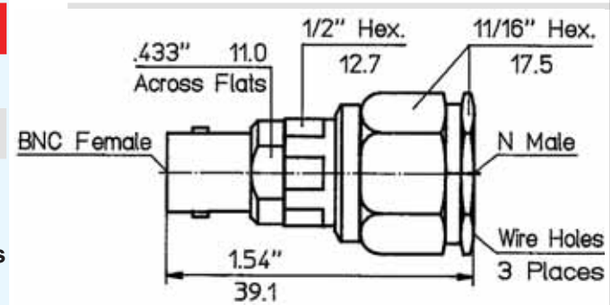

K

Dimensions shown are Inches over Millimeters or vice versa. Standard units have stainless finish (last 2 digits of the P/N are -02). Interfaces are per DIN 47 223, DIN 47 226, IEC 169-4, IEC 169-7, IEC 169-8, IEC 457-2, IEC 60169-5, IEEE 287, MIL-PRF-39012, MIL DTL-24044, MIL DTL-3643,MIL-STD-348B, where applicable

Spectrum Elektrotechnik GmbH
Germany
www.spectrum-et.com
sales@spectrum-et.com
Phone: +49 / 89 / 35 48 04 0
Fax: +49 / 89 / 35 48 04 90

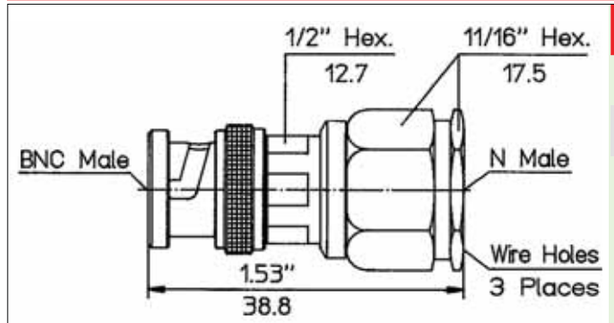

Part - No.	8001-5171-02
Connectors	N-male to BNC-male
Frequency	DC - 10.0 GHz
VSWR max.	1.06 + 0.008 x f(GHz)

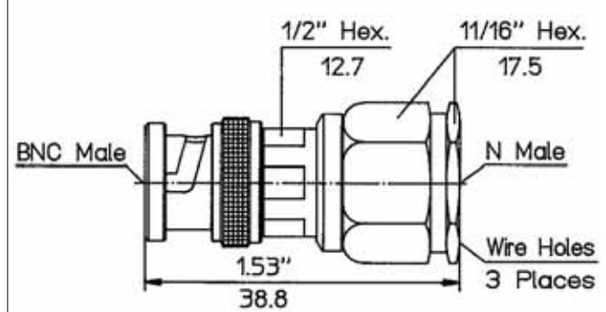

Part - No.	8U01-5171-02
Connectors	N-male to BNC-male
Frequency	DC - 10.0 GHz
VSWR max.	1.06 + 0.008 x f(GHz)

Higher Temperature applications

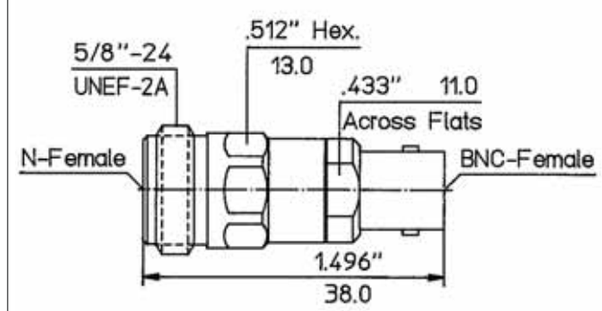

Part - No.	8001-6181-02
Connectors	N-fem. to BNC-fem.
Frequency	DC - 10.0 GHz
VSWR max.	1.06 + 0.008 x f(GHz)

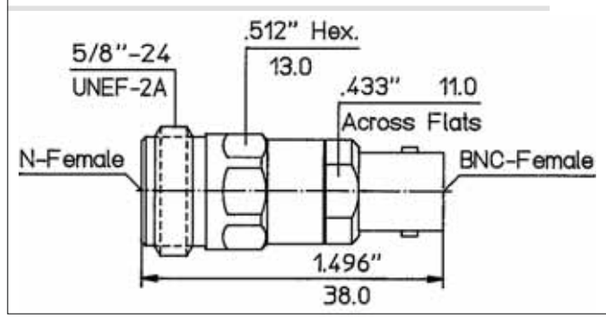

Part - No.	8U01-6181-02
Connectors	N-fem. to BNC-fem.
Frequency	DC - 10.0 GHz
VSWR max.	1.06 + 0.008 x f(GHz)

Higher Temperature applications

K

Dimensions shown are Inches over Millimeters or vice versa. Standard units have stainless finish (last 2 digits of the P/N are -02). Interfaces are per DIN 47 223, DIN 47 226, IEC 169-4, IEC 169-7, IEC 169-8, IEC 457-2, IEC 60169-5, IEEE 287, MIL-PRF-39012, MIL DTL-24044, MIL DTL-3643,MIL-STD-348B, where applicable

Spectrum Elektrotechnik GmbH
Germany
www.spectrum-et.com
sales@spectrum-et.com
Phone: +49 / 89 / 35 48 04 0
Fax: +49 / 89 / 35 48 04 90

Part - No.	8001-2161-02
Connectors	N-fem. to SMA-fem.
Frequency	DC - 18.0 GHz
VSWR max.	1.06 + 0.005 x f(GHz)

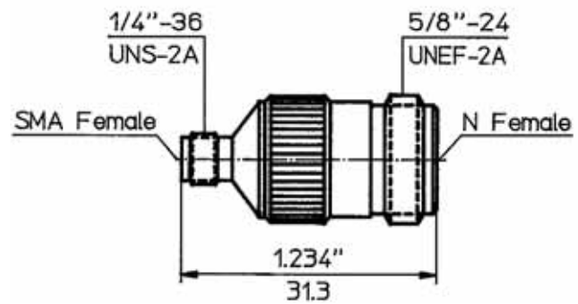

Part - No.	8005-2161-02
Connectors	N-fem. to SMA-fem.
Frequency	DC - 18.0 GHz
VSWR max.	1.06 + 0.005 x f(GHz)

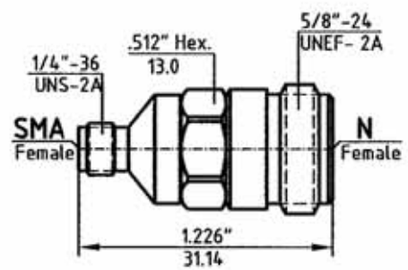

Part - No.	8U05-2161-02
Connectors	N-fem. to SMA-fem.
Frequency	DC - 18.0 GHz
VSWR max.	1.06 + 0.005 x f(GHz)

Higher Temperature applications

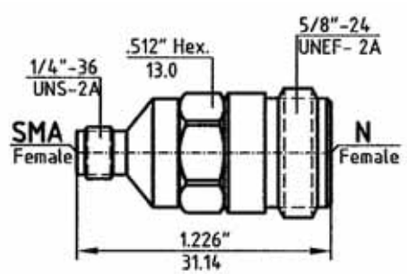

Part - No.	8002-2161-02
Connectors	N-fem. to SMA-fem.
Frequency	DC - 18.0 GHz
VSWR max.	1.06 + 0.005 x f(GHz)

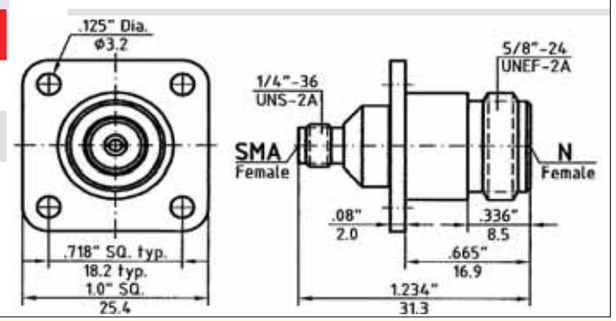

K

Dimensions shown are Inches over Millimeters or vice versa. Standard units have stainless finish (last 2 digits of the P/N are -02). Interfaces are per DIN 47 223, DIN 47 226, IEC 169-4, IEC 169-7, IEC 169-8, IEC 457-2, IEC 60169-5, IEEE 287, MIL-PRF-39012, MIL DTL-24044, MIL DTL-3643,MIL-STD-348B, where applicable

Spectrum Elektrotechnik GmbH
Germany
www.spectrum-et.com
sales@spectrum-et.com
Phone: +49 / 89 / 35 48 04 0
Fax: +49 / 89 / 35 48 04 90

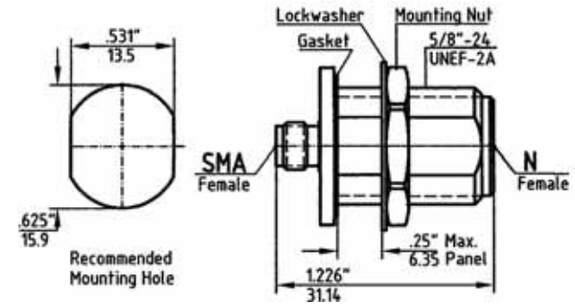

Part - No.	8003-2161-02
Connectors	N-fem. to SMA-fem.
Frequency	DC - 18.0 GHz
VSWR max.	1.06 + 0.005 x f(GHz)

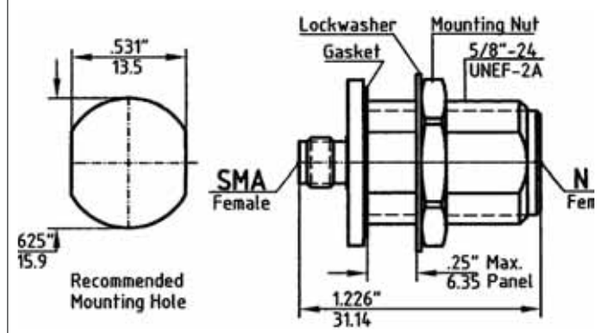

Part - No.	8U03-2161-02
Connectors	N-fem. to SMA-fem.
Frequency	DC - 18.0 GHz
VSWR max.	1.06 + 0.005 x f(GHz)

Higher Temperature applications

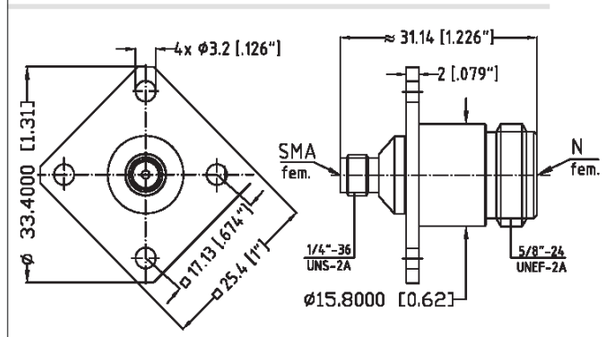

Part - No.	8004-2161-02
Connectors	N-fem. to SMA-fem.
Frequency	DC - 18.0 GHz
VSWR max.	1.06 + 0.005 x f(GHz)

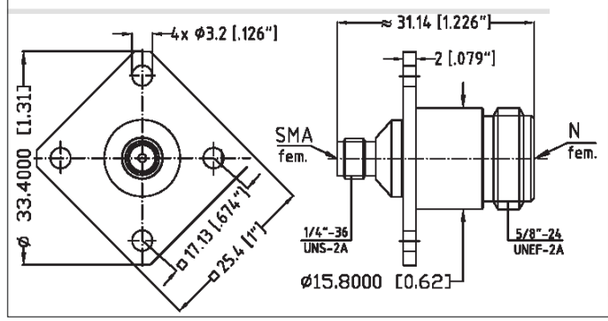

Part - No.	8U04-2161-02
Connectors	N-fem. to SMA-fem.
Frequency	DC - 18.0 GHz
VSWR max.	1.06 + 0.005 x f(GHz)

Higher Temperature applications

K

Dimensions shown are Inches over Millimeters or vice versa. Standard units have stainless finish (last 2 digits of the P/N are -02). Interfaces are per DIN 47 223, DIN 47 226, IEC 169-4, IEC 169-7, IEC 169-8, IEC 457-2, IEC 60169-5, IEEE 287, MIL-PRF-39012, MIL DTL-24044, MIL DTL-3643,MIL-STD-348B, where applicable

Spectrum Elektrotechnik GmbH
Germany
www.spectrum-et.com
sales@spectrum-et.com
Phone: +49 / 89 / 35 48 04 0
Fax: +49 / 89 / 35 48 04 90

Part - No.	8006-2161-02
Connectors	N-fem. to SMA-fem.
Frequency	DC - 18.0 GHz
VSWR max.	1.06 + 0.005 x f(GHz)

Gasket at the flange at the SMA Side

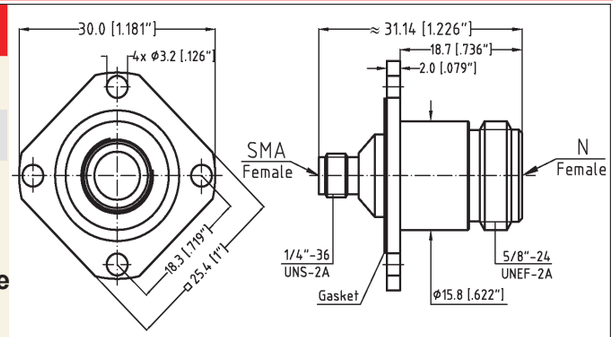

Part - No.	8U06-2161-02
Connectors	N-fem. to SMA-fem.
Frequency	DC - 18.0 GHz
VSWR max.	1.06 + 0.005 x f(GHz)

Higher Temperature applications

Gasket at the flange at the SMA Side

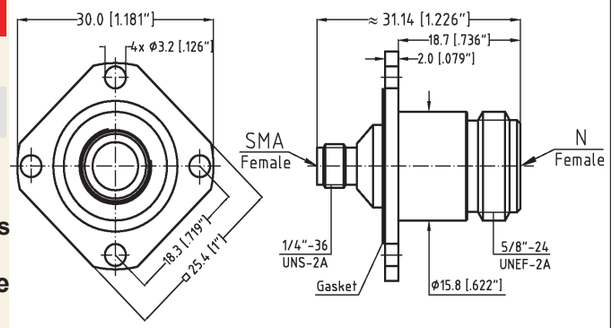

Part - No.	8001-1161-02
Connectors	N-fem. to SMA-male
Frequency	DC - 18.0 GHz
VSWR max.	1.06 + 0.005 x f(GHz)

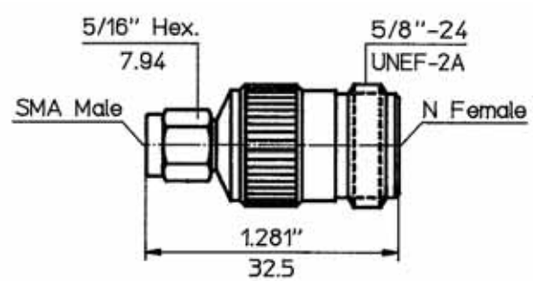

Part - No.	8U01-1161-02
Connectors	N-fem. to SMA-male
Frequency	DC - 18.0 GHz
VSWR max.	1.06 + 0.005 x f(GHz)

Higher Temperature applications

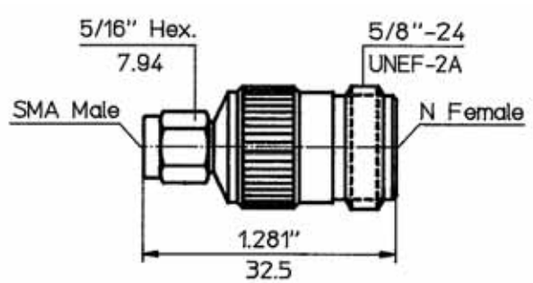

K

Dimensions shown are Inches over Millimeters or vice versa. Standard units have stainless finish (last 2 digits of the P/N are -02). Interfaces are per DIN 47 223, DIN 47 226, IEC 169-4, IEC 169-7, IEC 169-8, IEC 457-2, IEC 60169-5, IEEE 287, MIL-PRF-39012, MIL DTL-24044, MIL DTL-3643,MIL-STD-348B, where applicable

Spectrum Elektrotechnik GmbH
Germany
www.spectrum-et.com
sales@spectrum-et.com
Phone: +49 / 89 / 35 48 04 0
Fax: +49 / 89 / 35 48 04 90

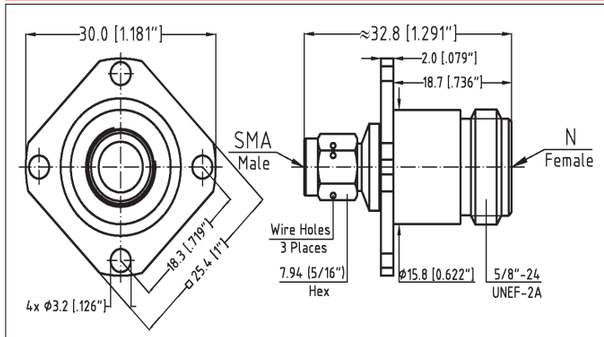

Part - No.	8002-1161-02
Connectors	N-fem. to SMA-male
Frequency	DC - 18.0 GHz
VSWR max.	1.06 + 0.005 x f(GHz)

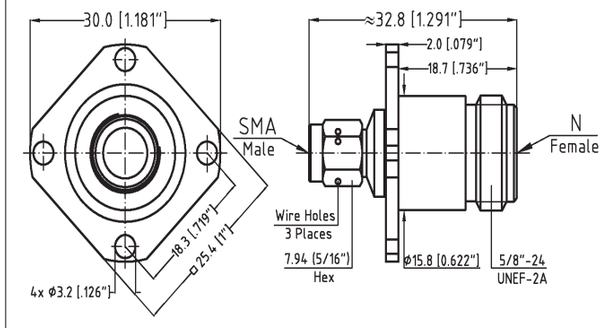

Part - No.	8U02-1161-02
Connectors	N-fem. to SMA-male
Frequency	DC - 18.0 GHz
VSWR max.	1.06 + 0.005 x f(GHz)

Higher Temperature applications

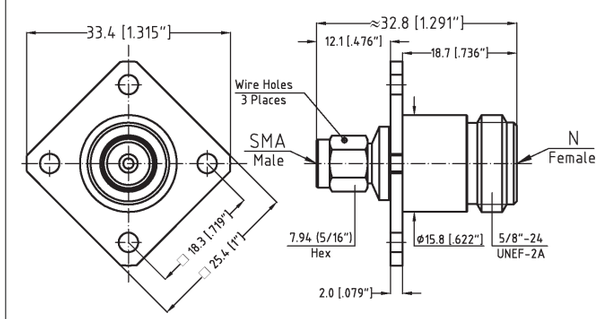

Part - No.	8003-1161-02
Connectors	N-fem. to SMA-male
Frequency	DC - 18.0 GHz
VSWR max.	1.06 + 0.005 x f(GHz)

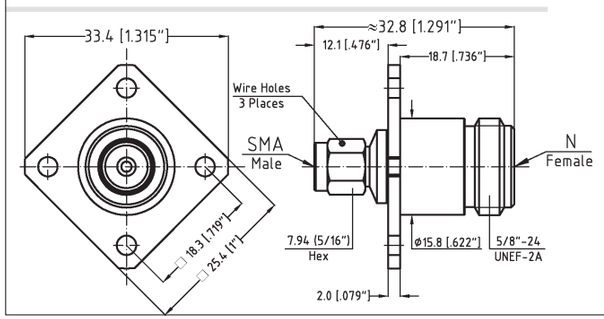

Part - No.	8U03-1161-02
Connectors	N-fem. to SMA-male
Frequency	DC - 18.0 GHz
VSWR max.	1.06 + 0.005 x f(GHz)

Higher Temperature applications

K

Dimensions shown are Inches over Millimeters or vice versa. Standard units have stainless finish (last 2 digits of the P/N are -02). Interfaces are per DIN 47 223, DIN 47 226, IEC 169-4, IEC 169-7, IEC 169-8, IEC 457-2, IEC 60169-5, IEEE 287, MIL-PRF-39012, MIL DTL-24044, MIL DTL-3643,MIL-STD-348B, where applicable

Spectrum Elektrotechnik GmbH
Germany
www.spectrum-et.com
sales@spectrum-et.com
Phone: +49 / 89 / 35 48 04 0
Fax: +49 / 89 / 35 48 04 90

Part - No.	8004-1161-02
Connectors	N-fem. to SMA-male
Frequency	DC - 18.0 GHz
VSWR max.	1.06 + 0.005 x f(GHz)

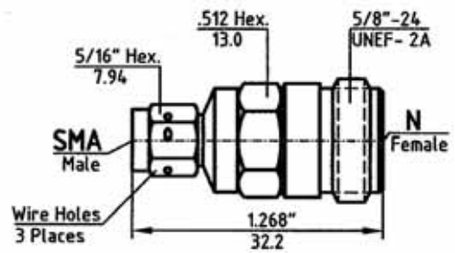

Part - No.	8U04-1161-02
Connectors	N-fem. to SMA-male
Frequency	DC - 18.0 GHz
VSWR max.	1.06 + 0.005 x f(GHz)

Higher Temperature applications

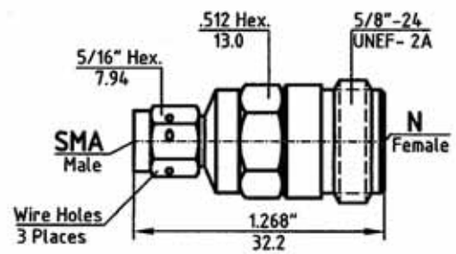

Part - No.	8005-1161-02
Connectors	N-fem. to SMA-male
Frequency	DC - 18.0 GHz
VSWR max.	1.06 + 0.005 x f(GHz)

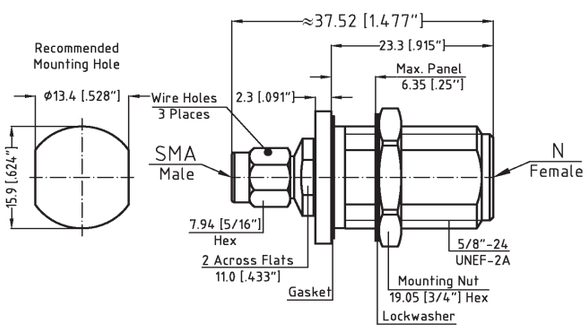

Part - No.	8U05-1161-02
Connectors	N-fem. to SMA-male
Frequency	DC - 18.0 GHz
VSWR max.	1.06 + 0.005 x f(GHz)

Higher Temperature applications

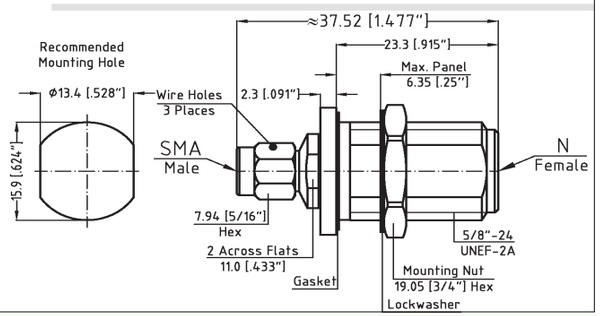

K

Dimensions shown are Inches over Millimeters or vice versa. Standard units have stainless finish (last 2 digits of the P/N are -02). Interfaces are per DIN 47 223, DIN 47 226, IEC 169-4, IEC 169-7, IEC 169-8, IEC 457-2, IEC 60169-5, IEEE 287, MIL-PRF-39012, MIL DTL-24044, MIL DTL-3643,MIL-STD-348B, where applicable

Spectrum Elektrotechnik GmbH
Germany
www.spectrum-et.com
sales@spectrum-et.com
Phone: +49 / 89 / 35 48 04 0
Fax: +49 / 89 / 35 48 04 90

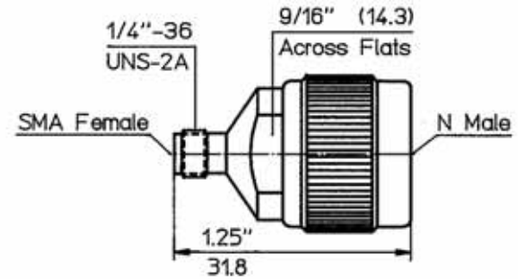

Part - No.	8001-2151-02
Connectors	N-male to SMA-fem.
Frequency	DC - 18.0 GHz
VSWR max.	1.06 + 0.005 x f(GHz)

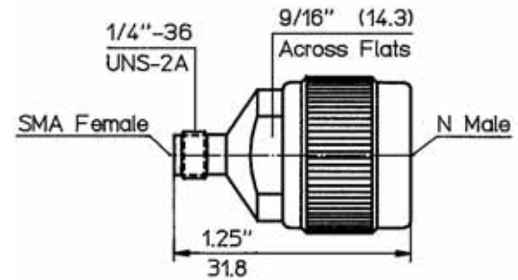

Part - No.	8U01-2151-02
Connectors	N-male to SMA-fem.
Frequency	DC - 18.0 GHz
VSWR max.	1.06 + 0.005 x f(GHz)

Higher Temperature applications

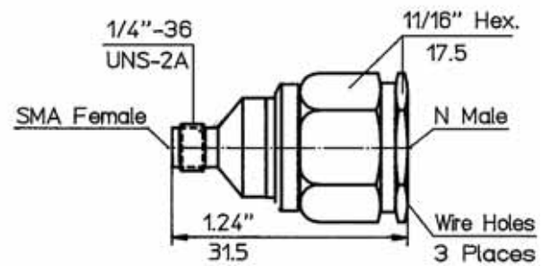

Part - No.	8002-2151-02
Connectors	N-male to SMA-fem.
Frequency	DC - 18.0 GHz
VSWR max.	1.06 + 0.005 x f(GHz)

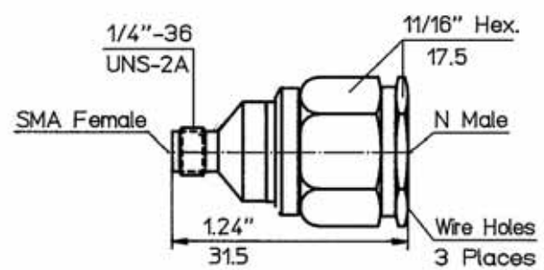

Part - No.	8U02-2151-02
Connectors	N-male to SMA-fem.
Frequency	DC - 18.0 GHz
VSWR max.	1.06 + 0.005 x f(GHz)

Higher Temperature applications

K

Dimensions shown are Inches over Millimeters or vice versa. Standard units have stainless finish (last 2 digits of the P/N are -02). Interfaces are per DIN 47 223, DIN 47 226, IEC 169-4, IEC 169-7, IEC 169-8, IEC 457-2, IEC 60169-5, IEEE 287, MIL-PRF-39012, MIL DTL-24044, MIL DTL-3643,MIL-STD-348B, where applicable

Spectrum Elektrotechnik GmbH
Germany
www.spectrum-et.com
sales@spectrum-et.com
Phone: +49 / 89 / 35 48 04 0
Fax: +49 / 89 / 35 48 04 90

Part - No.	8003-2151-02
Connectors	N-male to SMA-fem.
Frequency	DC - 18.0 GHz
VSWR max.	1.06 + 0.005 x f(GHz)

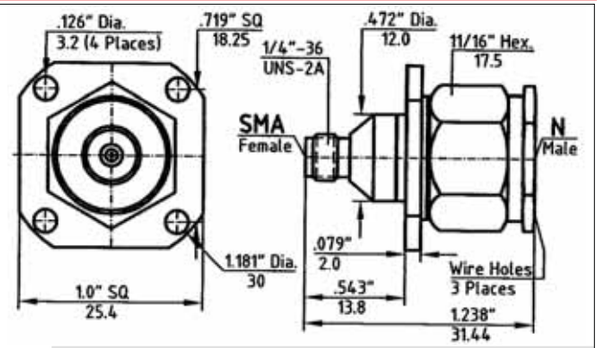

Part - No.	8U03-2151-02
Connectors	N-male to SMA-fem.
Frequency	DC - 18.0 GHz
VSWR max.	1.06 + 0.005 x f(GHz)

Higher Temperature applications

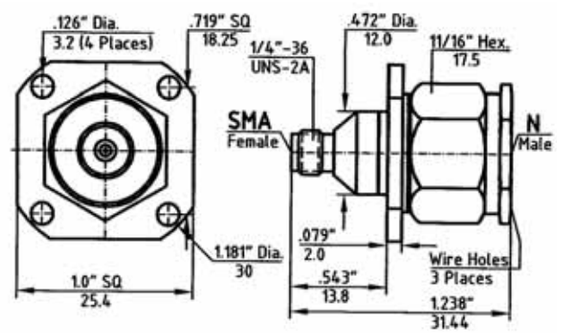

Part - No.	8004-2151-02
Connectors	N-male to SMA-fem.
Frequency	DC - 18.0 GHz
VSWR max.	1.06 + 0.005 x f(GHz)

Gasket at the flange at the SMA Side

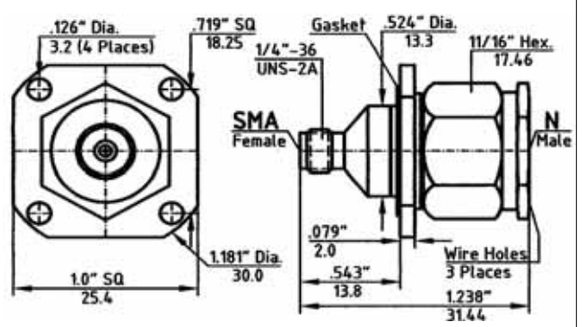

Part - No.	8U04-2151-02
Connectors	N-male to SMA-fem.
Frequency	DC - 18.0 GHz
VSWR max.	1.06 + 0.005 x f(GHz)

Higher Temperature applications
Gasket at the flange at the SMA Side

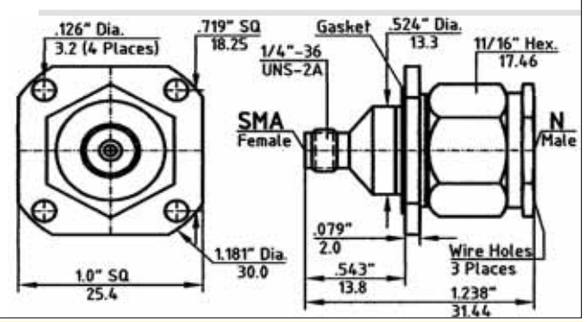

K

Dimensions shown are Inches over Millimeters or vice versa. Standard units have stainless finish (last 2 digits of the P/N are -02). Interfaces are per DIN 47 223, DIN 47 226, IEC 169-4, IEC 169-7, IEC 169-8, IEC 457-2, IEC 60169-5, IEEE 287, MIL-PRF-39012, MIL DTL-24044, MIL DTL-3643,MIL-STD-348B, where applicable

Spectrum Elektrotechnik GmbH
Germany
www.spectrum-et.com
sales@spectrum-et.com
Phone: +49 / 89 / 35 48 04 0
Fax: +49 / 89 / 35 48 04 90

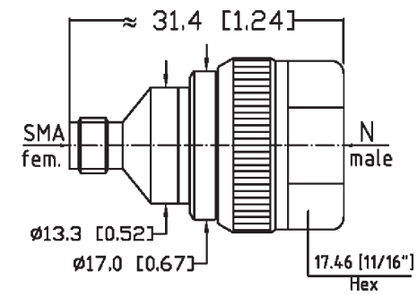

Part - No.	8005-2151-02
Connectors	N-male to SMA-fem.
Frequency	DC - 18.0 GHz
VSWR max.	1.06 + 0.005 x f(GHz)

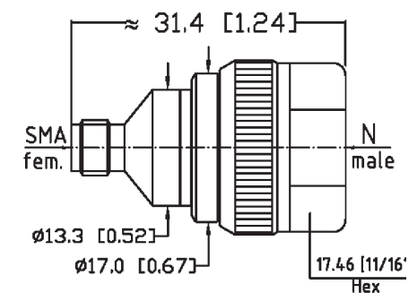

Part - No.	8U05-2151-02
Connectors	N-male to SMA-fem.
Frequency	DC - 18.0 GHz
VSWR max.	1.06 + 0.005 x f(GHz)

Higher Temperature applications

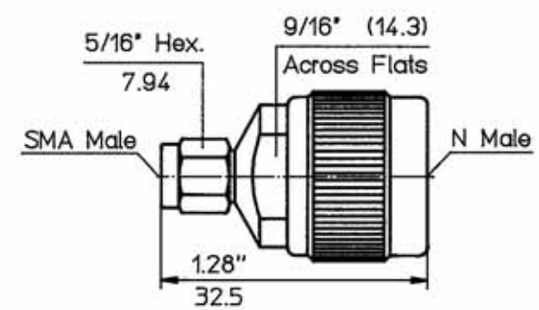

Part - No.	8001-1151-02
Connectors	N-male to SMA-male
Frequency	DC - 18.0 GHz
VSWR max.	1.06 + 0.005 x f(GHz)

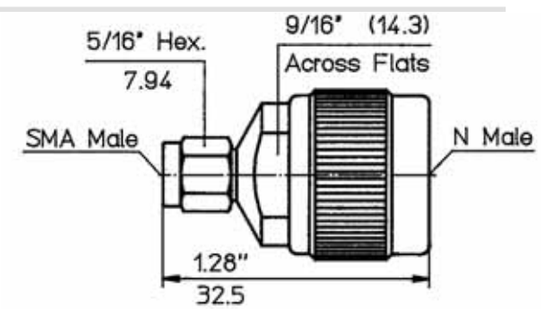

Part - No.	8U01-1151-02
Connectors	N-male to SMA-male
Frequency	DC - 18.0 GHz
VSWR max.	1.06 + 0.005 x f(GHz)

Higher Temperature applications

K

Dimensions shown are Inches over Millimeters or vice versa. Standard units have stainless finish (last 2 digits of the P/N are -02). Interfaces are per DIN 47 223, DIN 47 226, IEC 169-4, IEC 169-7, IEC 169-8, IEC 457-2, IEC 60169-5, IEEE 287, MIL-PRF-39012, MIL DTL-24044, MIL DTL-3643,MIL-STD-348B, where applicable

Spectrum Elektrotechnik GmbH
Germany
www.spectrum-et.com
sales@spectrum-et.com
Phone: +49 / 89 / 35 48 04 0
Fax: +49 / 89 / 35 48 04 90

Part - No.	8002-1151-02
Connectors	N-male to SMA-male
Frequency	DC - 18.0 GHz
VSWR max.	1.06 + 0.005 x f(GHz)

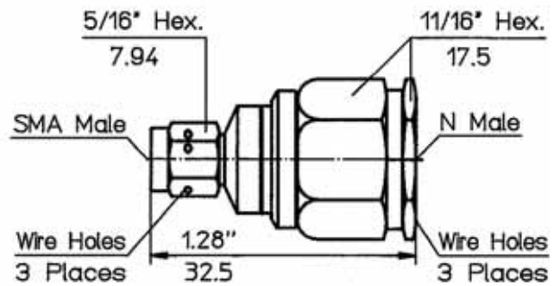

Part - No.	8U02-1151-02
Connectors	N-male to SMA-male
Frequency	DC - 18.0 GHz
VSWR max.	1.06 + 0.005 x f(GHz)

Higher Temperature applications

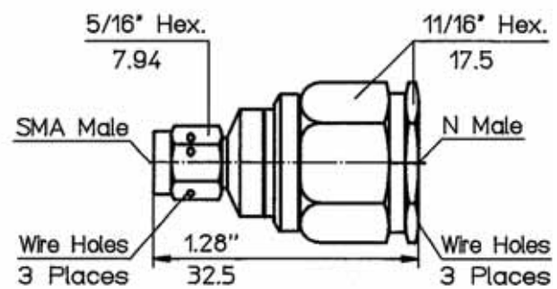

Dimensions shown are Inches over Millimeters or vice versa. Standard units have stainless finish (last 2 digits of the P/N are -02). Interfaces are per DIN 47 223, DIN 47 226, IEC 169-4, IEC 169-7, IEC 169-8, IEC 457-2, IEC 60169-5, IEEE 287, MIL-PRF-39012, MIL DTL-24044, MIL DTL-3643,MIL-STD-348B, where applicable

Spectrum Elektrotechnik GmbH
Germany
www.spectrum-et.com
sales@spectrum-et.com
Phone: +49 / 89 / 35 48 04 0
Fax: +49 / 89 / 35 48 04 90

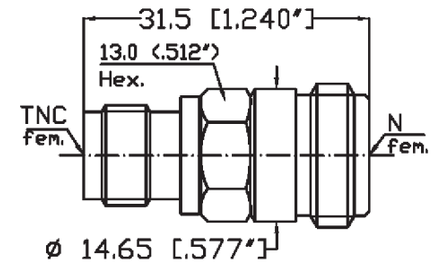

Part - No.	8001-4161-02
Connectors	N-fem. to TNCA-fem.
Frequency	DC - 18.0 GHz
VSWR max.	1.06 + 0.005 x f(GHz)

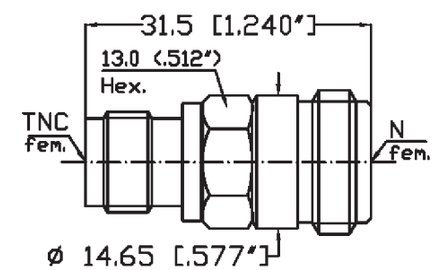

Part - No.	8U01-4161-02
Connectors	N-fem. to TNCA-fem.
Frequency	DC - 18.0 GHz
VSWR max.	1.06 + 0.005 x f(GHz)

Higher Temperature applications

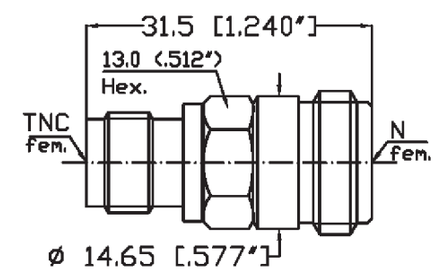

Part - No.	8U0V-4161-02
Connectors	N-fem. to TNCA-fem.
Frequency	DC - 18.0 GHz
VSWR max.	1.06 + 0.005 x f(GHz)

Higher Temperature applications

Unit has Venting Holes

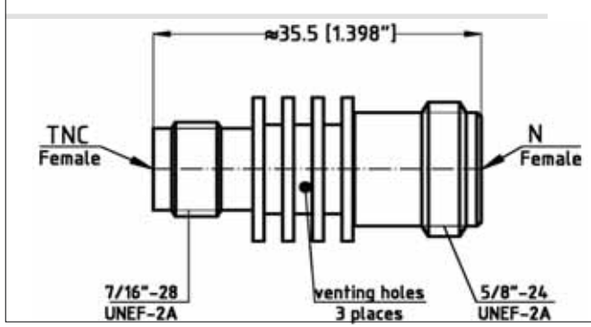

Part - No.	825V-4161-02
Connectors	N-fem. to TNCA-fem.
Frequency	DC - 18.0 GHz
VSWR max.	1.06 + 0.005 x f(GHz)

Higher Power Application

Dimensions shown are Inches over Millimeters or vice versa. Standard units have stainless finish (last 2 digits of the P/N are -02). Interfaces are per DIN 47 223, DIN 47 226, IEC 169-4, IEC 169-7, IEC 169-8, IEC 457-2, IEC 60169-5, IEEE 287, MIL-PRF-39012, MIL DTL-24044, MIL DTL-3643,MIL-STD-348B, where applicable

Spectrum Elektrotechnik GmbH
Germany
www.spectrum-et.com
sales@spectrum-et.com
Phone: +49 / 89 / 35 48 04 0
Fax: +49 / 89 / 35 48 04 90

Part - No.	8001-4160-02
Connectors	N-fem. to TNC-fem.
Frequency	DC - 18.0 GHz
VSWR max.	1.06 + 0.005 x f(GHz)

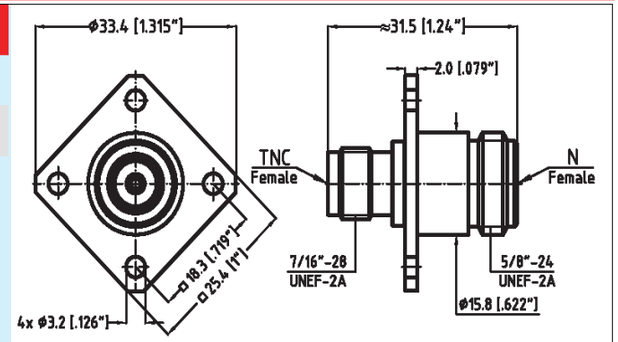

Part - No.	8U01-4160-02
Connectors	N-fem. to TNC-fem.
Frequency	DC - 18.0 GHz
VSWR max.	1.06 + 0.005 x f(GHz)

Higher Temperature applications

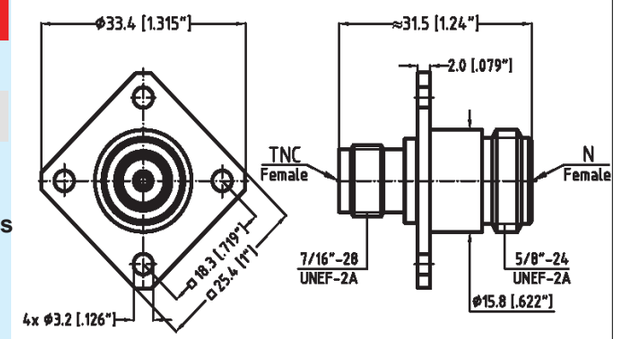

Part - No.	8050-4161-00
Connectors	N-fem. to TNC-fem.
Frequency	DC - 12.4 GHz
VSWR max.	1.06 + 0.005 x f(GHz)

Higher Power Application

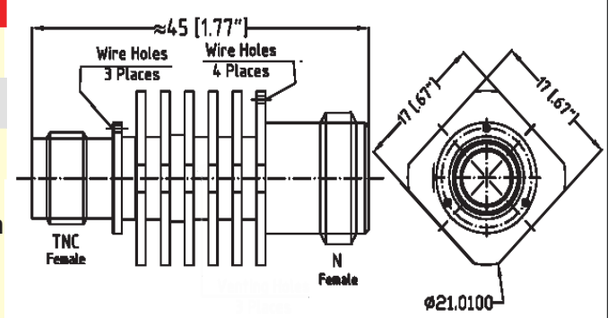

Part - No.	805V-4161-00
Connectors	N-fem. to TNC-fem.
Frequency	DC - 13.0 GHz
VSWR max.	1.06 + 0.005 x f(GHz)

Higher Power Application

Unit has Venting Holes

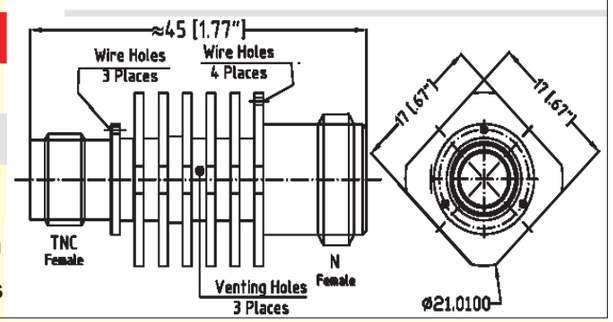

K

Dimensions shown are Inches over Millimeters or vice versa. Standard units have stainless finish (last 2 digits of the P/N are -02). Interfaces are per DIN 47 223, DIN 47 226, IEC 169-4, IEC 169-7, IEC 169-8, IEC 457-2, IEC 60169-5, IEEE 287, MIL-PRF-39012, MIL DTL-24044, MIL DTL-3643,MIL-STD-348B, where applicable

Spectrum Elektrotechnik GmbH
Germany
www.spectrum-et.com
sales@spectrum-et.com
Phone: +49 / 89 / 35 48 04 0
Fax: +49 / 89 / 35 48 04 90

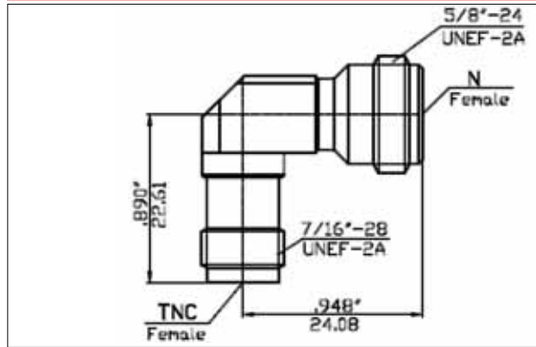

Part - No.	8190-4161-02
Connectors	N-fem. to TNC-fem.
Frequency	DC - 18.0 GHz
VSWR max.	1.06 + 0.005 x f(GHz)

Mitred right angle

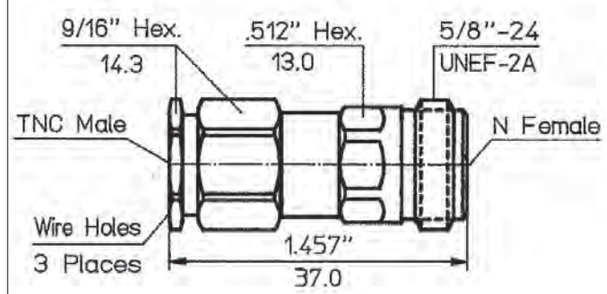

Part - No.	8001-3161-02
Connectors	N-fem. to TNC-male
Frequency	DC - 18.0 GHz
VSWR max.	1.06 + 0.005 x f(GHz)

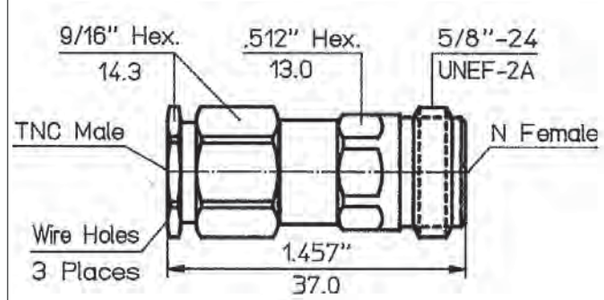

Part - No.	8U01-3161-02
Connectors	N-fem. to TNC-male
Frequency	DC - 18.0 GHz
VSWR max.	1.06 + 0.005 x f(GHz)

Higher Temperature Application

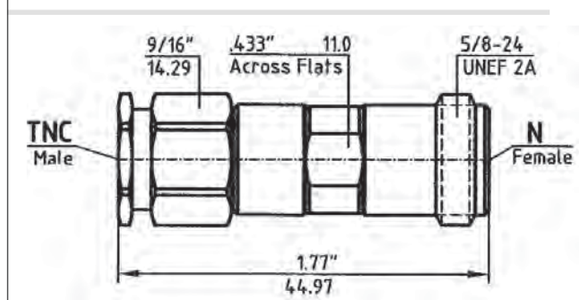

Part - No.	8050-3161-02
Connectors	N-fem. to TNC-male
Frequency	DC - 18.0 GHz
VSWR max.	1.06 + 0.005 x f(GHz)

K

Dimensions shown are Inches over Millimeters or vice versa. Standard units have stainless finish (last 2 digits of the P/N are -02). Interfaces are per DIN 47 223, DIN 47 226, IEC 169-4, IEC 169-7, IEC 169-8, IEC 457-2, IEC 60169-5, IEEE 287, MIL-PRF-39012, MIL DTL-24044, MIL DTL-3643,MIL-STD-348B, where applicable

Spectrum Elektrotechnik GmbH
Germany
www.spectrum-et.com
sales@spectrum-et.com
Phone: +49 / 89 / 35 48 04 0
Fax: +49 / 89 / 35 48 04 90

Part - No.	805V-3161-00
Connectors	N-fem. to TNC-male
Frequency	DC - 13.0 GHz
VSWR max.	1.06 + 0.005 x f(GHz)

High Power Design with cooling fins
Outer Conductor is stainl. steel gold plated, coupling nut is stainless steel passivated

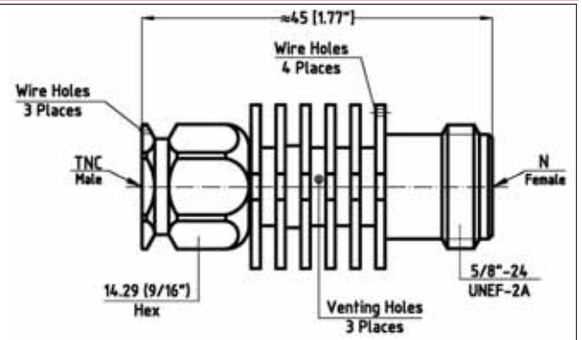

Part - No.	8V51-3161-00
Connectors	N-fem. to TNC-male
Frequency	DC - 13.0 GHz
VSWR max.	1.06 + 0.005 x f(GHz)

High Power Design with cooling fins
Outer Conductor is stainl. steel gold plated, coupling nut is stainless steel passivated

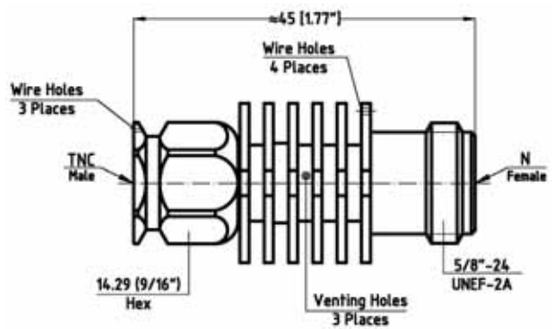

Part - No.	8051-3161-02
Connectors	N-fem. to TNC-male
Frequency	DC - 18.0 GHz
VSWR max.	1.06 + 0.005 x f(GHz)

High Power Design with cooling fins
Outer Conductor and coupling nut are stainless steel passivated

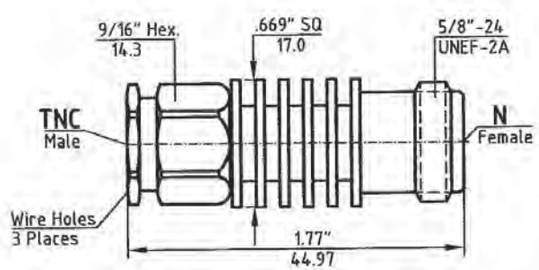

Part - No.	8052-3161-02
Connectors	N-fem. to TNC-male
Frequency	DC - 13.0 GHz
VSWR max.	1.06 + 0.005 x f(GHz)

High Power Design with cooling fins
Outer Conductor is stainl. steel gold plated, coupling nuts are stainless steel passivated

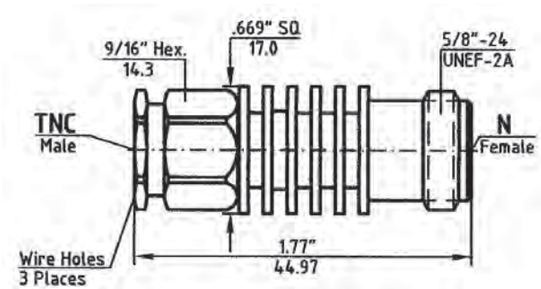

K

Dimensions shown are Inches over Millimeters or vice versa. Standard units have stainless finish (last 2 digits of the P/N are -02). Interfaces are per DIN 47 223, DIN 47 226, IEC 169-4, IEC 169-7, IEC 169-8, IEC 457-2, IEC 60169-5, IEEE 287, MIL-PRF-39012, MIL DTL-24044, MIL DTL-3643,MIL-STD-348B, where applicable

Spectrum Elektrotechnik GmbH
Germany
www.spectrum-et.com
sales@spectrum-et.com
Phone: +49 / 89 / 35 48 04 0
Fax: +49 / 89 / 35 48 04 90

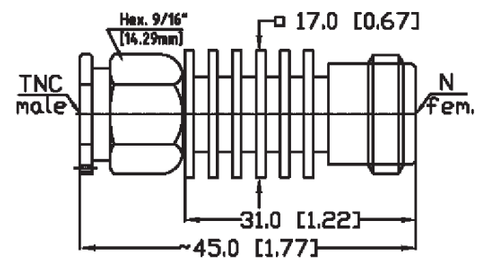

Part - No.	8058-3161-02
Connectors	N-fem. to TNC-male
Frequency	DC - 18.0 GHz
VSWR max.	1.06 + 0.005 x f(GHz)

High Power Design with cooling fins
Outer Conductor and coupling nut are stainless steel passivated

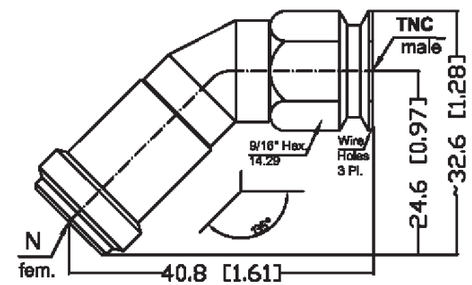

Part - No.	8045-3161-02
Connectors	N-fem. to TNC-male
Frequency	DC - 18.0 GHz
VSWR max.	1.06 + 0.008 x f(GHz)

135" angle

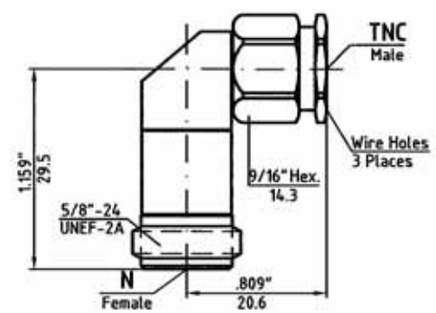

Part - No.	8090-3161-02
Connectors	N-fem. to TNC-male
Frequency	DC - 18.0 GHz
VSWR max.	1.06 + 0.008 x f(GHz)

Mitred right angle

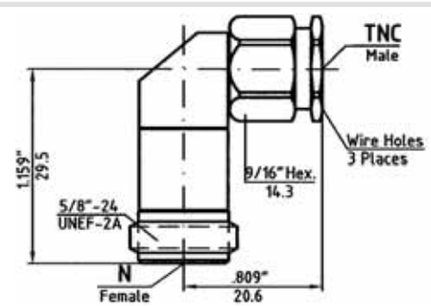

Part - No.	8U90-3161-02
Connectors	N-fem. to TNC-male
Frequency	DC - 18.0 GHz
VSWR max.	1.06 + 0.008 x f(GHz)

Mitred right angle
Higher Temperature applications

K

Dimensions shown are Inches over Millimeters or vice versa. Standard units have stainless finish (last 2 digits of the P/N are -02). Interfaces are per DIN 47 223, DIN 47 226, IEC 169-4, IEC 169-7, IEC 169-8, IEC 457-2, IEC 60169-5, IEEE 287, MIL-PRF-39012, MIL DTL-24044, MIL DTL-3643,MIL-STD-348B, where applicable

Spectrum Elektrotechnik GmbH
Germany
www.spectrum-et.com
sales@spectrum-et.com
Phone: +49 / 89 / 35 48 04 0
Fax: +49 / 89 / 35 48 04 90

Part - No.	8190-3161-02
Connectors	N-fem. to TNC-male
Frequency	DC - 18.0 GHz
VSWR max.	1.06 + 0.008 x f(GHz)

Mitred right angle

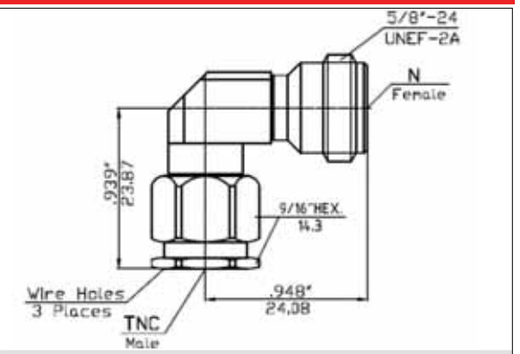

Part - No.	8001-4151-02
Connectors	N-male to TNC-fem.
Frequency	DC - 18.0 GHz
VSWR max.	1.06 + 0.005 x f(GHz)

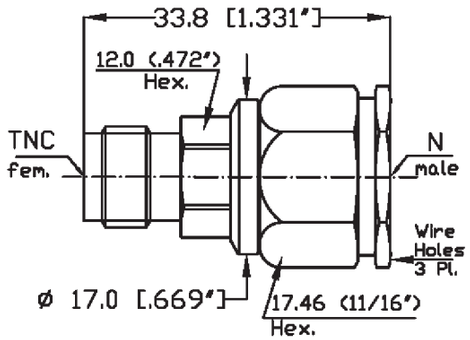

Part - No.	8U01-4151-02
Connectors	N-male to TNC-fem.
Frequency	DC - 18.0 GHz
VSWR max.	1.06 + 0.005 x f(GHz)

Higher Temperature applications

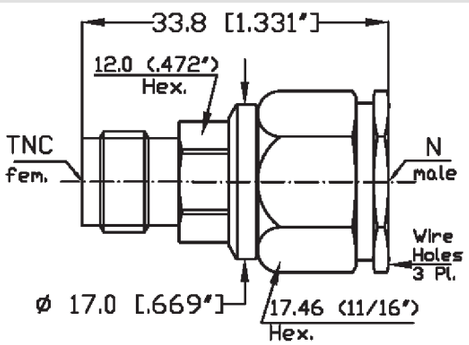

You do not find the Adapter you need for an application? You need technical support? You need price and delivery information? Please contact your nearest Spectrum Representative, or please contact us direct.

Telephone: +49-89-3548-040 Facsimile: +49-89-3548-0490
e-mail: sales@spectrum-et.com www.spectrum-et.com

K

Dimensions shown are Inches over Millimeters or vice versa. Standard units have stainless finish (last 2 digits of the P/N are -02). Interfaces are per DIN 47 223, DIN 47 226, IEC 169-4, IEC 169-7, IEC 169-8, IEC 457-2, IEC 60169-5, IEEE 287, MIL-PRF-39012, MIL DTL-24044, MIL DTL-3643,MIL-STD-348B, where applicable

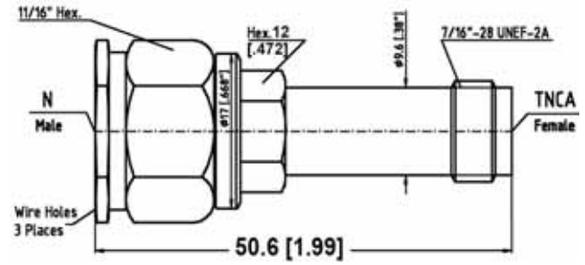

Part - No.	8002-4151-02
Connectors	N-male to TNC-fem.
Frequency	DC - 18.0 GHz
VSWR max.	1.06 + 0.005 x f(GHz)

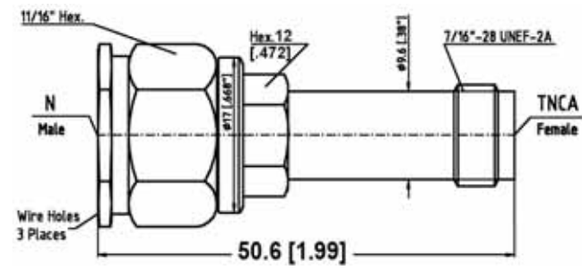

Part - No.	8U02-4151-02
Connectors	N-male to TNC-fem.
Frequency	DC - 18.0 GHz
VSWR max.	1.06 + 0.005 x f(GHz)

Higher Temperature Application

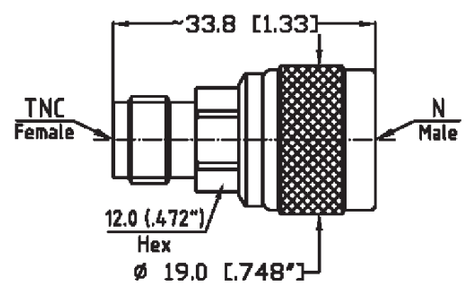

Part - No.	8003-4151-02
Connectors	N-male to TNC-fem.
Frequency	DC - 18.0 GHz
VSWR max.	1.06 + 0.005 x f(GHz)

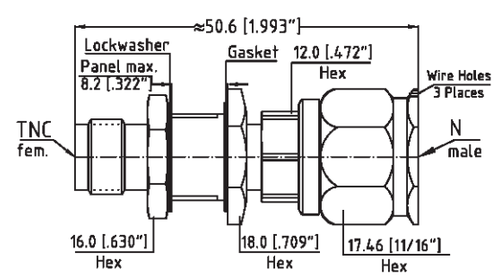

Part - No.	8004-4151-02
Connectors	N-male to TNC-fem.
Frequency	DC - 18.0 GHz
VSWR max.	1.06 + 0.005 x f(GHz)

K

Dimensions shown are Inches over Millimeters or vice versa. Standard units have stainless finish (last 2 digits of the P/N are -02). Interfaces are per DIN 47 223, DIN 47 226, IEC 169-4, IEC 169-7, IEC 169-8, IEC 457-2, IEC 60169-5, IEEE 287, MIL-PRF-39012, MIL DTL-24044, MIL DTL-3643,MIL-STD-348B, where applicable

Part - No.	8050-4151-00
Connectors	N-male to TNC-fem.
Frequency	DC - 12.4 GHz
VSWR max.	1.06 + 0.005 x f(GHz)

High Power Design with cooling fins
Outer Conductor is stainl. steel gold plated, coupling nut is stainless steel passivated

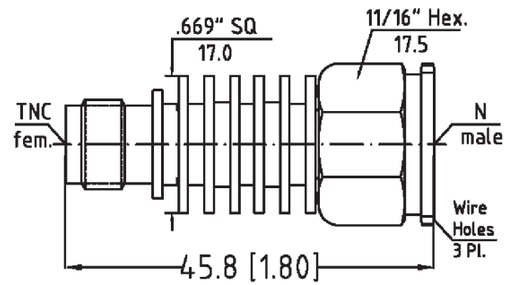

Part - No.	805V-4151-00
Connectors	N-male to TNC-fem.
Frequency	DC - 13.0 GHz
VSWR max.	1.06 + 0.005 x f(GHz)

High Power Design with cooling fins
Outer Conductor is stainl. steel gold plated, coupling nut is stainless steel passivated
Unit has Venting Holes

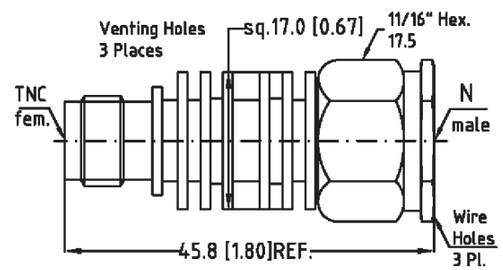

Part - No.	8058-4151-02
Connectors	N-male to TNC-fem.
Frequency	DC - 18.0 GHz
VSWR max.	1.06 + 0.005 x f(GHz)

High Power Design with cooling fins
Outer Conductor is stainl. steel gold plated, coupling nut is stainless steel passivated

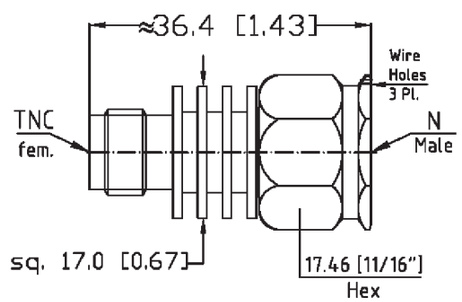

Although our catalog incorporates a very comprehensive range of products, due to our program of continuous development, there is no way that it will contain every product we manufacture. Please consult the factory for the product you require.

K

Dimensions shown are Inches over Millimeters or vice versa. Standard units have stainless finish (last 2 digits of the P/N are -02). Interfaces are per DIN 47 223, DIN 47 226, IEC 169-4, IEC 169-7, IEC 169-8, IEC 457-2, IEC 60169-5, IEEE 287, MIL-PRF-39012, MIL DTL-24044, MIL DTL-3643,MIL-STD-348B, where applicable

Spectrum Elektrotechnik GmbH
Germany
www.spectrum-et.com
sales@spectrum-et.com
Phone: +49 / 89 / 35 48 04 0
Fax: +49 / 89 / 35 48 04 90

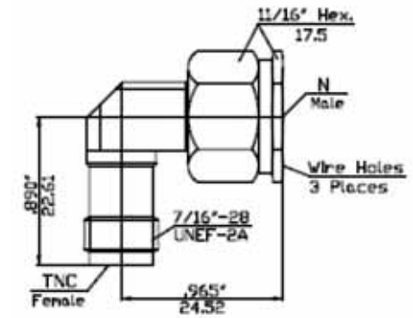

Part - No.	8190-4151-02
Connectors	N-male to TNC-fem.
Frequency	DC - 18.0 GHz
VSWR max.	1.06 + 0.008 x f(GHz)

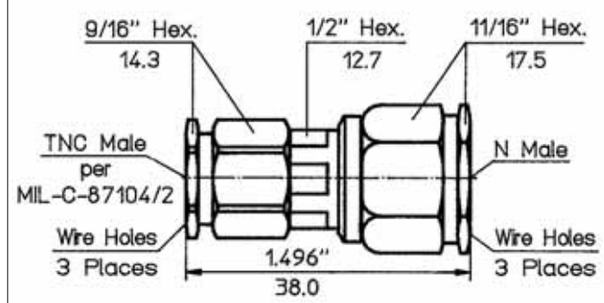

Part - No.	8001-3151-02
Connectors	N-male to TNC-male
Frequency	DC - 18.0 GHz
VSWR max.	1.06 + 0.005 x f(GHz)

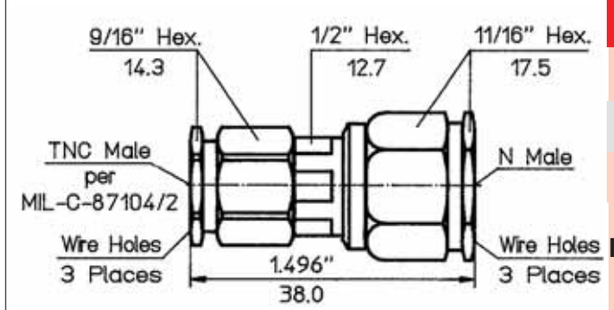

Part - No.	8U01-3151-02
Connectors	N-male to TNC-male
Frequency	DC - 18.0 GHz
VSWR max.	1.06 + 0.005 x f(GHz)

Higher Temperature Application

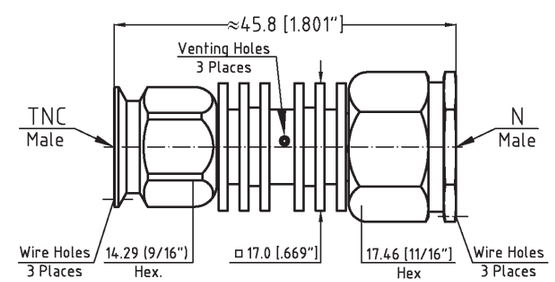

Part - No.	805V-3151-00
Connectors	N-male to TNC-male
Frequency	DC - 13.0 GHz
VSWR max.	1.06 + 0.005 x f(GHz)

High Power Design with cooling fins
Outer Conductor is stainl. steel gold plated, coupling nuts are stainless steel passivated

K

Dimensions shown are Inches over Millimeters or vice versa. Standard units have stainless finish (last 2 digits of the P/N are -02). Interfaces are per DIN 47 223, DIN 47 226, IEC 169-4, IEC 169-7, IEC 169-8, IEC 457-2, IEC 60169-5, IEEE 287, MIL-PRF-39012, MIL DTL-24044, MIL DTL-3643,MIL-STD-348B, where applicable

Spectrum Elektrotechnik GmbH
Germany
www.spectrum-et.com
sales@spectrum-et.com
Phone: +49 / 89 / 35 48 04 0
Fax: +49 / 89 / 35 48 04 90

Part - No.	8045-3151-02
Connectors	N-male to TNC-male
Frequency	DC - 18.0 GHz
VSWR max.	1.06 + 0.008 x f(GHz)

135° / (45°) angled unit

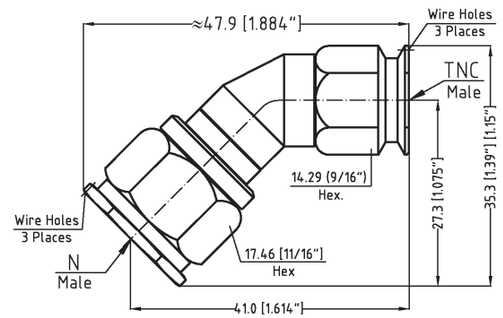

Part - No.	8050-3151-02
Connectors	N-male to TNC-male
Frequency	DC - 12.4 GHz
VSWR max.	1.06 + 0.005 x f(GHz)

High Power Design with cooling fins
Outer Conductor is stainl. steel gold plated, coupling nuts are stainless steel passivated

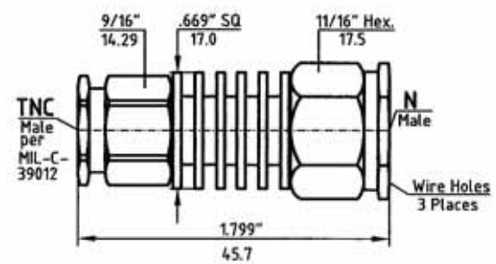

Part - No.	8190-3151-02
Connectors	N-male to TNC-male
Frequency	DC - 18.0 GHz
VSWR max.	1.06 + 0.008 x f(GHz)

Mitred right angle

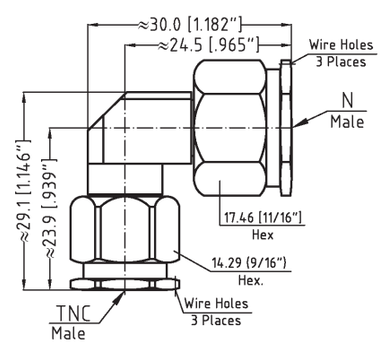

You do not find the Adapter you need for an application? You need technical support? You need price and delivery information? Please contact your nearest Spectrum Representative, or please contact us direct.

Telephone: +49-89-3548-040 Facsimile: +49-89-3548-0490
e-mail: sales@spectrum-et.com www.spectrum-et.com

K

Dimensions shown are Inches over Millimeters or vice versa. Standard units have stainless finish (last 2 digits of the P/N are -02). Interfaces are per DIN 47 223, DIN 47 226, IEC 169-4, IEC 169-7, IEC 169-8, IEC 457-2, IEC 60169-5, IEEE 287, MIL-PRF-39012, MIL DTL-24044, MIL DTL-3643,MIL-STD-348B, where applicable

In-Series and Between-Series Adapters SBX

If your choice of SBX Adapter is not shown in this section, please refer to the Table below to determine other possible locations. Should you not find your adapter listed in any section, please consult the factory or your Spectrum Elektrotechnik Area Representative.

SBX	Section	Page
SBX Overview & Specifications	L	1
Between Series SBX to 7/16		4
Between Series SBX to N		5
Between Series SBX to SMA		7

Although our catalog incorporates a very comprehensive range of products, due to our program of continuous development, there is no way that it will contain every product we manufacture. Please consult the factory for the product you require.
To improve our Standard Products we reserve the right to make changes. Specifications are therefore subject to change without notice.

Dimensions shown are Inches over Millimeters or vice versa. Standard units have stainless finish (last 2 digits of the P/N are -02). Interfaces are per DIN 47 223, DIN 47 226, IEC 169-4, IEC 169-7, IEC 169-8, IEC 457-2, IEC 60169-5, IEEE 287, MIL-PRF-39012, MIL DTL-24044, MIL DTL-3643,MIL-STD-348B, where applicable

The specifications below are general specifications for all SBX connectors. Specific Data for VSWR, Insertion loss, R.F. leakage etc., are available from the factory upon request. Specifications in the following table are recommended for any procurement documents or drawings. In the event of any conflict between these specifications and other documentation, these specifications shall govern. These specifications are subject to change according to the latest revision.

REQUIREMENT	GENERAL SPECIFICATIONS
Standard Materials	STEEL corrosion resistant 1.4305 per DIN EN 10088; ASTM-A582 (303), or 1.4404 (316L) respectively. ALUMINUM AlMg4.5Mn per DIN DIN EN 1706, AlMgSi0.5 per DIN EN 1706, AlMgSi1 per DIN EN 1706 (6061-T6 per QQ-A-225/8). BRASS CuZn39Pb3 per DIN 17660 (QQ-B-626 (ASTM-B124), half hard). COPPER BERYLLIUM 33-25 CuBe2PbH per DIN17666(DIN CEN/TS;DIN SPEC 9700)(QQ-C530). TFE Fluorocarbon per DIN 52900 (ASTM-D-1710) SILICONE RUBBER per DIN ISO 3601)(A-A-59588,Class IIB) Gr. 50 - 75. BORIUM NITRITE Dielectric for high power applications per in-house specification
Finish for COPPER BERYLLIUM STAINLESS STEEL ALUMINUM BRASS VARIOUS	Center Contacts shall be gold plated to a minimum thickness of .00005-inch in accordance with ASTM-B-488, Type III, Code C, Class 1.25 shall be passivated per ASTM-A967 Conductive Parts shall have an iridited finish per MIL-DTL-5541 Other parts, such as Coupling Nuts and Back-Bodies shall be anodized per MIL-A-8625. .00003 inch (0.8 µm) min. gold plating per MIL-DTL-45204, or nickel plating per QQ-N-290, as specified. Imoloy .0001 inch (2.5 µm) min. plating, consisting of 55% Copper / 20% Zinc / 25% Tin (on special request).
Design	The design shall be such that the outline dimensions in this catalog are met. In addition, the assembled connector shall meet the interface dimensions.
ELECTRICAL	
Frequency Range	DC - 8.0 GHz min.
Insulation Resistance	The insulation resistance shall not be less than 5.000 megohms.
Voltage Standing Wave Ratio (VSWR)	1.06 + .005 x f (GHz)
Contact Resistance	The center contact resistance drop shall not exceed 0,8 milliohms and the outer contact resistance drop shall not exceed 1.5 milliohms.
Dielectric Withstanding Voltage	The magnitude of the test voltage shall be 4,000 volts rms at sea level.
RF High Potential Withstanding Voltage	The RF high potential withstanding voltage is 2,500 volts rms at 5 MHz. Leakage is not applicable.
RF Leakage	RF Leakage is not applicable
Insertion Loss	(.05 SQT(f(GHz))) dB
MECHANICAL	
Connector Durability	The connector is to be tested and its mating connector shall be subjected to 5000 insertions. Withdrawal cycles not applicable. The connector shall show no evidence of mechanical failure and the connector shall meet the mating characteristic requirements.
Cable Retention Force	Cable Retention Force is not applicable.
Coupling Nut Retention Force	Coupling Nut Retention Force is not applicable.
Force to Engage and Disengage	Force to engage and disengage is not applicable.
Longitudinal Force max.	Longitudinal force is not applicable.
Mating Characteristics	Mating Characteristics are not applicable
Recommended Mating Torque	Recommended Mating Torque is not applicable.
ENVIRONMENTAL	
Corrosion (Salt Spray)	Specification MIL-STD-202, Method 101, Test Condition B. The salt solution shall be 5%.
Vibration	Specification MIL-STD-202, Method 204, Test Condition B.
Shock	Specification MIL-STD-202, Method 213, Test Condition 1.
Thermal Shock	Specification MIL-STD-202, Method 107, Test Condition B, except high temperature shall be + 200°C.
Moisture Resistance	Specification MIL-STD-202, Method 106. Step 7b (vibration) shall be omitted. Insulation resistance shall be 200 megohms min. within 5 minutes of removal from humidity.
Corona Level	The connector shall not exhibit breakdown (corona) when the applied voltage is 750 volts rms and the altitude is 70,000 feet.

Dimensions shown are Inches over Millimeters or vice versa. Standard units have stainless finish (last 2 digits of the P/N are -02). Interfaces are per DIN 47 223, DIN 47 226, IEC 169-4, IEC 169-7, IEC 169-8, IEC 457-2, IEC 60169-5, IEEE 287, MIL-PRF-39012, MIL DTL-24044, MIL DTL-3643,MIL-STD-348B, where applicable

Spectrum Elektrotechnik GmbH
Germany
www.spectrum-et.com
sales@spectrum-et.com
Phone: +49 / 89 / 35 48 04 0
Fax: +49 / 89 / 35 48 04 90

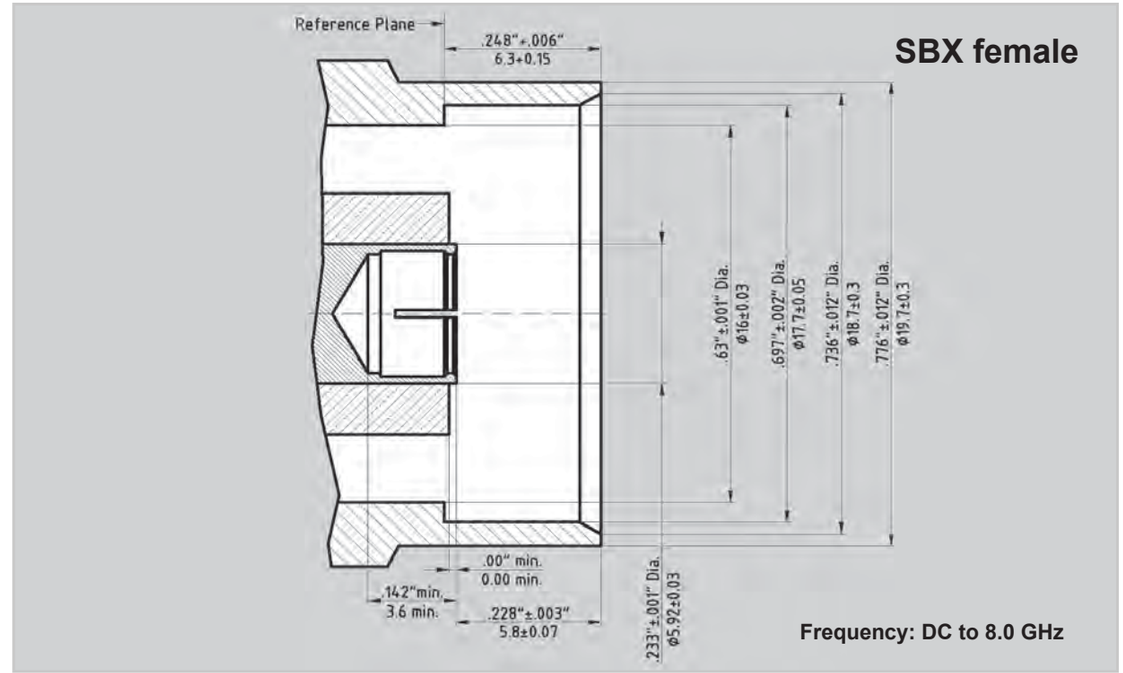

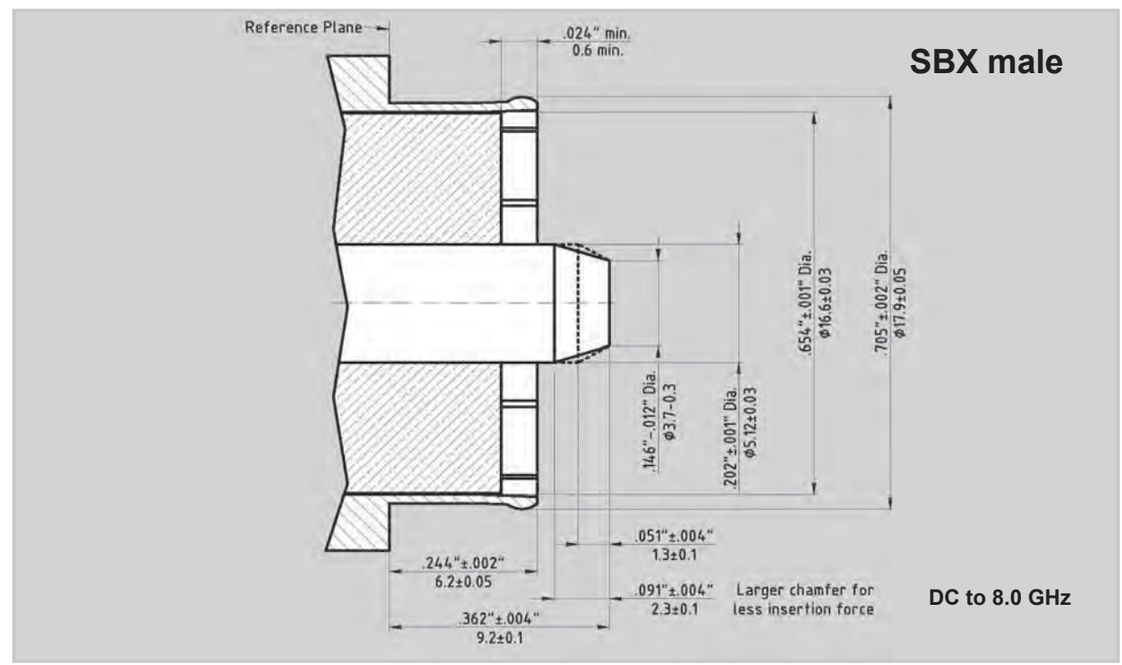

Dimensions shown are Inches over Millimeters or vice versa. Standard units have stainless finish (last 2 digits of the P/N are -02). Interfaces are per DIN 47 223, DIN 47 226, IEC 169-4, IEC 169-7, IEC 169-8, IEC 457-2, IEC 60169-5, IEEE 287, MIL-PRF-39012, MIL DTL-24044, MIL DTL-3643,MIL-STD-348B, where applicable

Spectrum Elektrotechnik GmbH
Germany
www.spectrum-et.com
sales@spectrum-et.com
Phone: +49 / 89 / 35 48 04 0
Fax: +49 / 89 / 35 48 04 90

Part - No.	8001-XF76-02
Connectors	SBX-fem. to 7/16-fem.
Frequency	DC - 7.5 GHz
VSWR max.	1.06 + 0.005 x f(GHz)

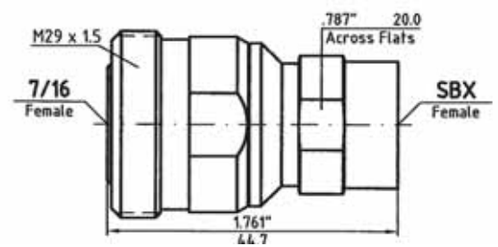

Part - No.	8002-XM76-02
Connectors	SBX-male to 7/16-fem.
Frequency	DC - 7.5 GHz
VSWR max.	1.06 + 0.005 x f(GHz)

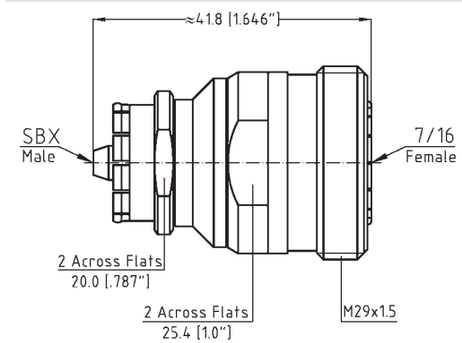

Part - No.	8003-XM76-02
Connectors	SBX-male to 7/16-fem.
Frequency	DC - 7.5 GHz
VSWR max.	1.06 + 0.005 x f(GHz)

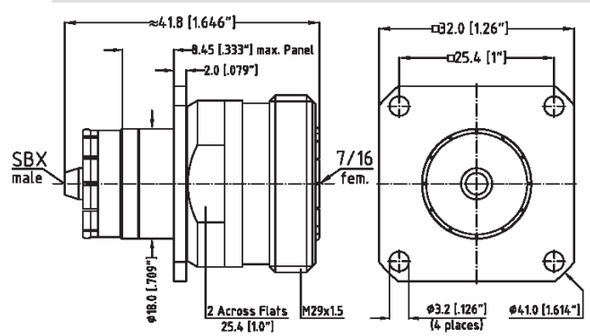

Part - No.	8001-XF75-02
Connectors	SBX-fem. to 7/16-male
Frequency	DC - 7.5 GHz
VSWR max.	1.06 + 0.005 x f(GHz)

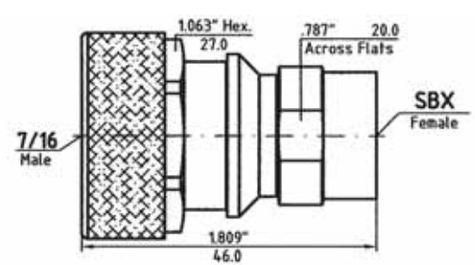

Dimensions shown are Inches over Millimeters or vice versa. Standard units have stainless finish (last 2 digits of the P/N are -02). Interfaces are per DIN 47 223, DIN 47 226, IEC 169-4, IEC 169-7, IEC 169-8, IEC 457-2, IEC 60169-5, IEEE 287, MIL-PRF-39012, MIL DTL-24044, MIL DTL-3643,MIL-STD-348B, where applicable

Spectrum Elektrotechnik GmbH
Germany
www.spectrum-et.com
sales@spectrum-et.com
Phone: +49 / 89 / 35 48 04 0
Fax: +49 / 89 / 35 48 04 90

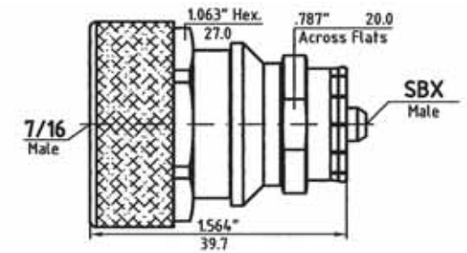

Part - No.	8001-XM75-02
Connectors	SBX-male to 7/16-male
Frequency	DC - 7.5 GHz
VSWR max.	1.06 + 0.005 x f(GHz)

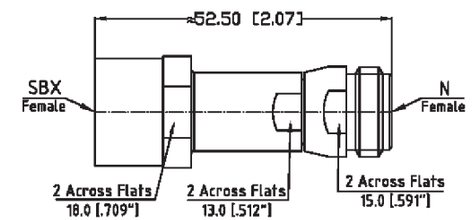

Part - No.	8001-XF61-02
Connectors	SBX-fem. to N-fem.
Frequency	DC - 8.0 GHz
VSWR max.	1.06 + 0.005 x f(GHz)

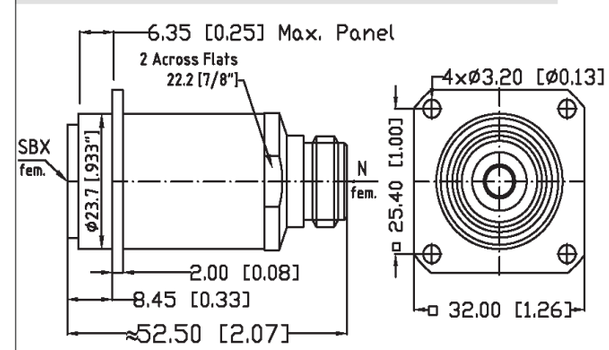

Part - No.	8002-XF61-02
Connectors	SBX-fem. to N-fem.
Frequency	DC - 8.0 GHz
VSWR max.	1.06 + 0.005 x f(GHz)

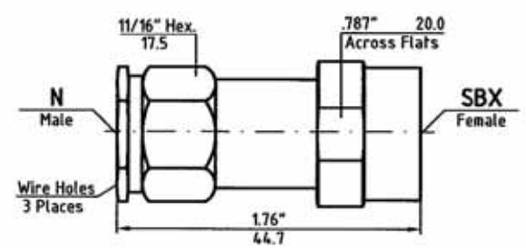

Part - No.	8001-XF51-02
Connectors	SBX-fem. to N-male
Frequency	DC - 8.0 GHz
VSWR max.	1.06 + 0.005 x f(GHz)

Dimensions shown are Inches over Millimeters or vice versa. Standard units have stainless finish (last 2 digits of the P/N are -02). Interfaces are per DIN 47 223, DIN 47 226, IEC 169-4, IEC 169-7, IEC 169-8, IEC 457-2, IEC 60169-5, IEEE 287, MIL-PRF-39012, MIL DTL-24044, MIL DTL-3643,MIL-STD-348B, where applicable

Spectrum Elektrotechnik GmbH
Germany
www.spectrum-et.com
sales@spectrum-et.com
Phone: +49 / 89 / 35 48 04 0
Fax: +49 / 89 / 35 48 04 90

Part - No.	8001-XM61-02
Connectors	SBX-male to N-fem.
Frequency	DC - 8.0 GHz
VSWR max.	1.06 + 0.005 x f(GHz)

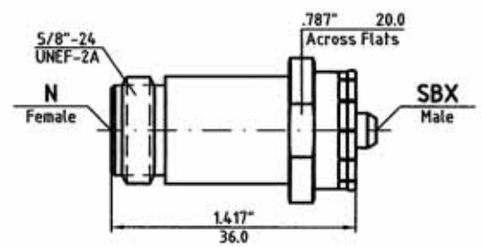

Part - No.	8002-XM61-02
Connectors	SBX-male to N-fem.
Frequency	DC - 8.0 GHz
VSWR max.	1.06 + 0.005 x f(GHz)

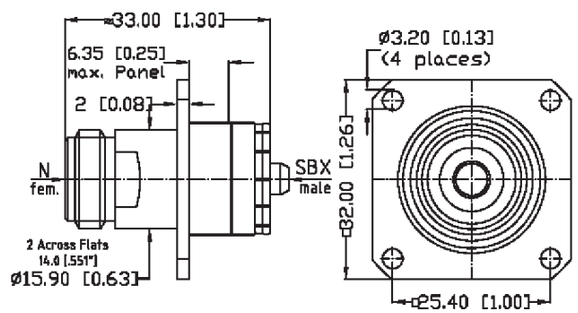

Part - No.	8001-XM51-02
Connectors	SBX-male to N-male
Frequency	DC - 8.0 GHz
VSWR max.	1.06 + 0.005 x f(GHz)

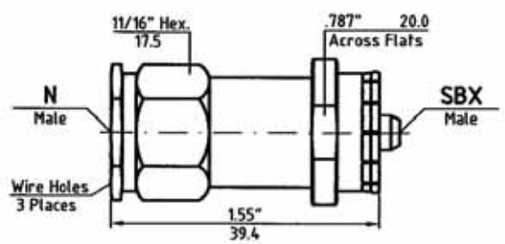

Part - No.	8001-XMNN-02
Connectors	SBX-male to N-Push-On-male
Frequency	DC - 8.0 GHz
VSWR max.	1.06 + 0.005 x f(GHz)

SBX male to N male PUSH-ON

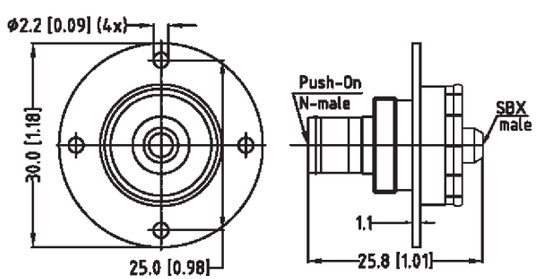

Dimensions shown are Inches over Millimeters or vice versa. Standard units have stainless finish (last 2 digits of the P/N are -02). Interfaces are per DIN 47 223, DIN 47 226, IEC 169-4, IEC 169-7, IEC 169-8, IEC 457-2, IEC 60169-5, IEEE 287, MIL-PRF-39012, MIL DTL-24044, MIL DTL-3643,MIL-STD-348B, where applicable

Spectrum Elektrotechnik GmbH
Germany
www.spectrum-et.com
sales@spectrum-et.com
Phone: +49 / 89 / 35 48 04 0
Fax: +49 / 89 / 35 48 04 90

Part - No.	8001-XMS1-02
Connectors	SBX-male to special design
Frequency	DC - 8.0 GHz
VSWR max.	1.06 + 0.005 x f(GHz)

Special design for a special customer

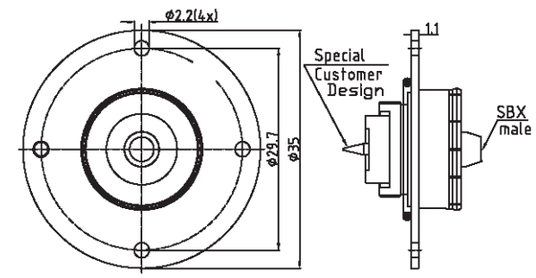

Part - No.	8001-XF21-02
Connectors	SBX-fem. to SMA.fem.
Frequency	DC - 8.0 GHz
VSWR max.	1.06 + 0.005 x f(GHz)

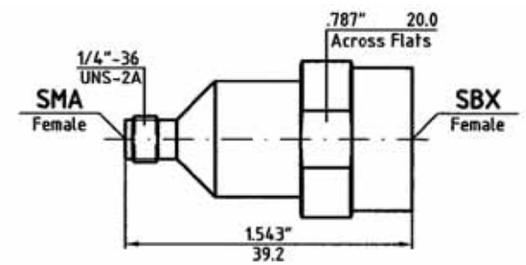

Part - No.	8002-XF21-02
Connectors	SBX-fem. to SMA-fem.
Frequency	DC - 8.0 GHz
VSWR max.	1.06 + 0.005 x f(GHz)

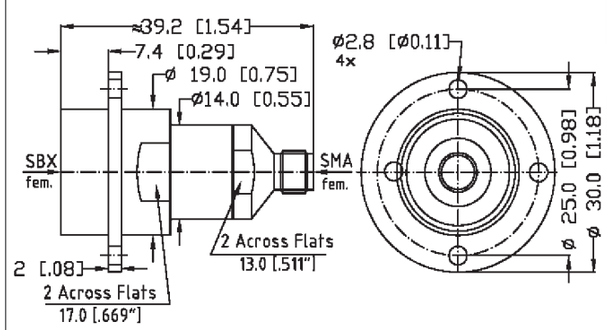

Part - No.	8001-XF11-02
Connectors	SBX-fem. to SMA-male
Frequency	DC - 8.0 GHz
VSWR max.	1.06 + 0.005 x f(GHz)

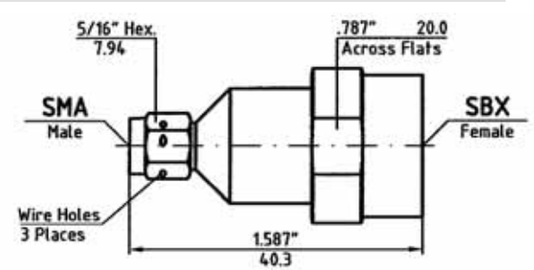

Dimensions shown are Inches over Millimeters or vice versa. Standard units have stainless finish (last 2 digits of the P/N are -02). Interfaces are per DIN 47 223, DIN 47 226, IEC 169-4, IEC 169-7, IEC 169-8, IEC 457-2, IEC 60169-5, IEEE 287, MIL-PRF-39012, MIL DTL-24044, MIL DTL-3643,MIL-STD-348B, where applicable

Spectrum Elektrotechnik GmbH
Germany
www.spectrum-et.com
sales@spectrum-et.com
Phone: +49 / 89 / 35 48 04 0
Fax: +49 / 89 / 35 48 04 90

Part - No.	8001-XM11-02
Connectors	SBX-male to SMA-male
Frequency	DC - 8.0 GHz
VSWR max.	1.06 + 0.005 x f(GHz)

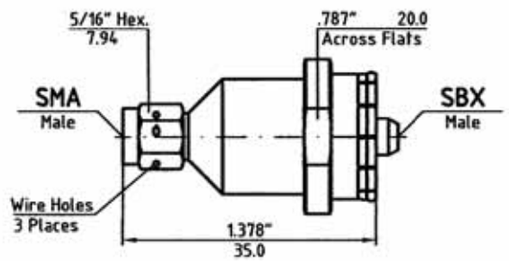

Part - No.	8001-XM21-02
Connectors	SBX-male to SMA-fem.
Frequency	DC - 8.0 GHz
VSWR max.	1.06 + 0.005 x f(GHz)

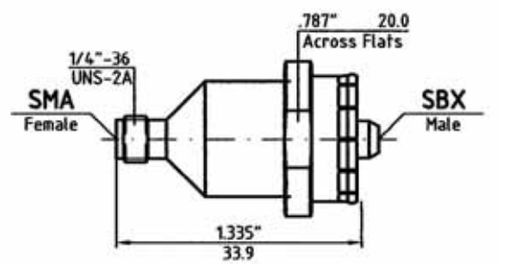

Dimensions shown are Inches over Millimeters or vice versa. Standard units have stainless finish (last 2 digits of the P/N are -02). Interfaces are per DIN 47 223, DIN 47 226, IEC 169-4, IEC 169-7, IEC 169-8, IEC 457-2, IEC 60169-5, IEEE 287, MIL-PRF-39012, MIL DTL-24044, MIL DTL-3643,MIL-STD-348B, where applicable

Spectrum Elektrotechnik GmbH
Germany
www.spectrum-et.com
sales@spectrum-et.com
Phone: +49 / 89 / 35 48 04 0
Fax: +49 / 89 / 35 48 04 90

In-Series and Between-Series Adapters SBY

If your choice of SBY Adapter is not shown in this section, please refer to the Table below to determine other possible locations. Should you not find your adapter listed in any section, please consult the factory or your Spectrum Elektrotechnik Area Representative.

SBY	Section	Page
SBY Overview & Specifications	M	1
Between Series SBY to 7/16		4
Between Series SBY to N		5
Between Series SBY to SMA		7

Although our catalog incorporates a very comprehensive range of products, due to our program of continuous development, there is no way that it will contain every product we manufacture. Please consult the factory for the product you require.
To improve our Standard Products we reserve the right to make changes. Specifications are therefore subject to change without notice.

Dimensions shown are Inches over Millimeters or vice versa. Standard units have stainless finish (last 2 digits of the P/N are -02). Interfaces are per DIN 47 223, DIN 47 226, IEC 169-4, IEC 169-7, IEC 169-8, IEC 457-2, IEC 60169-5, IEEE 287, MIL-PRF-39012, MIL DTL-24044, MIL DTL-3643,MIL-STD-348B, where applicable

Spectrum Elektrotechnik GmbH
Germany
www.spectrum-et.com
sales@spectrum-et.com
Phone: +49 / 89 / 35 48 04 0
Fax: +49 / 89 / 35 48 04 90

SBY Specifications

The specifications below are general specifications for all SBY connectors. Specific Data for VSWR, Insertion loss, R.F. leakage etc., are available from the factory upon request. Specifications in the following table are recommended for any procurement documents or drawings. In the event of any conflict between these specifications and other documentation, these specifications shall govern. These specifications are subject to change according to the latest revision.

REQUIREMENT	GENERAL SPECIFICATIONS
Standard Materials	STEEL corrosion resistant 1.4305 per DIN EN 10088; ASTM-A582 (303), or 1.4404 (316L) respectively. ALUMINUM AlMg4.5Mn per DIN DIN EN 1706, AlMgSi0.5 per DIN EN 1706, AlMgSi1 per DIN EN 1706 (6061-T6 per QQ-A-225/8). BRASS CuZn39Pb3 per DIN 17660 (QQ-B-626 (ASTM-B124), half hard). COPPER BERYLLIUM 33-25 CuBe2PbH per DIN17666(DIN CEN/TS;DIN SPEC 9700)(QQ-C530). TFE Fluorocarbon per DIN 52900 (ASTM-D-1710) SILICONE RUBBER per DIN ISO 3601)(A-A-59588,Class IIB) Gr. 50 - 75. BORIUM NITRITE Dielectric for high power applications per in-house specification
Finish for COPPER BERYLLIUM STAINLESS STEEL ALUMINUM BRASS VARIOUS	Center Contacts shall be gold plated to a minimum thickness of .00005-inch in accordance with ASTM-B-488, Type III, Code C, Class 1.25 shall be passivated per ASTM-A967 Conductive Parts shall have an iridited finish per MIL-DTL-5541 Other parts, such as Coupling Nuts and Back-Bodies shall be anodized per MIL-A-8625. .00003 inch (0.8 µm) min. gold plating per MIL-DTL-45204, or nickel plating per QQ-N-290, as specified. Imoloy .0001 inch (2.5 µm) min. plating, consisting of 55% Copper / 20% Zinc / 25% Tin (on special request).
Design	The design shall be such that the outline dimensions in this catalog are met. In addition, the assembled connector shall meet the interface dimensions.
ELECTRICAL	
Frequency Range	DC - 12.0 GHz min.
Insulation Resistance	The insulation resistance shall not be less than 5.000 megohms.
Voltage Standing Wave Ratio (VSWR)	1.06 + .005 x f (GHz)
Contact Resistance	The center contact resistance drop shall not exceed 1.0 milliohms and the outer contact resistance drop shall not exceed 1.5 milliohms.
Dielectric Withstanding Voltage	The magnitude of the test voltage shall be 2.300 volts rms at sea level.
RF High Potential Withstanding Voltage	The RF high potential withstanding voltage is 1.300 volts rms at 5 MHz. Leakage is not applicable.
RF Leakage	RF Leakage is not applicable
Insertion Loss	(.05 SQT(f(GHz))) dB
MECHANICAL	
Connector Durability	The connector is to be tested and its mating connector shall be subjected to 5000 insertions. Withdrawal cycles not applicable. The connector shall show no evidence of mechanical failure and the connector shall meet the mating characteristic requirements.
Cable Retention Force	Cable Retention Force is not applicable.
Coupling Nut Retention Force	Coupling Nut Retention Force is not applicable.
Force to Engage and Disengage	Force to engage and disengage is not applicable.
Longitudinal Force max.	Longitudinal force is not applicable.
Mating Characteristics	Mating Characteristics are not applicable
Recommended Mating Torque	Recommended Mating Torque is not applicable.
ENVIRONMENTAL	
Corrosion (Salt Spray)	Specification MIL-STD-202, Method 101, Test Condition B. The salt solution shall be 5%.
Vibration	Specification MIL-STD-202, Method 204, Test Condition B.
Shock	Specification MIL-STD-202, Method 213, Test Condition I.
Thermal Shock	Specification MIL-STD-202, Method 107, Test Condition B, except high temperature shall be + 200°C.
Moisture Resistance	Specification MIL-STD-202, Method 106. Step 7b (vibration) shall be omitted. Insulation resistance shall be 200 megohms min. within 5 minutes of removal from humidity.
Corona Level	The connector shall not exhibit breakdown (corona) when the applied voltage is 2800 volts rms and the altitude is 0 feet.

Dimensions shown are Inches over Millimeters or vice versa. Standard units have stainless finish (last 2 digits of the P/N are -02). Interfaces are per DIN 47 223, DIN 47 226, IEC 169-4, IEC 169-7, IEC 169-8, IEC 457-2, IEC 60169-5, IEEE 287, MIL-PRF-39012, MIL DTL-24044, MIL DTL-3643,MIL-STD-348B, where applicable

Spectrum Elektrotechnik GmbH
Germany
www.spectrum-et.com
sales@spectrum-et.com
Phone: +49 / 89 / 35 48 04 0
Fax: +49 / 89 / 35 48 04 90

Interface Mating Dimensions SBY

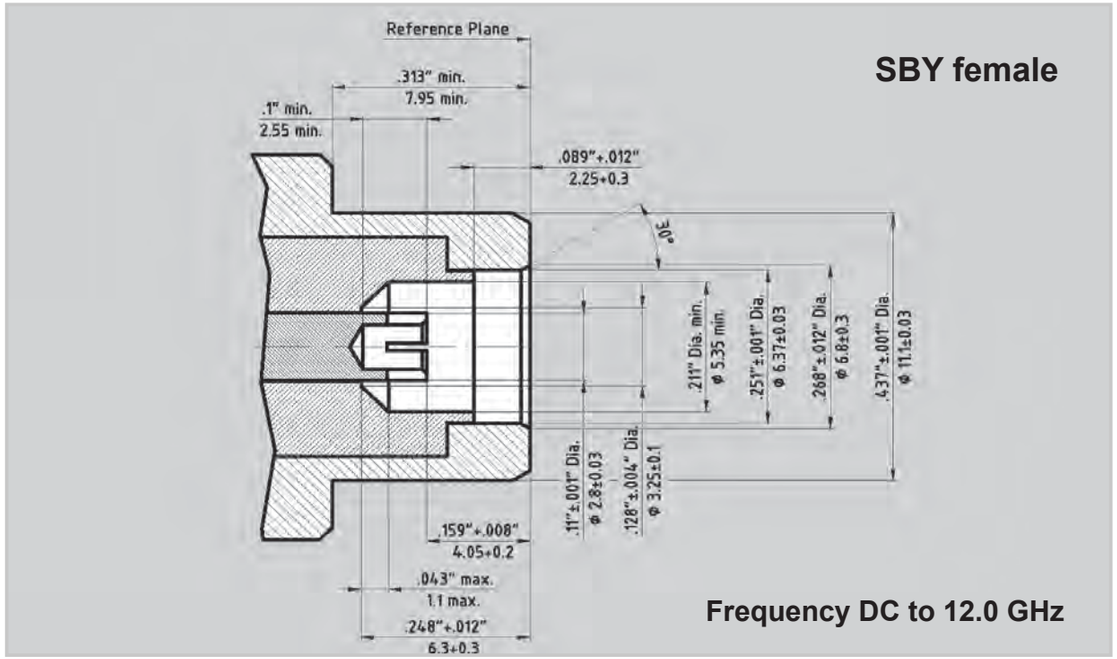

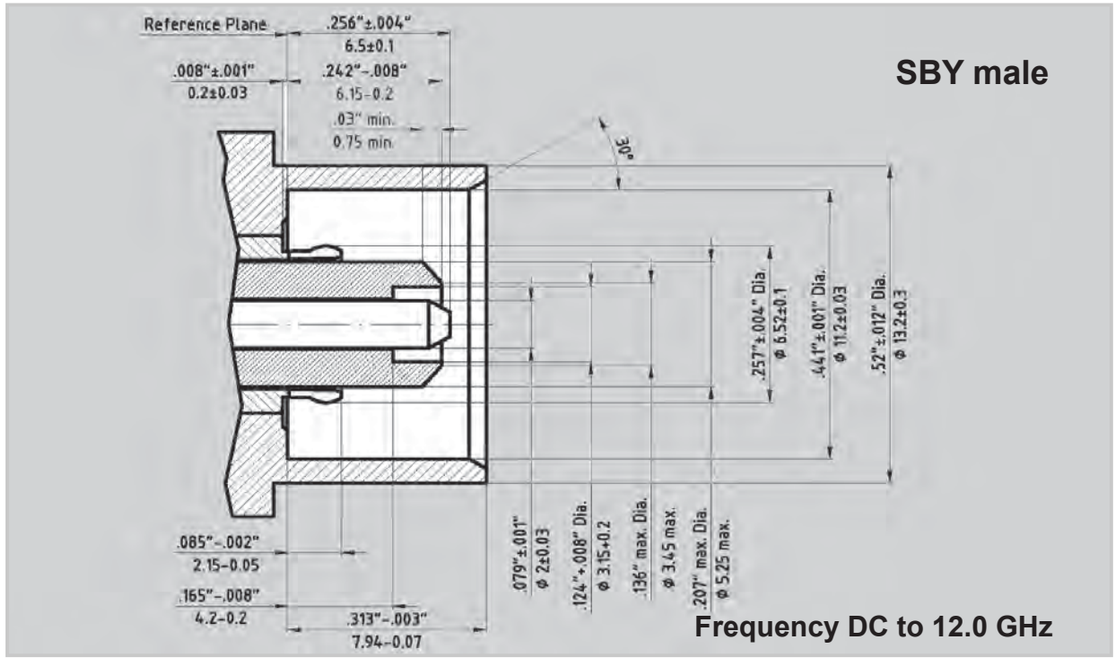

Dimensions shown are Inches over Millimeters or vice versa. Standard units have stainless finish (last 2 digits of the P/N are -02). Interfaces are per DIN 47 223, DIN 47 226, IEC 169-4, IEC 169-7, IEC 169-8, IEC 457-2, IEC 60169-5, IEEE 287, MIL-PRF-39012, MIL DTL-24044, MIL DTL-3643,MIL-STD-348B, where applicable

Spectrum Elektrotechnik GmbH
Germany
www.spectrum-et.com
sales@spectrum-et.com
Phone: +49 / 89 / 35 48 04 0
Fax: +49 / 89 / 35 48 04 90

Part - No.	8001-YF76-02
Connectors	SBY-fem. to 7/16-fem.
Frequency	DC - 7.5 GHz
VSWR max.	1.06 + 0.005 x f(GHz)

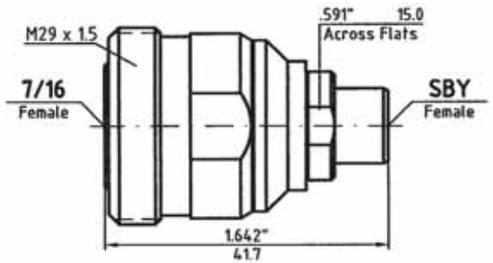

Part - No.	8001-YM76-02
Connectors	SBY-male to 7/16-fem.
Frequency	DC - 7.5 GHz
VSWR max.	1.06 + 0.005 x f(GHz)

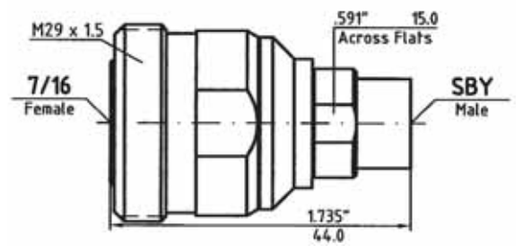

Part - No.	8001-YF75-02
Connectors	SBY-fem. to 7/16-male
Frequency	DC - 7.5 GHz
VSWR max.	1.06 + 0.005 x f(GHz)

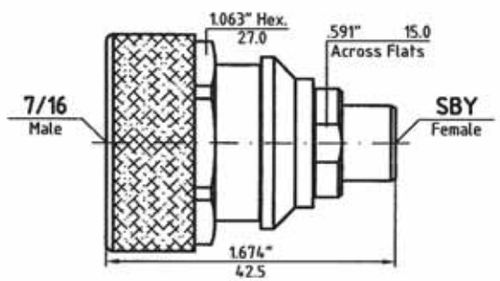

Part - No.	8001-YM75-02
Connectors	SBY-male to 7/16-male
Frequency	DC - 7.5 GHz
VSWR max.	1.06 + 0.005 x f(GHz)

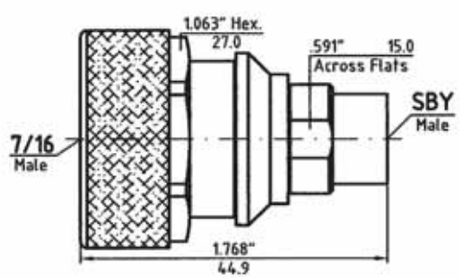

Dimensions shown are Inches over Millimeters or vice versa. Standard units have stainless finish (last 2 digits of the P/N are -02). Interfaces are per DIN 47 223, DIN 47 226, IEC 169-4, IEC 169-7, IEC 169-8, IEC 457-2, IEC 60169-5, IEEE 287, MIL-PRF-39012, MIL DTL-24044, MIL DTL-3643,MIL-STD-348B, where applicable

Spectrum Elektrotechnik GmbH
Germany
www.spectrum-et.com
sales@spectrum-et.com
Phone: +49 / 89 / 35 48 04 0
Fax: +49 / 89 / 35 48 04 90

Part - No.	8001-YF61-02
Connectors	SBY-fem. to N-fem.
Frequency	DC - 12.0 GHz
VSWR max.	1.06 + 0.005 x f(GHz)

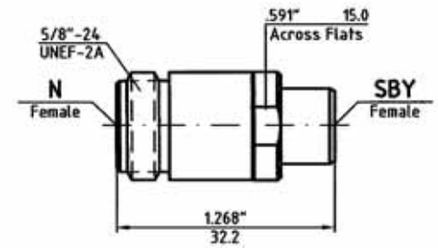

Part - No.	8002-YF61-02
Connectors	SBY-fem. to N-fem.
Frequency	DC - 12.0 GHz
VSWR max.	1.06 + 0.005 x f(GHz)

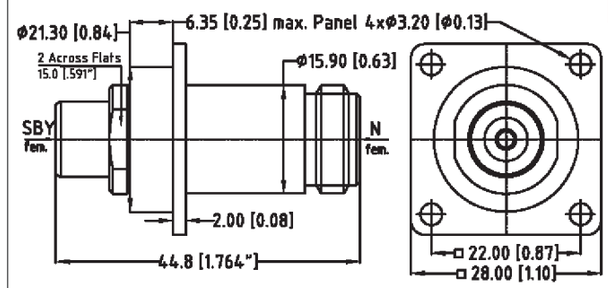

Part - No.	8001-YF51-02
Connectors	SBY-fem. to N-male
Frequency	DC - 12.0 GHz
VSWR max.	1.06 + 0.005 x f(GHz)

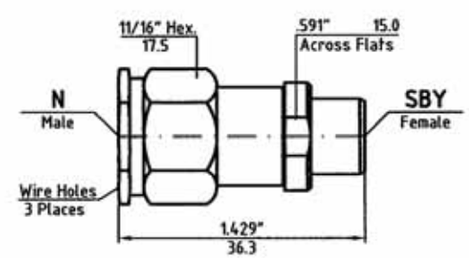

Part - No.	8001-YM61-02
Connectors	SBY-male to N-fem.
Frequency	DC - 12.0 GHz
VSWR max.	1.06 + 0.005 x f(GHz)

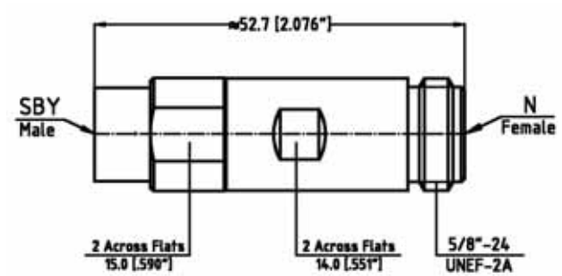

Dimensions shown are Inches over Millimeters or vice versa. Standard units have stainless finish (last 2 digits of the P/N are -02). Interfaces are per DIN 47 223, DIN 47 226, IEC 169-4, IEC 169-7, IEC 169-8, IEC 457-2, IEC 60169-5, IEEE 287, MIL-PRF-39012, MIL DTL-24044, MIL DTL-3643,MIL-STD-348B, where applicable

Spectrum Elektrotechnik GmbH
Germany
www.spectrum-et.com
sales@spectrum-et.com
Phone: +49 / 89 / 35 48 04 0
Fax: +49 / 89 / 35 48 04 90

Between-Series Adapters SBY to N

Part - No.	8001-YM51-02
Connectors	SBY-male to N-male
Frequency	DC - 12.0 GHz
VSWR max.	1.06 + 0.005 x f(GHz)

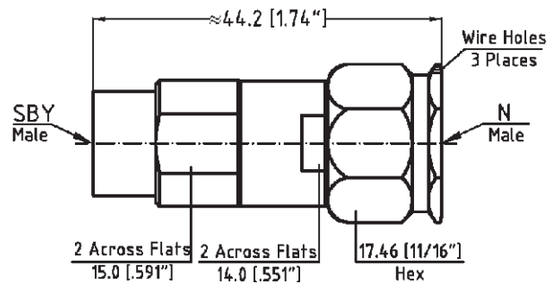

Part - No.	8002-YM61-02
Connectors	SBY-male to N-female
Frequency	DC - 12.0 GHz
VSWR max.	1.06 + 0.005 x f(GHz)

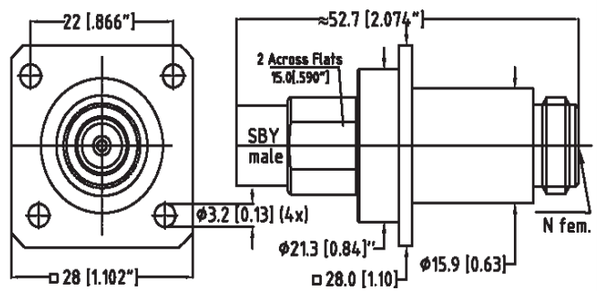

Dimensions shown are Inches over Millimeters or vice versa. Standard units have stainless finish (last 2 digits of the P/N are -02). Interfaces are per DIN 47 223, DIN 47 226, IEC 169-4, IEC 169-7, IEC 169-8, IEC 457-2, IEC 60169-5, IEEE 287, MIL-PRF-39012, MIL DTL-24044, MIL DTL-3643,MIL-STD-348B, where applicable

Spectrum Elektrotechnik GmbH
Germany
www.spectrum-et.com
sales@spectrum-et.com
Phone: +49 / 89 / 35 48 04 0
Fax: +49 / 89 / 35 48 04 90

Between-Series Adapters SBY to SMA

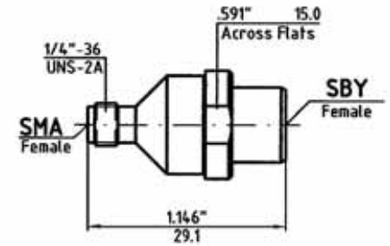

Part - No.	8001-YF21-02
Connectors	SBY-fem. to SMA-fem.
Frequency	DC - 12.0 GHz
VSWR max.	1.06 + 0.005 x f(GHz)

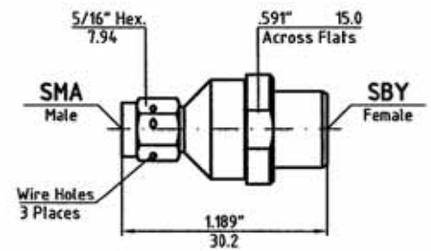

Part - No.	8001-YF11-02
Connectors	SBY-fem. to SMA-male
Frequency	DC - 12.0 GHz
VSWR max.	1.06 + 0.005 x f(GHz)

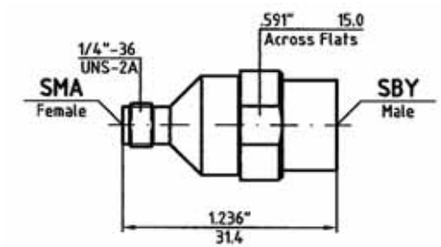

Part - No.	8001-YM21-02
Connectors	SBY-male to SMA-fem.
Frequency	DC - 12.0 GHz
VSWR max.	1.06 + 0.005 x f(GHz)

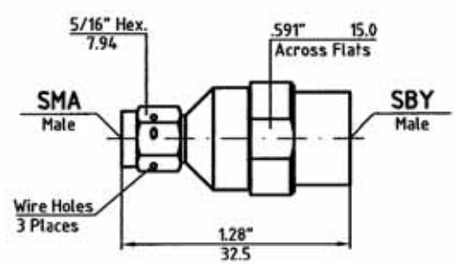

Part - No.	8001-YM11-02
Connectors	SBY-male to SMA-male
Frequency	DC - 12.0 GHz
VSWR max.	1.06 + 0.005 x f(GHz)

Dimensions shown are Inches over Millimeters or vice versa. Standard units have stainless finish (last 2 digits of the P/N are -02). Interfaces are per DIN 47 223, DIN 47 226, IEC 169-4, IEC 169-7, IEC 169-8, IEC 457-2, IEC 60169-5, IEEE 287, MIL-PRF-39012, MIL DTL-24044, MIL DTL-3643,MIL-STD-348B, where applicable

Spectrum Elektrotechnik GmbH
Germany
www.spectrum-et.com
sales@spectrum-et.com
Phone: +49 / 89 / 35 48 04 0
Fax: +49 / 89 / 35 48 04 90

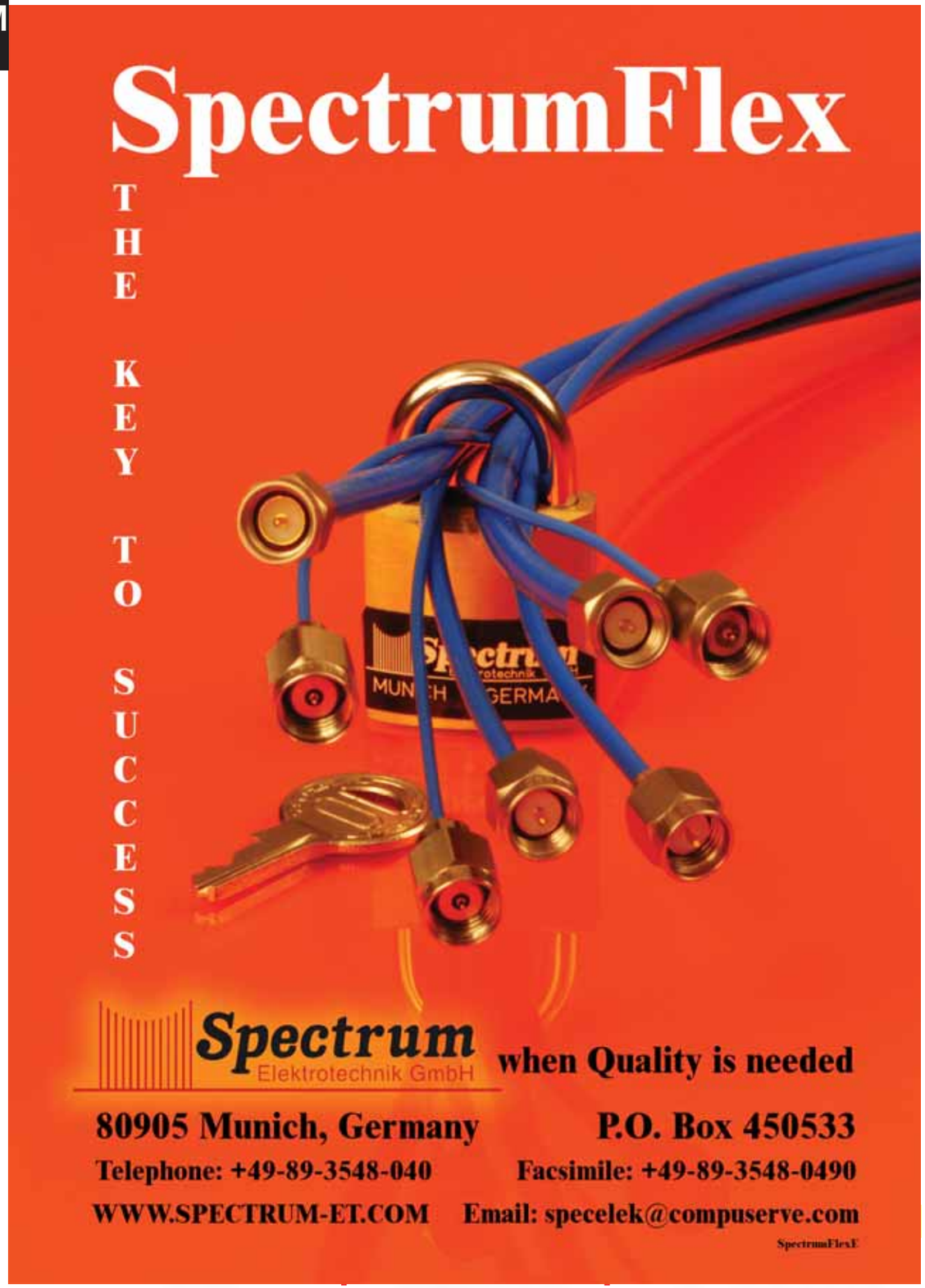

In-Series and Between-Series Adapters SC

If your choice of SC Adapter is not shown in this section, please refer to the Table below to determine other possible locations. Should you not find your adapter listed in any section, please consult the factory or your Spectrum Elektrotechnik Area Representative.

SC	Section	Page
SC Overview & Specifications	N	1
SC In-Series		4
SC In-Series of equal electr. lengths		6
Between Series SC to N		7
Between Series SC to SMA and TNC		10

Although our catalog incorporates a very comprehensive range of products, due to our program of continuous development, there is no way that it will contain every product we manufacture. Please consult the factory for the product you require.
To improve our Standard Products we reserve the right to make changes. Specifications are therefore subject to change without notice.

Dimensions shown are Inches over Millimeters or vice versa. Standard units have stainless finish (last 2 digits of the P/N are -02). Interfaces are per DIN 47 223, DIN 47 226, IEC 169-4, IEC 169-7, IEC 169-8, IEC 457-2, IEC 60169-5, IEEE 287, MIL-PRF-39012, MIL DTL-24044, MIL DTL-3643,MIL-STD-348B, where applicable

SC Specifications to MIL-PRF-39012

N

The specifications below are general specifications for all SC connectors. Specific Data for VSWR, Insertion Loss, R.F. leakage, etc., are available from the factory upon request. Specifications in the following table are recommended for any procurement documents or drawings. In the event of any conflict between these specifications and General Specifications MIL-PRF-39012, these specifications shall govern. These specifications are subject to change according to the latest revision.

REQUIREMENT	GENERAL SPECIFICATIONS
Standard Materials	STEEL corrosion resistant 1.4305 per DIN EN 10088; ASTM-A582 (303), or 1.4404 (316L) respectively. ALUMINUM AlMg4.5Mn per DIN DIN EN 1706, AlMgSi0.5 per DIN EN 1706, AlMgSi1 per DIN EN 1706 (6061-T6 per QQ-A-225/8). BRASS CuZn39Pb3 per DIN 17660 (QQ-B-626 (ASTM-B124), half hard). COPPER BERYLLIUM 33-25 CuBe2PbH per DIN17666(DIN CEN/TS;DIN SPEC 9700)(QQ-C530). TFE Fluorocarbon per DIN 52900 (ASTM-D-1710), or Thermoplast per DIN EN ISO 10350, or PEI per in-house specification respectively for higher temperature applications. SILICONE RUBBER per DIN ISO 3601)(A-A-59588,Class IIB) Gr. 50 - 75. BORIUM NITRITE Dielectric for high power applications per in-house specification
Finish for COPPER BERYLLIUM STAINLESS STEEL ALUMINUM BRASS VARIOUS	Center Contacts shall be gold plated to a minimum thickness of .00005-inch in accordance with ASTM-B-488, Type III, Code C, Class 1.25 shall be passivated per ASTM-A967 Conductive Parts shall have an iridited finish per MIL-DTL-5541 Other parts, such as Coupling Nuts and Back-Bodies shall be anodized per MIL-A-8625. .00003 inch (0.8 µm) min. gold plating per MIL-DTL-45204, or nickel plating per QQ-N-290, as specified. Imoloy .0001 inch (2.5 µm) min. plating, consisting of 55% Copper / 20% Zinc / 25% Tin (on special request).
Design	The design shall be such that the outline dimensions in this catalog are met. In addition, the assembled connector shall meet the interface dimensions.
ELECTRICAL	
Frequency Range	DC 10.0 GHz. min.
Insulation Resistance	The insulation resistance shall not be less than 5,000 megohms.
Voltage Standing Wave Ratio (VSWR)	1.06 + .005 x f (GHz)
Contact Resistance	The center contact resistance drop shall not exceed 1.0 milliohms and the outer contact resistance drop shall not exceed 0.15 milliohms.
Dielectric Withstanding Voltage	The magnitude of the test voltage shall be 3000 volts rms at sea level.
RF High Potential Withstanding Voltage	The RF high potential withstanding voltage is 2,500 volts rms at 5 MHz. Leakage is not applicable.
RF Leakage	- (90 - f (GHz)) dB
Insertion Loss	(.05 SQT(f(GHz))) dB
MECHANICAL	
Connector Durability	The connector is to be tested and its mating connector shall be subjected to 500 insertion and withdrawal cycles at 12 cycles per minute max. The connector shall show no evidence of mechanical failure and the connector shall meet the mating characteristic requirements.
Cable Retention Force	75 pounds (333.6 N) min.
Coupling Nut Retention Force	Not applicable for Female connectors. For male connectors, the axial force is 100 lbs (445 N) min.. The torque is 30 inch-pounds (3.4 Nm) max.
Force to Engage and Disengage	The torque required to engage and disengage shall not exceed 6 inch-pounds (0.678 Nm).
Longitudinal Force max.	Longitudinal force is not applicable.
Mating Characteristics	See interface dimensions shown on next page. Applicable to Females only: oversize pin .098 inch (2.49 mm) min. dia.,.125 inch (3.17 mm) min. deep; insertion force 2 lbs. (8.9 N) max. with .092 inch (2.34 mm) min. dia. pin; withdrawal force 2.00 oz (.556 N) min. with .090 inch (2.29 mm) max. dia. pin.
Recommended Mating Torque	12 - 15 inch-pounds (1.4 - 1.7 Nm)
ENVIRONMENTAL	
Corrosion (Salt Spray)	Specification MIL-STD-202, Method 101, Test Condition B. The salt solution shall be 5%.
Vibration	Specification MIL-STD-202, Method 204, Test Condition B.
Shock	Specification MIL-STD-202, Method 213, Test Condition I.
Thermal Shock	Specification MIL-STD-202, Method 107, Test Condition B, except high temperature shall be + 200°C.
Moisture Resistance	Specification MIL-STD-202, Method 106. Step 7b (vibration) shall be omitted. Insulation resistance shall be 200 megohms min. within 5 minutes of removal from humidity.
Corona Level	The connector shall not exhibit breakdown (corona) when the applied voltage is 750 volts rms and the altitude is 70,000 feet.

Dimensions shown are Inches over Millimeters or vice versa. Standard units have stainless finish (last 2 digits of the P/N are -02). Interfaces are per DIN 47 223, DIN 47 226, IEC 169-4, IEC 169-7, IEC 169-8, IEC 457-2, IEC 60169-5, IEEE 287, MIL-PRF-39012, MIL DTL-24044, MIL DTL-3643,MIL-STD-348B, where applicable

Spectrum Elektrotechnik GmbH
Germany
www.spectrum-et.com
sales@spectrum-et.com
Phone: +49 / 89 / 35 48 04 0
Fax: +49 / 89 / 35 48 04 90

Interface Mating Dimensions SC (Per MIL-STD-348B

N

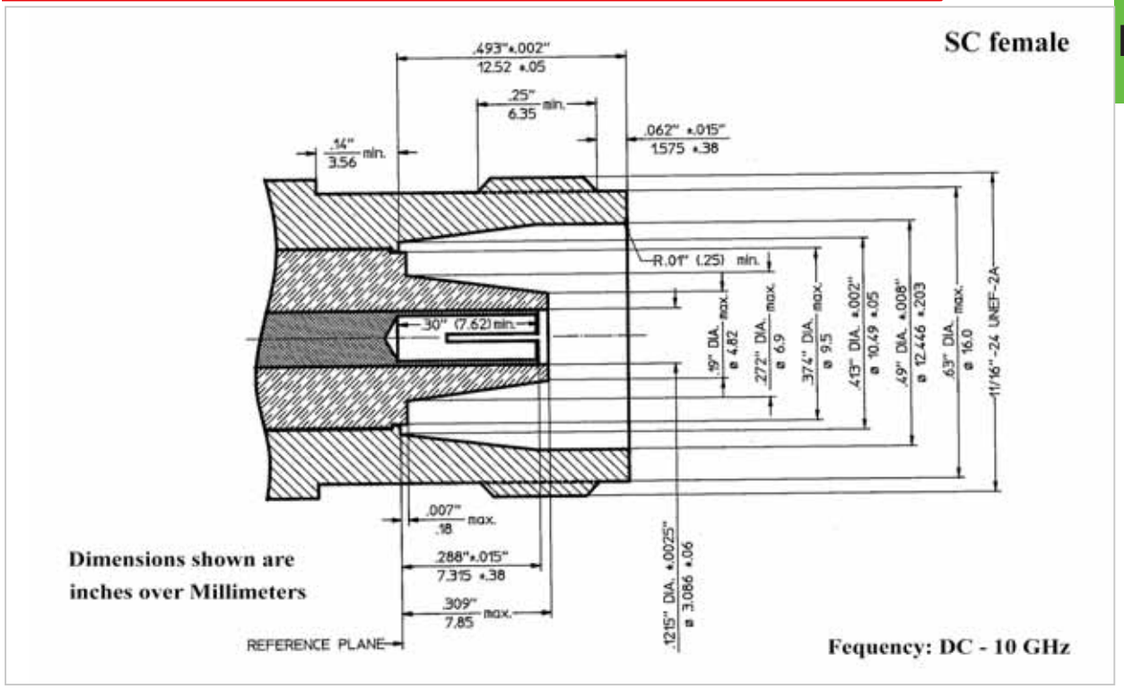

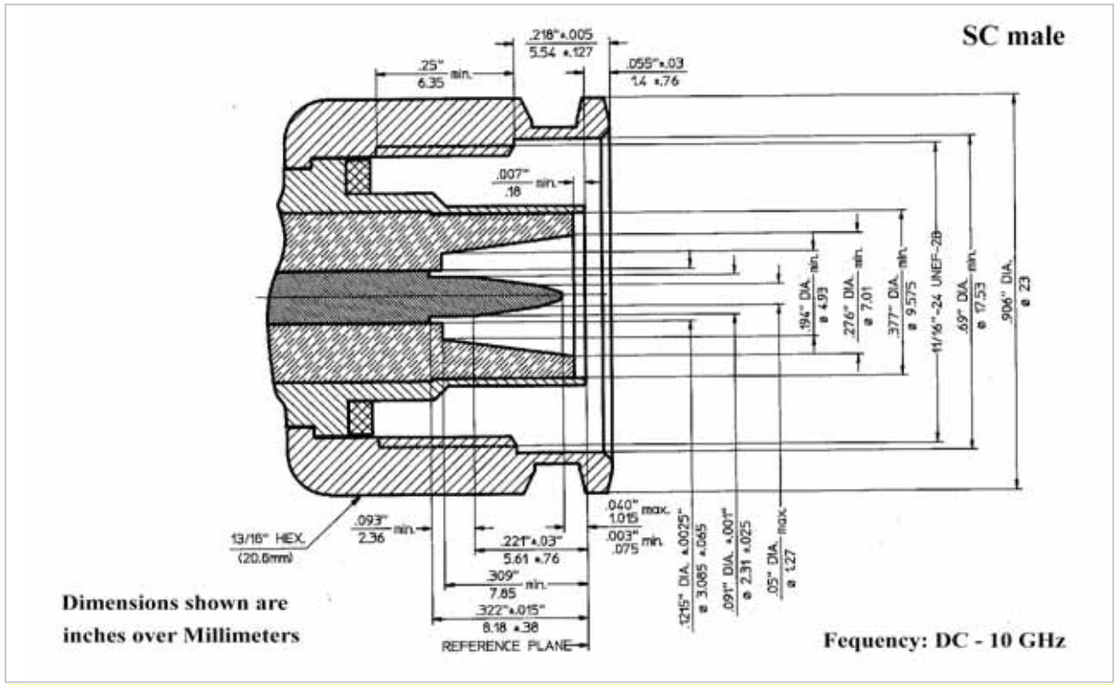

Dimensions shown are Inches over Millimeters or vice versa. Standard units have stainless finish (last 2 digits of the P/N are -02). Interfaces are per DIN 47 223, DIN 47 226, IEC 169-4, IEC 169-7, IEC 169-8, IEC 457-2, IEC 60169-5, IEEE 287, MIL-PRF-39012, MIL DTL-24044, MIL DTL-3643,MIL-STD-348B, where applicable

Spectrum Elektrotechnik GmbH
Germany
www.spectrum-et.com
sales@spectrum-et.com
Phone: +49 / 89 / 35 48 04 0
Fax: +49 / 89 / 35 48 04 90

N

Part - No.	8001-7979-02
Connectors	SC-fem. to SC-fem.
Frequency	DC - 10.0 GHz
VSWR max.	1.06 + 0.005 x f(GHz)

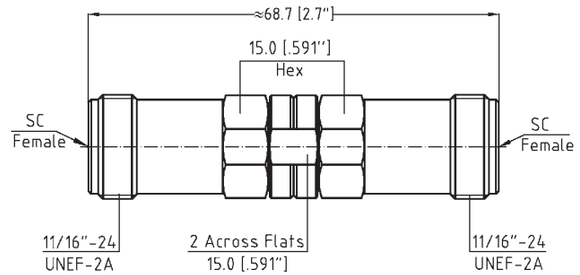

Part - No.	8H01-7979-02
Connectors	SC-fem. to SC-fem.
Frequency	DC - 9.0 GHz
VSWR max.	1.06 + 0.005 x f(GHz)

Flange 25.4mm square, 4 mounting holes of 3.4mm dia. at 18.25mm square

Higher power application

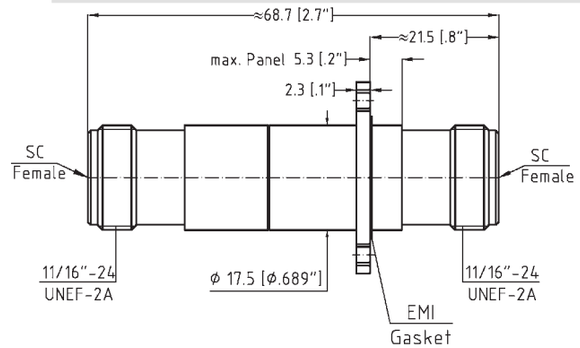

Part - No.	8002-7979-02
Connectors	SC-fem. to SC-fem.
Frequency	DC - 10.0 GHz
VSWR max.	1.06 + 0.005 x f(GHz)

P/N changes to 8004-7979-02 for the unit with EMI gasket, instead of Silicone gasket

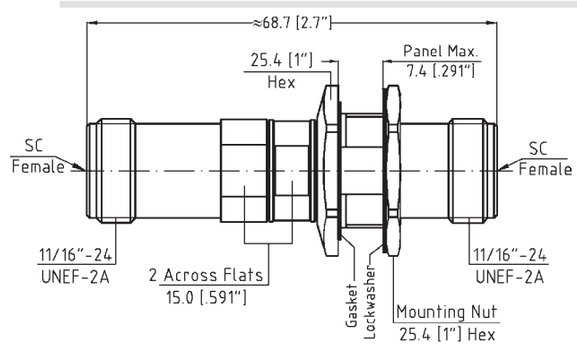

Part - No.	8001-7980-02
Connectors	SC-fem. to SC-male
Frequency	DC - 10.0 GHz
VSWR max.	1.06 + 0.005 x f(GHz)

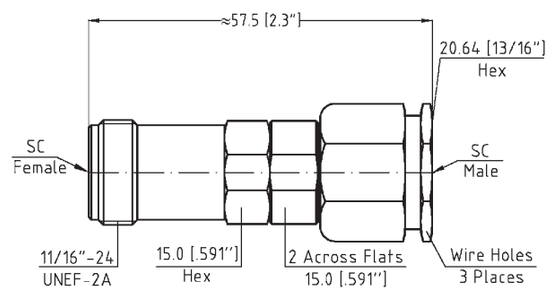

Dimensions shown are Inches over Millimeters or vice versa. Standard units have stainless finish (last 2 digits of the P/N are -02). Interfaces are per DIN 47 223, DIN 47 226, IEC 169-4, IEC 169-7, IEC 169-8, IEC 457-2, IEC 60169-5, IEEE 287, MIL-PRF-39012, MIL DTL-24044, MIL DTL-3643,MIL-STD-348B, where applicable

Spectrum Elektrotechnik GmbH
Germany
www.spectrum-et.com
sales@spectrum-et.com
Phone: +49 / 89 / 35 48 04 0
Fax: +49 / 89 / 35 48 04 90

N

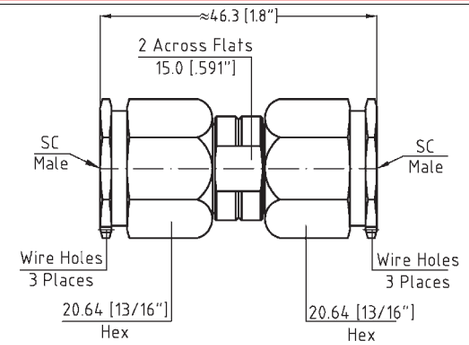

Part - No.	8001-8080-02
Connectors	SC-male to SC-male
Frequency	DC - 10.0 GHz
VSWR max.	1.06 + 0.005 x f(GHz)

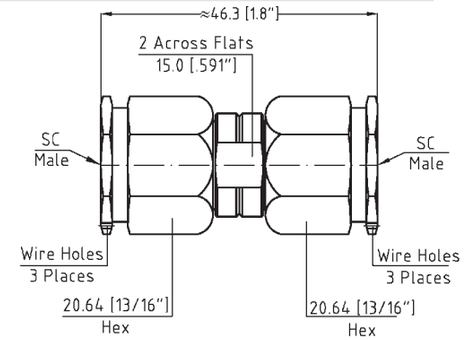

Part - No.	8H01-8080-02
Connectors	SC-male to SC-male
Frequency	DC - 10.0 GHz
VSWR max.	1.06 + 0.005 x f(GHz)

Higher power application

You need something different, or you need technical assistance? Please give us a call for immediate support from Marketing and/or from Engineering.

www.spectrum.et.com

+49-89-3548-040

Dimensions shown are Inches over Millimeters or vice versa. Standard units have stainless finish (last 2 digits of the P/N are -02). Interfaces are per DIN 47 223, DIN 47 226, IEC 169-4, IEC 169-7, IEC 169-8, IEC 457-2, IEC 60169-5, IEEE 287, MIL-PRF-39012, MIL DTL-24044, MIL DTL-3643,MIL-STD-348B, where applicable

Spectrum Elektrotechnik GmbH
Germany
www.spectrum-et.com
sales@spectrum-et.com
Phone: +49 / 89 / 35 48 04 0
Fax: +49 / 89 / 35 48 04 90

N

Part - No.	8801-7979-02
Connectors	SC-fem. to SC-fem.
Frequency	DC - 10.0 GHz
VSWR max.	1.06 + 0.005 x f(GHz)

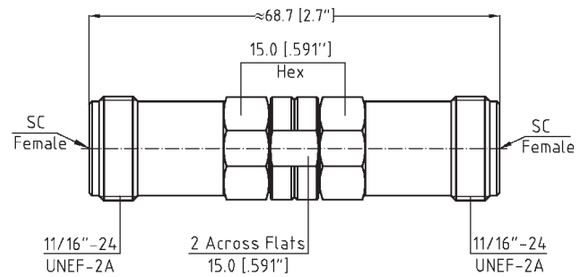

Part - No.	8801-7980-02
Connectors	SC-fem. to SC-male
Frequency	DC - 10.0 GHz
VSWR max.	1.06 + 0.005 x f(GHz)

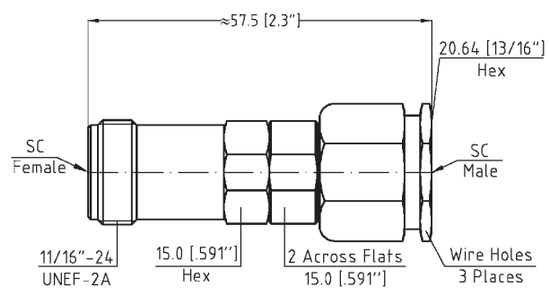

Part - No.	8801-8080-02
Connectors	SC-male to SC-male
Frequency	DC - 10.0 GHz
VSWR max.	1.06 + 0.005 x f(GHz)

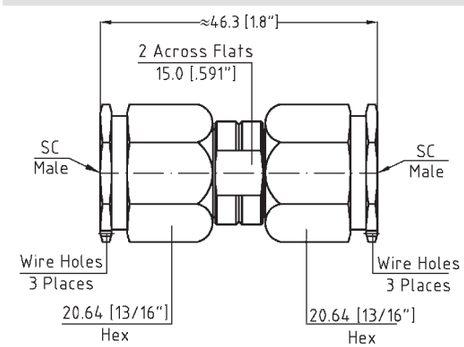

You do not find the Adapter you need for an application? You need technical support? You need price and delivery information? Please contact your nearest Spectrum Representative, or please contact us direct.

Telephone: +49-89-3548-040 Facsimile: +49-89-3548-0490
e-mail: sales@spectrum-et.com www.spectrum-et.com

Dimensions shown are Inches over Millimeters or vice versa. Standard units have stainless finish (last 2 digits of the P/N are -02). Interfaces are per DIN 47 223, DIN 47 226, IEC 169-4, IEC 169-7, IEC 169-8, IEC 457-2, IEC 60169-5, IEEE 287, MIL-PRF-39012, MIL DTL-24044, MIL DTL-3643,MIL-STD-348B, where applicable

N

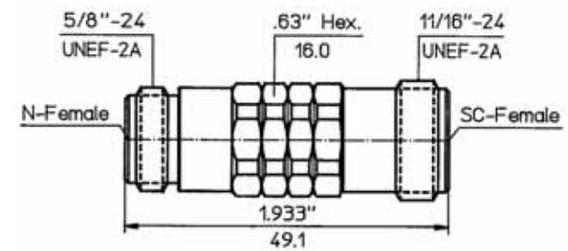

Part - No.	8001-6179-02
Connectors	SC-fem. to N-fem.
Frequency	DC - 10.0 GHz
VSWR max.	1.06 + 0.005 x f(GHz)

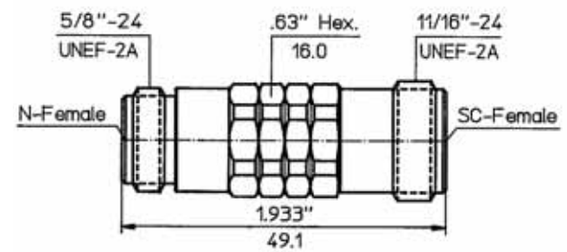

Part - No.	8U01-6179-02
Connectors	SC-fem. to N-fem.
Frequency	DC - 10.0 GHz
VSWR max.	1.06 + 0.005 x f(GHz)

Higher temperature application

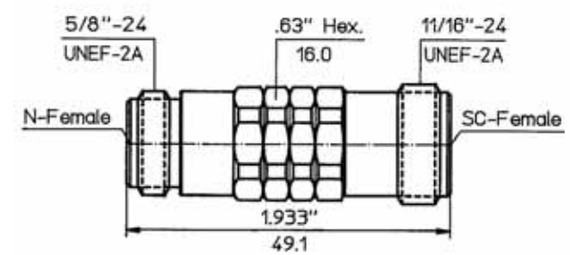

Part - No.	8H01-6179-02
Connectors	SC-fem. to N-fem.
Frequency	DC - 4.0 GHz
VSWR max.	1.06 + 0.005 x f(GHz)

Higher power application

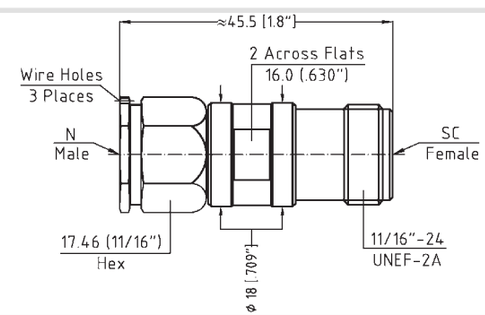

Part - No.	8001-5179-02
Connectors	SC-fem. to N-male
Frequency	DC - 10.0 GHz
VSWR max.	1.06 + 0.005 x f(GHz)

Dimensions shown are Inches over Millimeters or vice versa. Standard units have stainless finish (last 2 digits of the P/N are -02). Interfaces are per DIN 47 223, DIN 47 226, IEC 169-4, IEC 169-7, IEC 169-8, IEC 457-2, IEC 60169-5, IEEE 287, MIL-PRF-39012, MIL DTL-24044, MIL DTL-3643,MIL-STD-348B, where applicable

N

Part - No.	8U01-5179-02
Connectors	SC-fem. to N-male
Frequency	DC - 10.0 GHz
VSWR max.	1.06 + 0.005 x f(GHz)

Higher temperature application

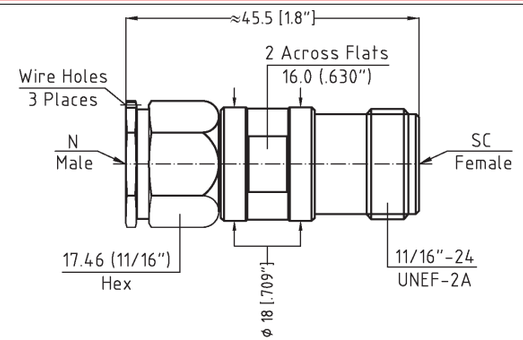

Part - No.	8001-6180-02
Connectors	SC-male to N-fem.
Frequency	DC - 10.0 GHz
VSWR max.	1.06 + 0.005 x f(GHz)

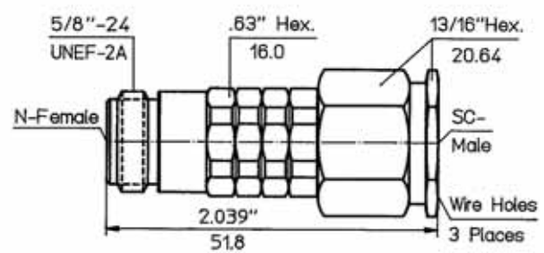

Part - No.	8U01-6180-02
Connectors	SC-male to N-fem.
Frequency	DC - 10.0 GHz
VSWR max.	1.06 + 0.005 x f(GHz)

Higher temperature application

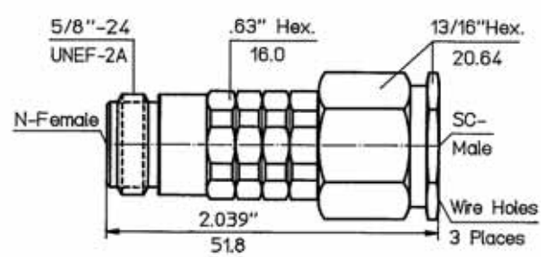

Part - No.	8051-6180-02
Connectors	SC-male to N-fem.
Frequency	DC - 10.0 GHz
VSWR max.	1.06 + 0.005 x f(GHz)

Higher temperature application

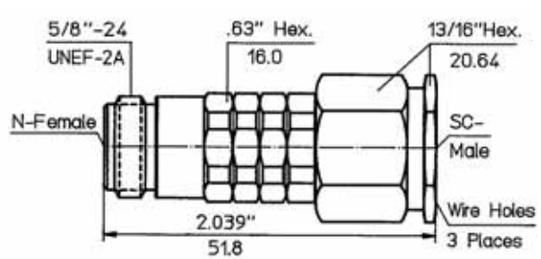

Dimensions shown are Inches over Millimeters or vice versa. Standard units have stainless finish (last 2 digits of the P/N are -02). Interfaces are per DIN 47 223, DIN 47 226, IEC 169-4, IEC 169-7, IEC 169-8, IEC 457-2, IEC 60169-5, IEEE 287, MIL-PRF-39012, MIL DTL-24044, MIL DTL-3643,MIL-STD-348B, where applicable

Spectrum Elektrotechnik GmbH
Germany
www.spectrum-et.com
sales@spectrum-et.com
Phone: +49 / 89 / 35 48 04 0
Fax: +49 / 89 / 35 48 04 90

N

Part - No.	8001-5180-02
Connectors	SC-male to N-male
Frequency	DC - 10.0 GHz
VSWR max.	1.06 + 0.005 x f(GHz)

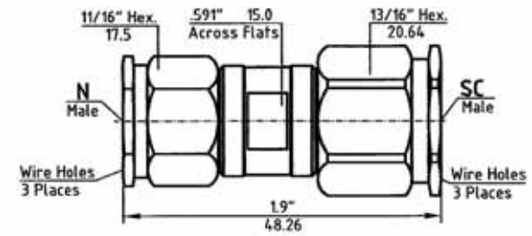

Part - No.	8U01-5180-02
Connectors	SC-male to N-male
Frequency	DC - 10.0 GHz
VSWR max.	1.06 + 0.005 x f(GHz)

Higher temperature application

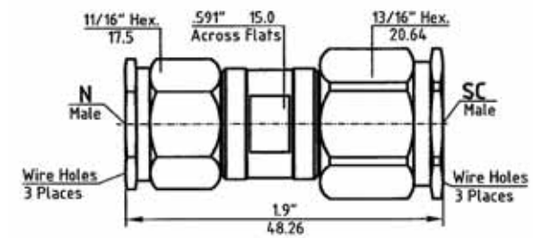

You need something different, or you need technical assistance? Please give us a call for immediate support from Marketing and/or from Engineering, or you may also call your nearest Spectrum Representative.

Dimensions shown are Inches over Millimeters or vice versa. Standard units have stainless finish (last 2 digits of the P/N are -02). Interfaces are per DIN 47 223, DIN 47 226, IEC 169-4, IEC 169-7, IEC 169-8, IEC 457-2, IEC 60169-5, IEEE 287, MIL-PRF-39012, MIL DTL-24044, MIL DTL-3643,MIL-STD-348B, where applicable

Spectrum Elektrotechnik GmbH
Germany
www.spectrum-et.com
sales@spectrum-et.com
Phone: +49 / 89 / 35 48 04 0
Fax: +49 / 89 / 35 48 04 90

N

Part - No.	8001-1179-02
Connectors	SC-fem. to SMA-male
Frequency	DC - 10.0 GHz
VSWR max.	1.06 + 0.005 x f(GHz)

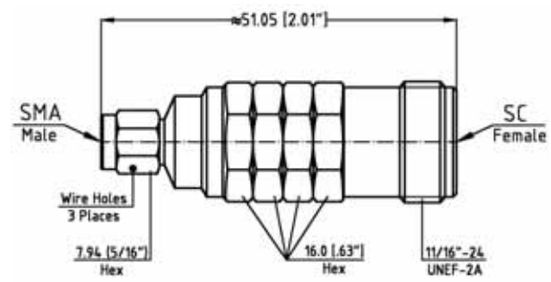

Part - No.	8001-2179-02
Connectors	SC-fem. to SMA-fem.
Frequency	DC - 10.0 GHz
VSWR max.	1.06 + 0.005 x f(GHz)

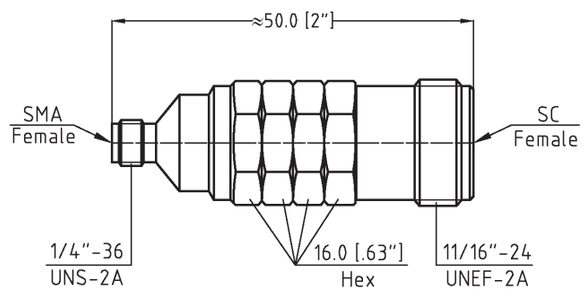

Part - No.	8H01-4180-02
Connectors	SC-male to TNC-fem.
Frequency	DC - 10.0 GHz
VSWR max.	1.06 + 0.005 x f(GHz)

Higher power application

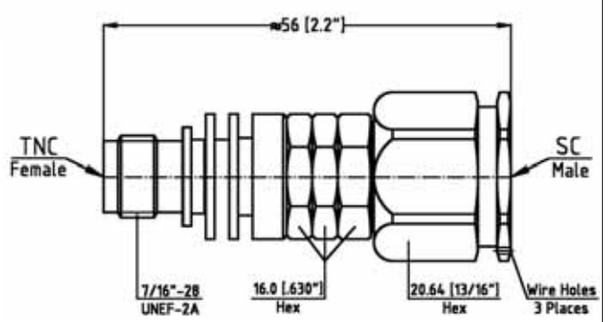

You do not find the Adapter you need for an application? You need technical support? You need price and delivery information? Please contact your nearest Spectrum Representative, or please contact us direct.

Telephone: +49-89-3548-040 Facsimile: +49-89-3548-0490
e-mail: sales@spectrum-et.com www.spectrum-et.com

O

In-Series and Between-Series Adapters SCC

SCC Adapter means Adapters with Spectrum Custom Connectors, or Adapters respectively. These units were designed for applications when nothing else did fit. Several of these units were developed for complex and integrated components, so called super-components, such as High Power Duplexers. This means that the male SCC and the mating female SCC have a specifically designed interface, developed for unique connections.

SCC	Section	Page
SCC Overview & Specifications	O	1
A) SCC Adapters when nothing else does fit		4
B) Adapters for unique requirements		8

Although our catalog incorporates a very comprehensive range of products, due to our program of continuous development, there is no way that it will contain every product we manufacture. Please consult the factory for the product you require.
To improve our Standard Products we reserve the right to make changes. Specifications are therefore subject to change without notice.

The specifications below are general specifications for all SCC connectors. Specific Data for VSWR, Insertion Loss, R.F. leakage, etc., may be available from the factory upon request. Specifications in the following table are recommended for any procurement documents or drawings. In the event of any conflict between these specifications and the customer requirements in his specific appliocation, the customer's specifications shall govern.

REQUIREMENT where applicable	GENERAL SPECIFICATIONS where applicable
Standard Materials	STEEL corrosion resistant 1.4305 per DIN EN 10088; ASTM-A582 (303), or 1.4404 (316L) respectively. ALUMINUM AlMg4.5Mn per DIN DIN EN 1706, AlMgSi0.5 per DIN EN 1706, AlMgSi1 per DIN EN 1706 (6061-T6 per QQ-A-225/8). BRASS CuZn39Pb3 per DIN 17660 (QQ-B-626 (ASTM-B124), half hard). COPPER BERYLLIUM 33-25 CuBe2PbH per DIN17666(DIN CEN/TS;DIN SPEC 9700)(QQ-C530). TFE Fluorocarbon per DIN 52900 (ASTM-D-1710), or Thermoplast per DIN EN ISO 10350, or PEI per in-house specification respectively for higher temperature applications. SILICONE RUBBER per DIN ISO 3601)(A-A-59588,Class IIB) Gr. 50 - 75. BORIUM NITRITE Dielectric for high power applications per in-house specification
Finish for COPPER BERYLLIUM STAINLESS STEEL ALUMINUM BRASS VARIOUS	Center Contacts shall be gold plated to a minimum thickness of .00005-inch in accordance with ASTM-B-488, Type III, Code C, Class 1.25 shall be passivated per ASTM-A967 Conductive Parts shall have an iridited finish per MIL-DTL-5541 Other parts, such as Coupling Nuts and Back-Bodies shall be anodized per MIL-A-8625. .00003 inch (0.8 µm) min. gold plating per MIL-DTL-45204, or nickel plating per QQ-N-290, as specified. Imoloy .0001 inch (2.5 µm) min. plating, consisting of 55% Copper / 20% Zinc / 25% Tin (on special request).
Design	The design shall be such that the outline dimensions are meeting the customer's specification.
ELECTRICAL	
Frequency Range Insulation Resistance Voltage Standing Wave Ratio (VSWR) Contact Resistance Dielectric Withstanding Voltage RF High Potential Withstanding Voltage RF Leakage Insertion Loss	To be defined per customer specification and his specific application.
MECHANICAL	
Connector Durability Cable Retention Force Coupling Nut Retention Force Force to Engage and Disengage Longitudinal Force max. Mating Characteristics Recommended Mating Torque	To be defined per customer specification and his specific application.
ENVIRONMENTAL, if applicable at all	
Corrosion (Salt Spray)	Specification MIL-STD-202, Method 101, Test Condition B. The salt solution shall be 5%.
Vibration	Specification MIL-STD-202, Method 204, Test Condition D.
Shock	Specification MIL-STD-202, Method 213, Test Condition I.
Thermal Shock	Specification MIL-STD-202, Method 107, Test Condition B, except high temperature shall be + 200°C.
Moisture Resistance	Specification MIL-STD-202, Method 106. Step 7b (vibration) shall be omitted. Insulation resistance shall be 200 megohms min. within 5 minutes of removal from humidity.
Corona Level	The connector shall not exhibit breakdown (corona) when the applied voltage is 375 volts rms and the altitude is 70,000 feet.

Dimensions shown are Inches over Millimeters or vice versa. Standard units have stainless finish (last 2 digits of the P/N are -02). Interfaces are per DIN 47 223, DIN 47 226, IEC 169-4, IEC 169-7, IEC 169-8, IEC 457-2, IEC 60169-5, IEEE 287, MIL-PRF-39012, MIL DTL-24044, MIL DTL-3643,MIL-STD-348B, where applicable

Spectrum Elektrotechnik GmbH
Germany
www.spectrum-et.com
sales@spectrum-et.com
Phone: +49 / 89 / 35 48 04 0
Fax: +49 / 89 / 35 48 04 90

The SCC Adapters are:
A) either designed for applications when nothing else does fit, developed for complex and integrated components, very dense packaging of various components with no room available for standard connections. Therefore the interface mating dimensions may be different from case to case. Various and new interfaces may be needed and have to be developed, depending on the application, the dimensional and electrical requirements. In order to explain these products some further please find some examples of the designs below.

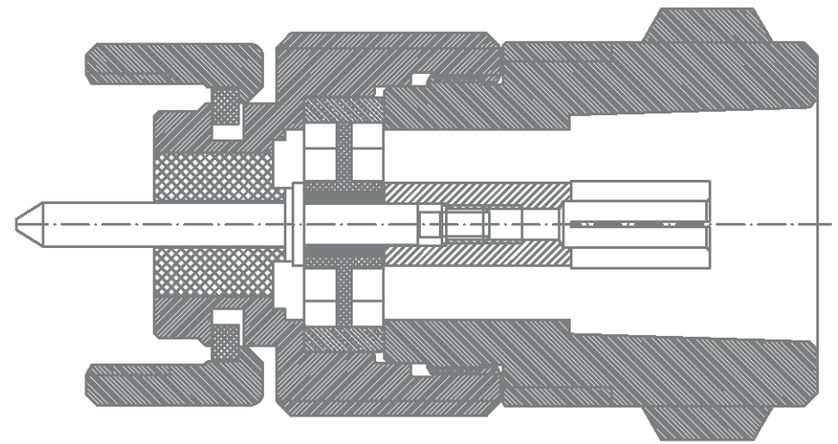

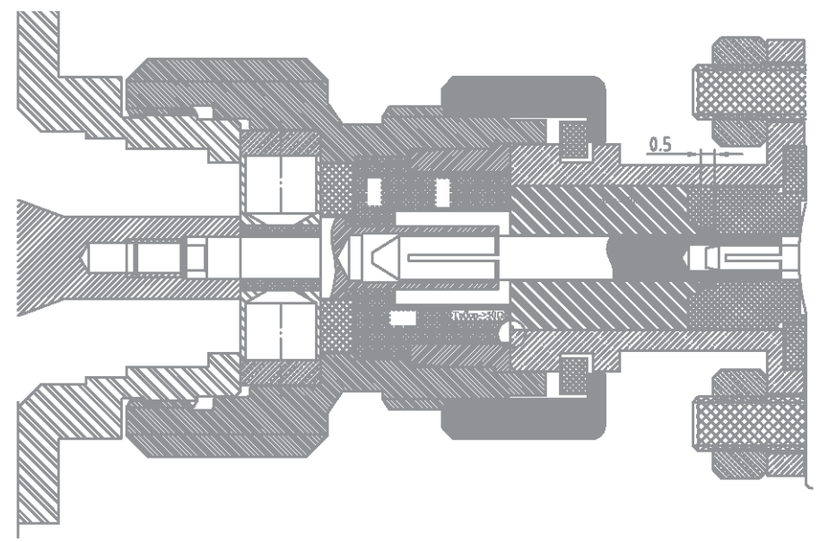

Dimensions shown are Inches over Millimeters or vice versa. Standard units have stainless finish (last 2 digits of the P/N are -02). Interfaces are per DIN 47 223, DIN 47 226, IEC 169-4, IEC 169-7, IEC 169-8, IEC 457-2, IEC 60169-5, IEEE 287, MIL-PRF-39012, MIL DTL-24044, MIL DTL-3643,MIL-STD-348B, where applicable

Spectrum Elektrotechnik GmbH
Germany
www.spectrum-et.com
sales@spectrum-et.com
Phone: +49 / 89 / 35 48 04 0
Fax: +49 / 89 / 35 48 04 90

Part - No.	9401-9090-07
Connectors	SCC-male to SCC-fem.
Frequency	DC - 8.0 GHz
VSWR max.	1.06 + 0.005 x f(GHz)

Developed to connect a circulator and a filter in a high power Duplexer

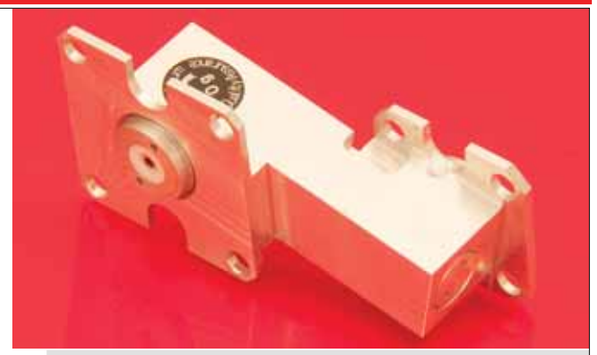

Part - No.	8001-S011-02
Connectors	SCC-fem. to N-male
Frequency	DC - 18.0 GHz
VSWR max.	1.06 + 0.005 x f(GHz)

Developed for testing a special component in a high power Duplexer

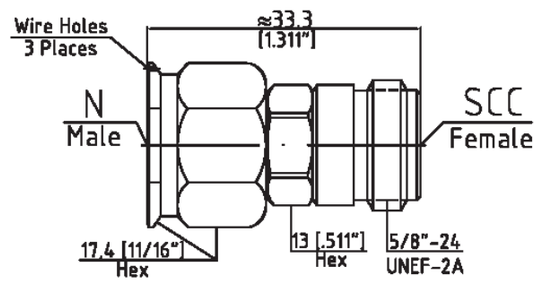

Part - No.	9499-6001-02
Connectors	SCC-fem. to SCC-fem.
Frequency	DC - 10.0 GHz
VSWR max.	1.06 + 0.005 x f(GHz)

Developed for connecting a circulator and a load in a high power Duplexer

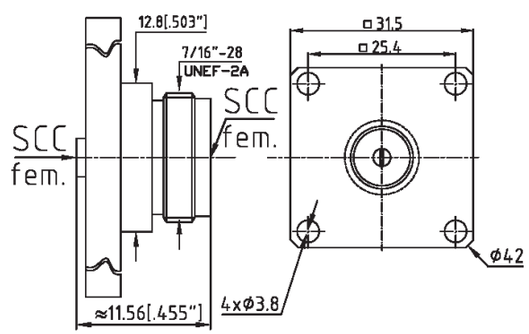

Part - No.	800R-1121-02
Connectors	SMA-fem. to QRE-fem.
Frequency	DC - 18 GHz
VSWR max.	1.06 + 0.007 x f(GHz)

Developed for testing the connector 900R-1101-02

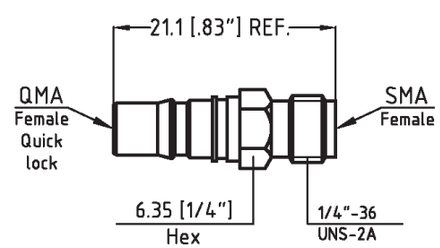

Dimensions shown are Inches over Millimeters or vice versa. Standard units have stainless finish (last 2 digits of the P/N are -02). Interfaces are per DIN 47 223, DIN 47 226, IEC 169-4, IEC 169-7, IEC 169-8, IEC 457-2, IEC 60169-5, IEEE 287, MIL-PRF-39012, MIL DTL-24044, MIL DTL-3643,MIL-STD-348B, where applicable

Spectrum Elektrotechnik GmbH
Germany
www.spectrum-et.com
sales@spectrum-et.com
Phone: +49 / 89 / 35 48 04 0
Fax: +49 / 89 / 35 48 04 90

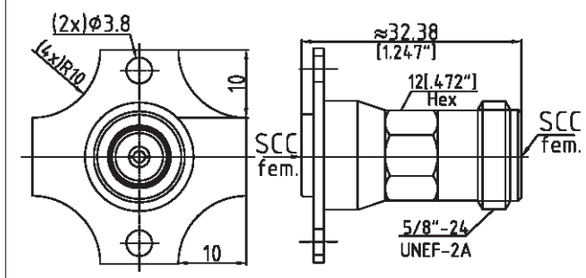

Part - No.	9499-6005-U2
Connectors	SCC-female to SCC-female
Frequency	DC - 10.0 GHz
VSWR max.	1.06 + 0.005 x f(GHz)

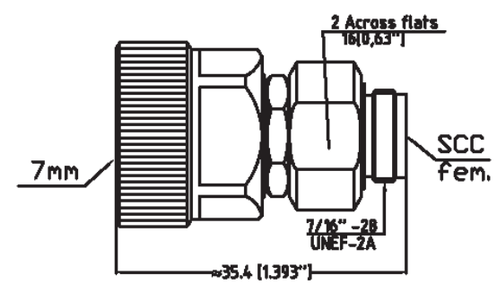

Part - No.	8001-9094-02
Connectors	SCC-female to 7mm
Frequency	DC - 10.0 GHz
VSWR max.	1.06 + 0.005 x f(GHz)

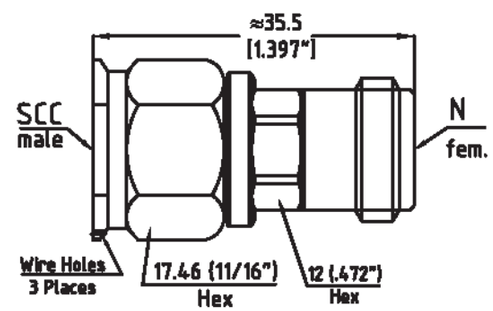

Part - No.	8001-CC61-02
Connectors	SCC-male to N female
Frequency	DC - 10.0 GHz
VSWR max.	1.06 + 0.005 x f(GHz)

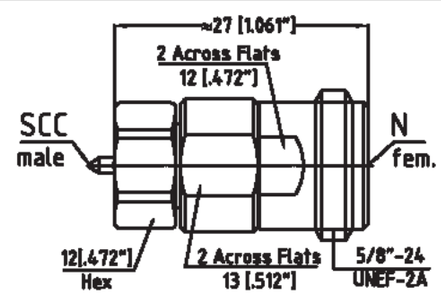

Part - No.	8002-CC61-U2
Connectors	SCC-male to N female
Frequency	DC - 10.0 GHz
VSWR max.	1.06 + 0.005 x f(GHz)

Dimensions shown are Inches over Millimeters or vice versa. Standard units have stainless finish (last 2 digits of the P/N are -02). Interfaces are per DIN 47 223, DIN 47 226, IEC 169-4, IEC 169-7, IEC 169-8, IEC 457-2, IEC 60169-5, IEEE 287, MIL-PRF-39012, MIL DTL-24044, MIL DTL-3643,MIL-STD-348B, where applicable

Spectrum Elektrotechnik GmbH
Germany
www.spectrum-et.com
sales@spectrum-et.com
Phone: +49 / 89 / 35 48 04 0
Fax: +49 / 89 / 35 48 04 90

Part - No.	8001-9099-02
Connectors	TNC special to 7mm
Frequency	DC - 18.0 GHz
VSWR max.	1.06 + 0.005 x f(GHz)

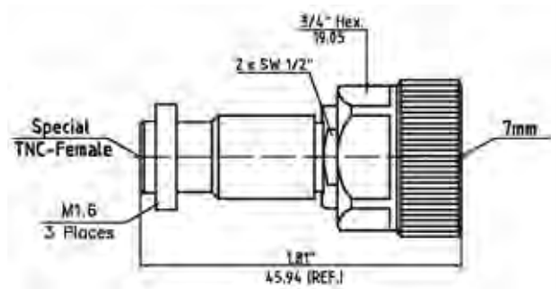

Part - No.	8U01-9099-02
Connectors	TNC special to 7mm
Frequency	DC - 18.0 GHz
VSWR max.	1.06 + 0.005 x f(GHz)

Higher Temperature Applications

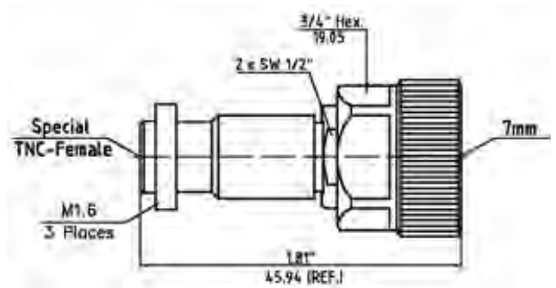

Part - No.	8001-S006-02
Connectors	TNC special to 7mm
Frequency	DC - 18.0 GHz
VSWR max.	1.06 + 0.005 x f(GHz)

8U01-S006-02 for higher temp. applications

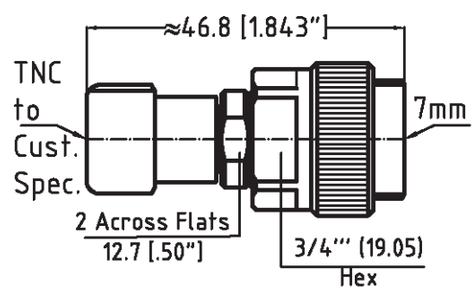

Part - No.	8001-S009-02
Connectors	BNC special to SMA-´f.
Frequency	DC - 4.0 GHz
VSWR max.	1.06 + 0.005 x f(GHz)

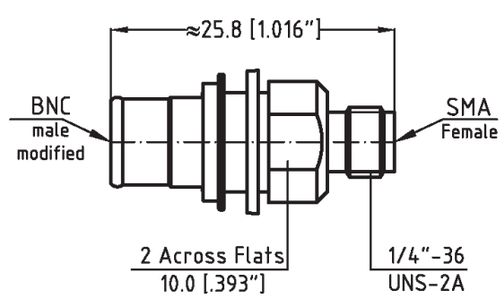

Dimensions shown are Inches over Millimeters or vice versa. Standard units have stainless finish (last 2 digits of the P/N are -02). Interfaces are per DIN 47 223, DIN 47 226, IEC 169-4, IEC 169-7, IEC 169-8, IEC 457-2, IEC 60169-5, IEEE 287, MIL-PRF-39012, MIL DTL-24044, MIL DTL-3643,MIL-STD-348B, where applicable

Spectrum Elektrotechnik GmbH
Germany
www.spectrum-et.com
sales@spectrum-et.com
Phone: +49 / 89 / 35 48 04 0
Fax: +49 / 89 / 35 48 04 90

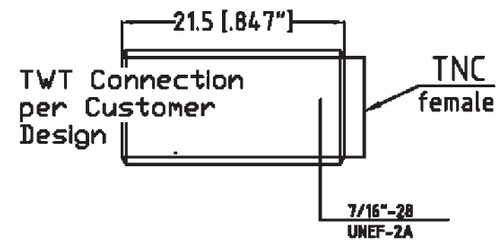

Part - No.	8001-4199-13
Connectors	TNC fem. to Special
Frequency	DC - 18.0 GHz
VSWR max.	1.06 + 0.005 x f(GHz)

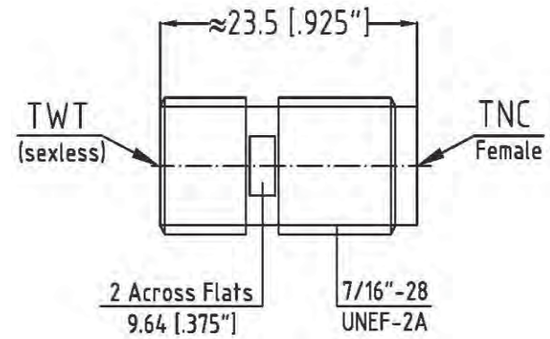

Part - No.	8002-4199-13
Connectors	TNC fem. to Special
Frequency	DC - 18.0 GHz
VSWR max.	1.06 + 0.005 x f(GHz)

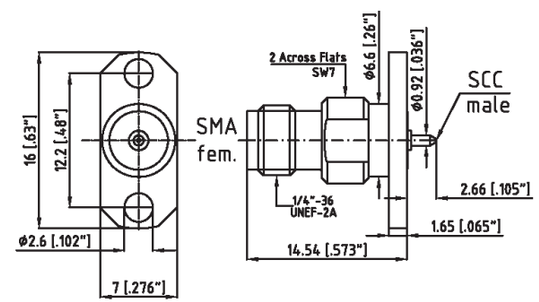

Part - No.	8001-S012-02
Connectors	SMA fem. to SCC male
Frequency	DC - 18.0 GHz
VSWR max.	1.06 + 0.005 x f(GHz)

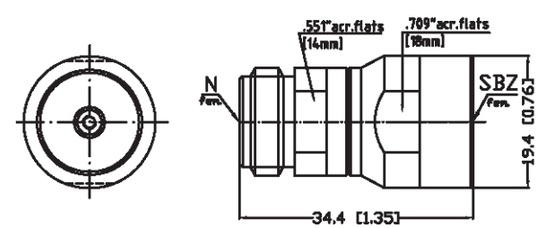

Part - No.	8001-ZF61-02
Connectors	N fem. to SBZ female
Frequency	DC - 9.0 GHz
VSWR max.	1.06 + 0.005 x f(GHz)

Dimensions shown are Inches over Millimeters or vice versa. Standard units have stainless finish (last 2 digits of the P/N are -02). Interfaces are per DIN 47 223, DIN 47 226, IEC 169-4, IEC 169-7, IEC 169-8, IEC 457-2, IEC 60169-5, IEEE 287, MIL-PRF-39012, MIL DTL-24044, MIL DTL-3643,MIL-STD-348B, where applicable

Spectrum Elektrotechnik GmbH
Germany
www.spectrum-et.com
sales@spectrum-et.com
Phone: +49 / 89 / 35 48 04 0
Fax: +49 / 89 / 35 48 04 90

O

Part - No.	8001-ZM61-02
Connectors	N fem. to SBZ male
Frequency	DC - 9.0 GHz
VSWR max.	1.06 + 0.005 x f(GHz)

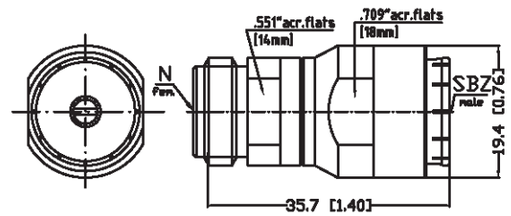

Part - No.	8001-S007-02
Connectors	2.92mm to Special
Frequency	DC - 18.0 GHz
VSWR max.	1.06 + 0.005 x f(GHz)

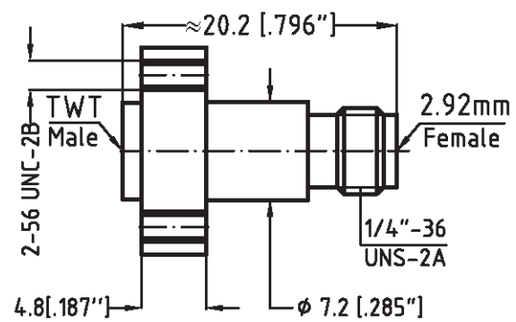

Part - No.	8001-H2KM-S1
Connectors	2.4mm-NMD fem. to 2.92mm-male
Frequency	DC - 40.0 GHz
VSWR max.	1.06 + 0.005 x f(GHz)

B) SCC Adapters made to unique customer requirements, here for example:
Adapter Pair of different connector configuration, manufactured and tested by using the appropriate tools, to the specification:
Phase Match of +/- 5 degrees at 18 GHz

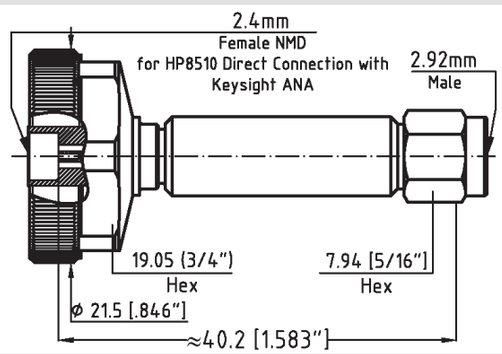

Part - No.	8001-H231-S1
Connectors	2.4mm-NMD fem. to TNC-male
Frequency	DC - 18.0 GHz
VSWR max.	1.06 + 0.005 x f(GHz)

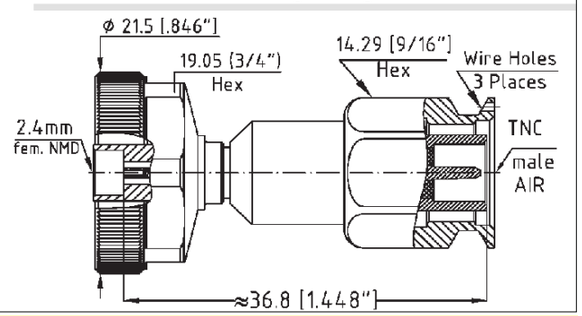

Dimensions shown are Inches over Millimeters or vice versa. Standard units have stainless finish (last 2 digits of the P/N are -02). Interfaces are per DIN 47 223, DIN 47 226, IEC 169-4, IEC 169-7, IEC 169-8, IEC 457-2, IEC 60169-5, IEEE 287, MIL-PRF-39012, MIL DTL-24044, MIL DTL-3643,MIL-STD-348B, where applicable

Spectrum Elektrotechnik GmbH
Germany
www.spectrum-et.com
sales@spectrum-et.com
Phone: +49 / 89 / 35 48 04 0
Fax: +49 / 89 / 35 48 04 90

In-Series and Between-Series Adapters SMA

If your choice of SMA Adapter is not shown in this section, please refer to the Table below to determine other possible locations. Should you not find your adapter listed in any section, please consult the factory or your Spectrum Elektrotechnik Area Representative.

P

SMA	Section	Page
SMA Overview & Specifications	P	1
SMA In-Series		4
Between Series SMA to BNC		14
Between Series SMA to 7mm	E	14
Between Series SMA to BMA	G	7
Between Series SMA to N	K	30
Between Series SMA to N Push-On and Slide-On	DD	24
Between Series SMA to N with Metric Thread	AA	10
Between Series SMA to SBX	L	7
Between Series SMA to SBY	M	6
Between Series SMA to SC	N	10
Between Series SMA to SMA with Metric Thread	AA	14
Between Series SMA to SMA Push-On and Slide-On	DD	40
Between Series SMA to SMA Push- & Slide-On Rev. Sex		46
Between Series SMA to SMP	R	16
Between Series SMA to SMPM	U	9
Between Series SMA to SSMA	V	5
Between Series SMA to SPM	W	5
Between Series SMA to TNC	X	25
Between Series SMA to TNC Push-On and Slide-On	DD	34
Between Series SMA to TNX	Z	9

Although our catalog incorporates a very comprehensive range of products, due to our program of continuous development, there is no way that it will contain every product we manufacture. Please consult the factory for the product you require.
To improve our Standard Products we reserve the right to make changes. Specifications are therefore subject to change without notice.

Dimensions shown are Inches over Millimeters or vice versa. Standard units have stainless finish (last 2 digits of the P/N are -02). Interfaces are per DIN 47 223, DIN 47 226, IEC 169-4, IEC 169-7, IEC 169-8, IEC 457-2, IEC 60169-5, IEEE 287, MIL-PRF-39012, MIL DTL-24044, MIL DTL-3643,MIL-STD-348B, where applicable

Spectrum Elektrotechnik GmbH
Germany
www.spectrum-et.com
sales@spectrum-et.com
Phone: +49 / 89 / 35 48 04 0
Fax: +49 / 89 / 35 48 04 90

P

The specifications below are general specifications for all SMA connectors. Specific Data for VSWR, Insertion Loss, R.F. leakage, etc., are available from the factory upon request. Specifications in the following table are recommended for any procurement documents or drawings. In the event of any conflict between these specifications and General Specifications MIL-PRF-39012, these specifications shall govern. These specifications are subject to change according to the latest revision.

REQUIREMENT	GENERAL SPECIFICATIONS
Standard Materials	STEEL corrosion resistant 1.4305 per DIN EN 10088; ASTM-A582 (303), or 1.4404 (316L) respectively. ALUMINUM AlMg4.5Mn per DIN DIN EN 1706, AlMgSi0.5 per DIN EN 1706, AlMgSi1 per DIN EN 1706 (6061-T6 per QQ-A-225/8). BRASS CuZn39Pb3 per DIN 17660 (QQ-B-626 (ASTM-B124), half hard). COPPER BERYLLIUM 33-25 CuBe2PbH per DIN17666(DIN CEN/TS;DIN SPEC 9700)(QQ-C530). TFE Fluorocarbon per DIN 52900 (ASTM-D-1710) SILICONE RUBBER per DIN ISO 3601)(A-A-59588,Class IIB) Gr. 50 - 75. BORIUM NITRITE Dielectric for high power applications per in-house specification
Finish for COPPER BERYLLIUM STAINLESS STEEL ALUMINUM BRASS VARIOUS	Center Contacts shall be gold plated to a minimum thickness of .00005-inch in accordance with ASTM-B-488, Type III, Code C, Class 1.25 shall be passivated per ASTM-A967 Conductive Parts shall have an iridited finish per MIL-DTL-5541 Other parts, such as Coupling Nuts and Back-Bodies shall be anodized per MIL-A-8625. .00003 inch (0.8 µm) min. gold plating per MIL-DTL-45204, or nickel plating per QQ-N-290, as specified. Imoloy .0001 inch (2.5 µm) min. plating, consisting of 55% Copper / 20% Zinc / 25% Tin (on special request).
Design	The design shall be such that the outline dimensions in this catalog are met. In addition, the assembled connector shall meet the interface dimensions.
ELECTRICAL	
Frequency Range	DC - 18.0 GHz min.
Insulation Resistance	The insulation resistance shall not be less than 5,000 megohms.
Voltage Standing Wave Ratio (VSWR)	1.06 + .005 * f (GHz)
Contact Resistance	The center contact resistance drop shall not exceed 3.0 milliohms and the outer contact resistance drop shall not exceed 2.0 milliohms.
Dielectric Withstanding Voltage	The magnitude of the test voltage shall be 1,000 volts rms at sea level.
RF High Potential Withstanding Voltage	The RF high potential withstanding voltage is 670 volts rms at 5 MHz. Leakage is not applicable.
RF Leakage	- (90 - f (GHz)) dB
Insertion Loss	(.05 SQT(f(GHz))) dB
MECHANICAL	
Connector Durability	The connector is to be tested and its mating connector shall be subjected to 500 insertions and withdrawal cycles at 12 cycles per minute max. The connector shall show no evidence of mechanical failure and the connector shall meet the mating characteristic requirements.
Cable Retention Force	60 pounds (267 N) min.
Coupling Nut Retention Force	Not applicable for Female connectors. For male connectors, the axial force is 100 lbs (445 N) max.. The torque is 15 inch-pounds (1.7 Nm) max.
Force to Engage and Disengage	The torque required to engage and disengage shall not exceed 2 inch-pounds (0.226 Nm).
Longitudinal Force max.	Longitudinal force is not applicable.
Mating Characteristics	See interface dimensions shown on next page. Applicable to Females only: oversize pin .0376 inch (.955 mm) max. dia. pin; .045 inch (1.14 mm) deep; insertion force 3 lbs. (13.34 N) max. with .037 inch (.94 mm) min. dia. pin; withdrawal force 1.00 oz (.278 N) min. with .0355 inch (.90 mm) max. dia. pin.
Recommended Mating Torque	7 - 10 inch-pounds (0.8 - 1.13 Nm)
ENVIRONMENTAL	
Corrosion (Salt Spray)	Specification MIL-STD-202, Method 101, Test Condition B. The salt solution shall be 5%.
Vibration	Specification MIL-STD-202, Method 204, Test Condition D.
Shock	Specification MIL-STD-202, Method 213, Test Condition I.
Thermal Shock	Specification MIL-STD-202, Method 107, Test Condition B, except high temperature shall be + 200°C.
Moisture Resistance	Specification MIL-STD-202, Method 106. Step 7b (vibration) shall be omitted. Insulation resistance shall be 200 megohms min. within 5 minutes of removal from humidity.
Corona Level	The connector shall not exhibit breakdown (corona) when the applied voltage is 375 volts rms and the altitude is 70,000 feet.

Dimensions shown are Inches over Millimeters or vice versa. Standard units have stainless finish (last 2 digits of the P/N are -02). Interfaces are per DIN 47 223, DIN 47 226, IEC 169-4, IEC 169-7, IEC 169-8, IEC 457-2, IEC 60169-5, IEEE 287, MIL-PRF-39012, MIL DTL-24044, MIL DTL-3643,MIL-STD-348B, where applicable

Spectrum Elektrotechnik GmbH
Germany
www.spectrum-et.com
sales@spectrum-et.com
Phone: +49 / 89 / 35 48 04 0
Fax: +49 / 89 / 35 48 04 90

P

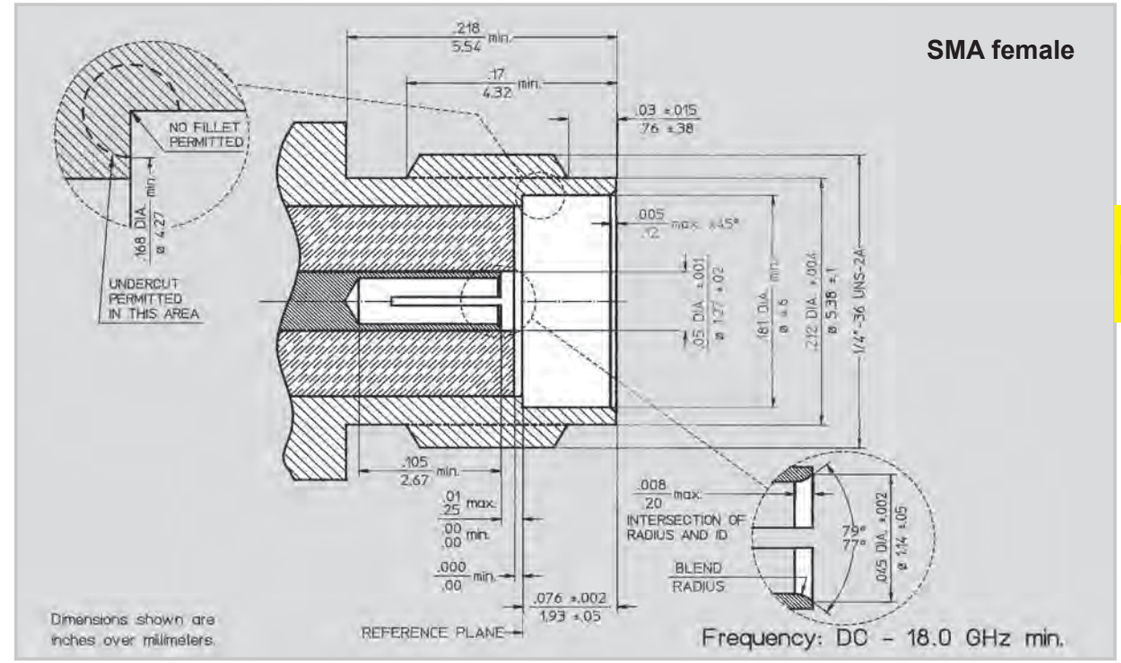

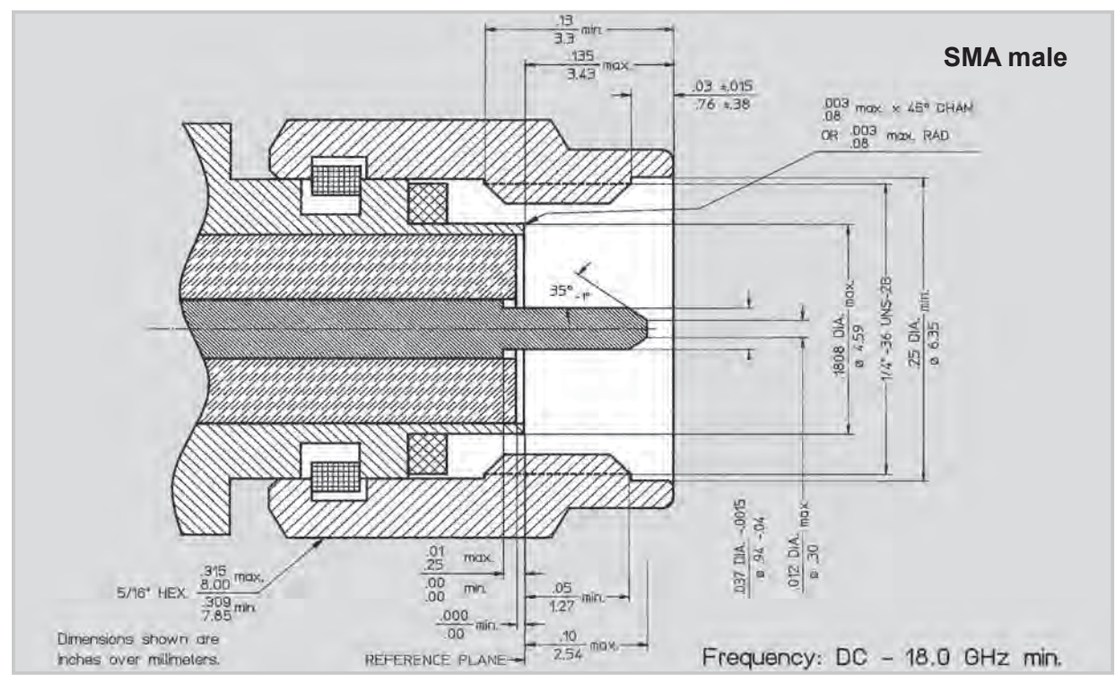

Dimensions shown are Inches over Millimeters or vice versa. Standard units have stainless finish (last 2 digits of the P/N are -02). Interfaces are per DIN 47 223, DIN 47 226, IEC 169-4, IEC 169-7, IEC 169-8, IEC 457-2, IEC 60169-5, IEEE 287, MIL-PRF-39012, MIL DTL-24044, MIL DTL-3643,MIL-STD-348B, where applicable

Spectrum Elektrotechnik GmbH
Germany
www.spectrum-et.com
sales@spectrum-et.com
Phone: +49 / 89 / 35 48 04 0
Fax: +49 / 89 / 35 48 04 90

Part - No.	8001-2121-02
Connectors	SMA-fem. to SMA-fem.
Frequency	DC - 18.0 GHz
VSWR max.	1.06 + 0.005 x f(GHz)

8001-2121-00 is stainless steel gold plated

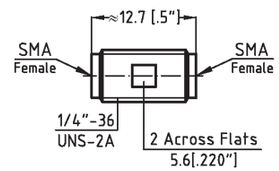

Part - No.	8007-2121-02
Connectors	SMA-fem. to SMA-fem.
Frequency	DC - 18.0 GHz
VSWR max.	1.06 + 0.005 x f(GHz)

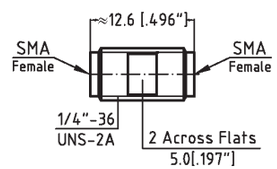

Part - No.	8005-2121-02
Connectors	SMA-fem. to SMA-fem.
Frequency	DC - 18.0 GHz
VSWR max.	1.06 + 0.005 x f(GHz)

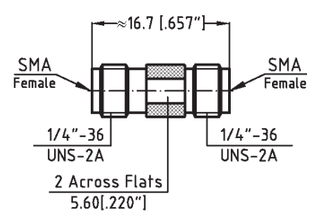

Part - No.	8008-2121-02
Connectors	SMA-fem. to SMA-fem.
Frequency	DC - 18.0 GHz
VSWR max.	1.06 + 0.005 x f(GHz)

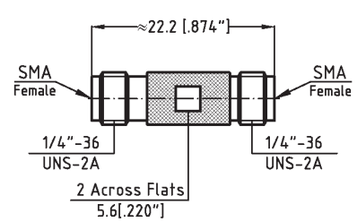

Dimensions shown are Inches over Millimeters or vice versa. Standard units have stainless finish (last 2 digits of the P/N are -02). Interfaces are per DIN 47 223, DIN 47 226, IEC 169-4, IEC 169-7, IEC 169-8, IEC 457-2, IEC 60169-5, IEEE 287, MIL-PRF-39012, MIL DTL-24044, MIL DTL-3643,MIL-STD-348B, where applicable

Spectrum Elektrotechnik GmbH
Germany
www.spectrum-et.com
sales@spectrum-et.com
Phone: +49 / 89 / 35 48 04 0
Fax: +49 / 89 / 35 48 04 90

In-Series Adapters of Type SMA-fem./fem.

Part - No.	8002-2121-02
Connectors	SMA-fem. to SMA-fem.
Frequency	DC - 18.0 GHz
VSWR max.	1.06 + 0.005 x f(GHz)

8002-2121-00 is stainless steel gold plated

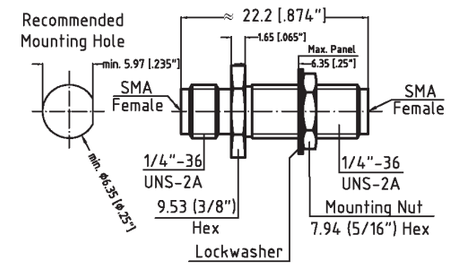

Part - No.	8011-2121-02
Connectors	SMA-fem. to SMA-fem.
Frequency	DC - 18.0 GHz
VSWR max.	1.06 + 0.005 x f(GHz)

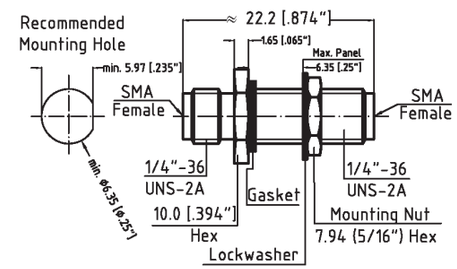

Part - No.	8004-2121-02
Connectors	SMA-fem. to SMA-fem.
Frequency	DC - 18.0 GHz
VSWR max.	1.06 + 0.005 x f(GHz)

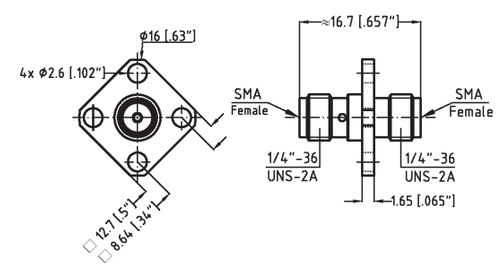

Part - No.	8012-2121-02
Connectors	SMA-fem. to SMA-fem.
Frequency	DC - 18.0 GHz
VSWR max.	1.06 + 0.005 x f(GHz)

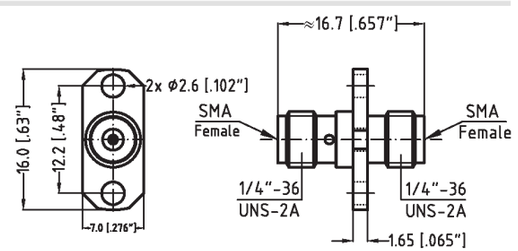

Dimensions shown are Inches over Millimeters or vice versa. Standard units have stainless finish (last 2 digits of the P/N are -02). Interfaces are per DIN 47 223, DIN 47 226, IEC 169-4, IEC 169-7, IEC 169-8, IEC 457-2, IEC 60169-5, IEEE 287, MIL-PRF-39012, MIL DTL-24044, MIL DTL-3643,MIL-STD-348B, where applicable

Spectrum Elektrotechnik GmbH
Germany
www.spectrum-et.com
sales@spectrum-et.com
Phone: +49 / 89 / 35 48 04 0
Fax: +49 / 89 / 35 48 04 90

P

Part - No.	8009-2121-02
Connectors	SMA-fem. to SMA-fem.
Frequency	DC - 18.0 GHz
VSWR max.	1.06 + 0.005 x f(GHz)

with dust cap and chain

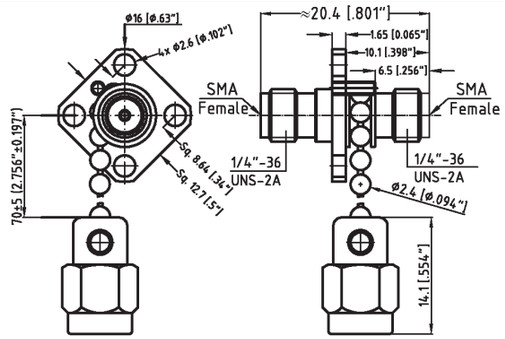

Part - No.	8091-2121-00
Connectors	SMA-fem. to SMA-fem.
Frequency	DC - 25.0 GHz
VSWR max.	1.06 + 0.007 x f(GHz)

Connector body is gold plated

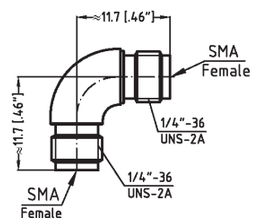

Part - No.	8091-2121-02
Connectors	SMA-fem. to SMA-fem.
Frequency	DC - 25.0 GHz
VSWR max.	1.06 + 0.007 x f(GHz)

Connector body is passivated stainless steel

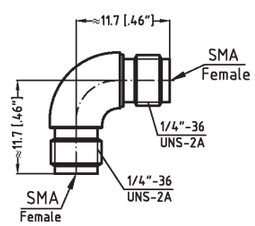

You do not find the Adapter you need for an application? You need technical support? You need price and delivery information? Please contact your nearest Spectrum Representative, or please contact us direct.

Telephone: +49-89-3548-040 Facsimile: +49-89-3548-0490
e-mail: sales@spectrum-et.com www.spectrum-et.com

Dimensions shown are Inches over Millimeters or vice versa. Standard units have stainless finish (last 2 digits of the P/N are -02). Interfaces are per DIN 47 223, DIN 47 226, IEC 169-4, IEC 169-7, IEC 169-8, IEC 457-2, IEC 60169-5, IEEE 287, MIL-PRF-39012, MIL DTL-24044, MIL DTL-3643,MIL-STD-348B, where applicable

P

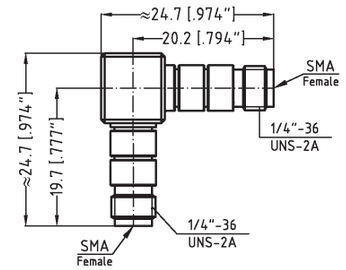

Part - No.	8393-2121-02
Connectors	SMA-fem. to SMA-fem.
Frequency	DC - 18.0 GHz
VSWR max.	1.06 + 0.007 x f(GHz)

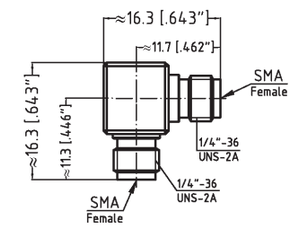

Part - No.	8090-2121-02
Connectors	SMA-fem. to SMA-fem.
Frequency	DC - 18.0 GHz
VSWR max.	1.06 + 0.007 x f(GHz)

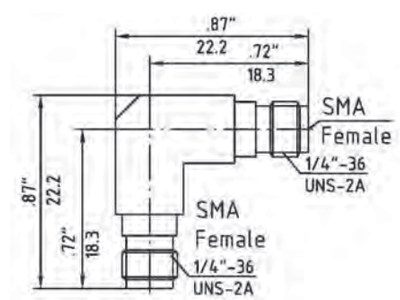

Part - No.	8190-2121-02
Connectors	SMA-fem. to SMA-fem.
Frequency	DC - 18.0 GHz
VSWR max.	1.06 + 0.007 x f(GHz)

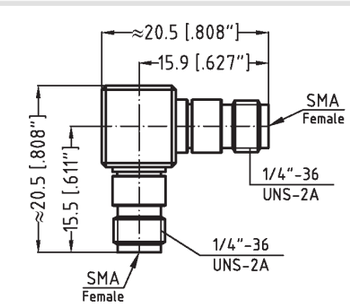

Part - No.	8292-2121-02
Connectors	SMA-fem. to SMA-fem.
Frequency	DC - 18.0 GHz
VSWR max.	1.06 + 0.007 x f(GHz)

Dimensions shown are Inches over Millimeters or vice versa. Standard units have stainless finish (last 2 digits of the P/N are -02). Interfaces are per DIN 47 223, DIN 47 226, IEC 169-4, IEC 169-7, IEC 169-8, IEC 457-2, IEC 60169-5, IEEE 287, MIL-PRF-39012, MIL DTL-24044, MIL DTL-3643,MIL-STD-348B, where applicable

P

Part - No.	8001-1121-02
Connectors	SMA-fem. to SMA-male
Frequency	DC - 18.0 GHz
VSWR max.	1.06 + 0.005 x f(GHz)

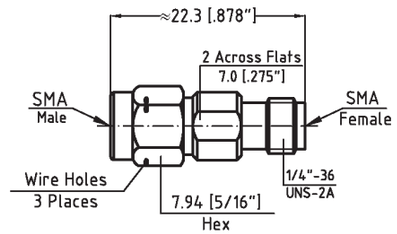

Part - No.	8002-1121-02
Connectors	SMA-fem. to SMA-male
Frequency	DC - 18.0 GHz
VSWR max.	1.06 + 0.005 x f(GHz)

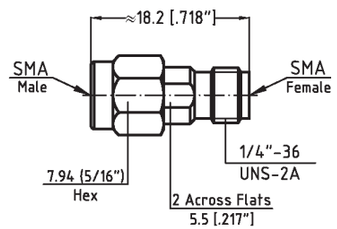

Part - No.	8003-1121-02
Connectors	SMA-fem. to SMA-male
Frequency	DC - 18.0 GHz
VSWR max.	1.06 + 0.005 x f(GHz)

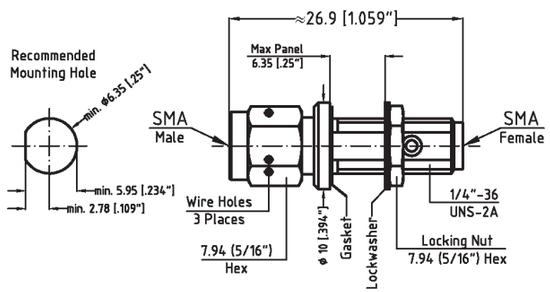

Part - No.	8004-1121-02
Connectors	SMA-fem. to SMA-male
Frequency	DC - 18.0 GHz
VSWR max.	1.06 + 0.005 x f(GHz)

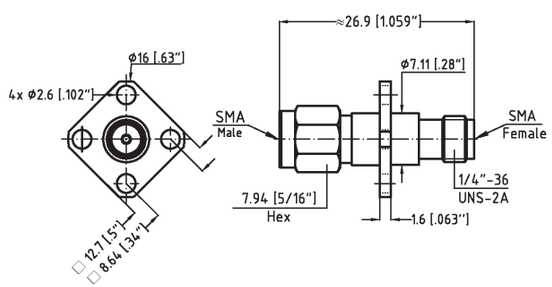

Dimensions shown are Inches over Millimeters or vice versa. Standard units have stainless finish (last 2 digits of the P/N are -02). Interfaces are per DIN 47 223, DIN 47 226, IEC 169-4, IEC 169-7, IEC 169-8, IEC 457-2, IEC 60169-5, IEEE 287, MIL-PRF-39012, MIL DTL-24044, MIL DTL-3643,MIL-STD-348B, where applicable

Spectrum Elektrotechnik GmbH
Germany
www.spectrum-et.com
sales@spectrum-et.com
Phone: +49 / 89 / 35 48 04 0
Fax: +49 / 89 / 35 48 04 90

P

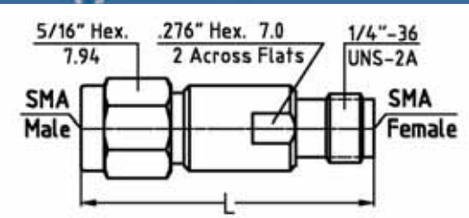

Part - No.	80XX-1121-05
Connectors	SMA-fem. to SMA-male
Frequency	DC - 18.0 GHz
VSWR max.	1.06 + 0.005 x f(GHz)

Adapters, used for phase adjustment; DC - 18.0 GHz

Part number	Length L in inches	Length L in mm
8035-1121-05	0.948	24.08
8040-1121-05	1.058	26.88
8045-1121-05	1.163	29.53
8050-1121-05	1.270	32.25
8055-1121-05	1.377	34.98
8060-1121-05	1.489	37.83
8065-1121-05	1.597	40.56
8070-1121-05	1.707	43.35
8075-1121-05	1.813	46.04
8080-1121-05	1.921	48.79
8085-1121-05	2.029	51.54
8090-1121-05	2.135	54.24
8095-1121-05	2.246	57.05

Dimensions shown are Inches over Millimeters or vice versa. Standard units have stainless finish (last 2 digits of the P/N are -02). Interfaces are per DIN 47 223, DIN 47 226, IEC 169-4, IEC 169-7, IEC 169-8, IEC 457-2, IEC 60169-5, IEEE 287, MIL-PRF-39012, MIL DTL-24044, MIL DTL-3643,MIL-STD-348B, where applicable

Spectrum Elektrotechnik GmbH
Germany
www.spectrum-et.com
sales@spectrum-et.com
Phone: +49 / 89 / 35 48 04 0
Fax: +49 / 89 / 35 48 04 90

P

Part - No.	8090-1121-02
Connectors	SMA-fem. to SMA-male.
Frequency	DC - 18.0 GHz
VSWR max.	1.06 + 0.007 x f(GHz)

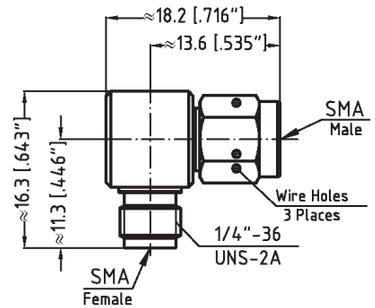

Part - No.	8190-1121-02
Connectors	SMA-fem. to SMA-male
Frequency	DC - 18.0 GHz
VSWR max.	1.06 + 0.007 x f(GHz)

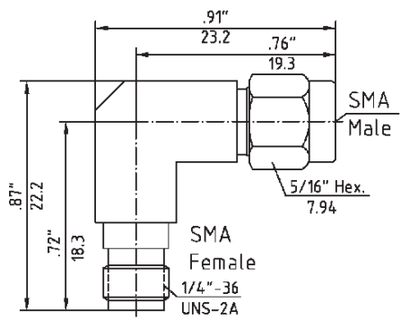

Part - No.	8390-1121-02
Connectors	SMA-fem. to SMA-male
Frequency	DC - 18.0 GHz
VSWR max.	1.06 + 0.007 x f(GHz)

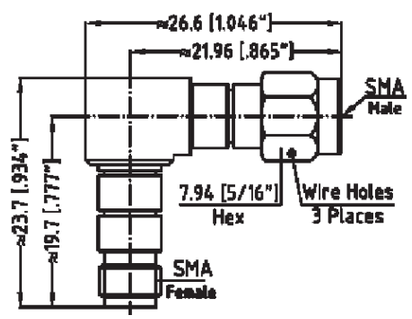

Part - No.	8490-1121-32
Connectors	SMA-fem. to SMA-male
Frequency	DC - 18.0 GHz
VSWR max.	1.06 + 0.007 x f(GHz)

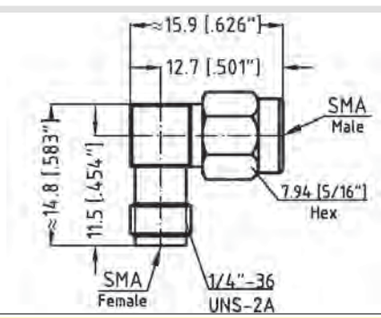

Stainless Steel Parts are from 1.4404 (316L)

Dimensions shown are Inches over Millimeters or vice versa. Standard units have stainless finish (last 2 digits of the P/N are -02). Interfaces are per DIN 47 223, DIN 47 226, IEC 169-4, IEC 169-7, IEC 169-8, IEC 457-2, IEC 60169-5, IEEE 287, MIL-PRF-39012, MIL DTL-24044, MIL DTL-3643,MIL-STD-348B, where applicable

Spectrum Elektrotechnik GmbH
Germany
www.spectrum-et.com
sales@spectrum-et.com
Phone: +49 / 89 / 35 48 04 0
Fax: +49 / 89 / 35 48 04 90

P

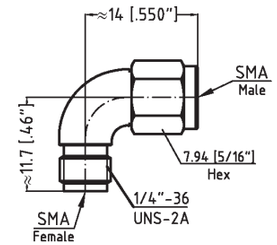

Part - No.	8091-1121-00
Connectors	SMA-fem. to SMA-male
Frequency	DC - 25.0 GHz
VSWR max.	1.06 + 0.007 x f(GHz)

Body is gold plated stainless steel

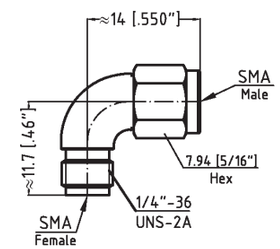

Part - No.	8091-1121-02
Connectors	SMA-fem. to SMA-male
Frequency	DC - 25.0 GHz
VSWR max.	1.06 + 0.007 x f(GHz)

Body is passivated plated stainless steel

Dimensions shown are Inches over Millimeters or vice versa. Standard units have stainless finish (last 2 digits of the P/N are -02). Interfaces are per DIN 47 223, DIN 47 226, IEC 169-4, IEC 169-7, IEC 169-8, IEC 457-2, IEC 60169-5, IEEE 287, MIL-PRF-39012, MIL DTL-24044, MIL DTL-3643,MIL-STD-348B, where applicable

Spectrum Elektrotechnik GmbH
Germany
www.spectrum-et.com
sales@spectrum-et.com
Phone: +49 / 89 / 35 48 04 0
Fax: +49 / 89 / 35 48 04 90

Part - No.	8001-1111-02
Connectors	SMA-male to SMA-male
Frequency	DC - 18.0 GHz
VSWR max.	1.06 + 0.005 x f(GHz)

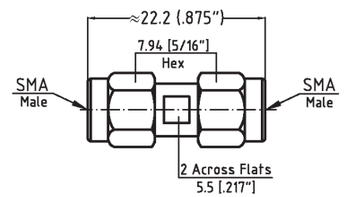

Part - No.	8090-1111-02
Connectors	SMA-male to SMA-male
Frequency	DC - 18.0 GHz
VSWR max.	1.06 + 0.007 x f(GHz)

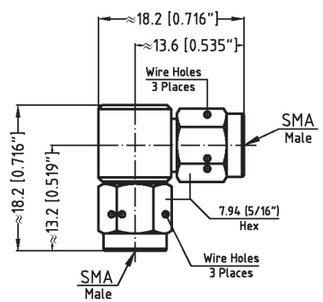

Part - No.	8093-1111-02
Connectors	SMA-male to SMA-male
Frequency	DC - 18.0 GHz
VSWR max.	1.06 + 0.007 x f(GHz)

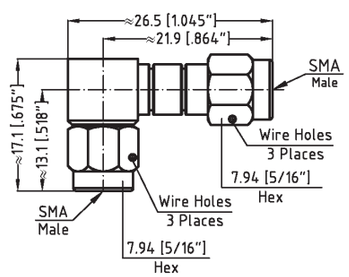

Part - No.	8292-1111-02
Connectors	SMA-male to SMA-male
Frequency	DC - 18.0 GHz
VSWR max.	1.06 + 0.007 x f(GHz)

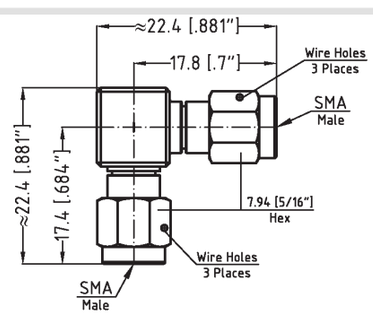

Dimensions shown are Inches over Millimeters or vice versa. Standard units have stainless finish (last 2 digits of the P/N are -02). Interfaces are per DIN 47 223, DIN 47 226, IEC 169-4, IEC 169-7, IEC 169-8, IEC 457-2, IEC 60169-5, IEEE 287, MIL-PRF-39012, MIL DTL-24044, MIL DTL-3643,MIL-STD-348B, where applicable

Spectrum Elektrotechnik GmbH
Germany
www.spectrum-et.com
sales@spectrum-et.com
Phone: +49 / 89 / 35 48 04 0
Fax: +49 / 89 / 35 48 04 90

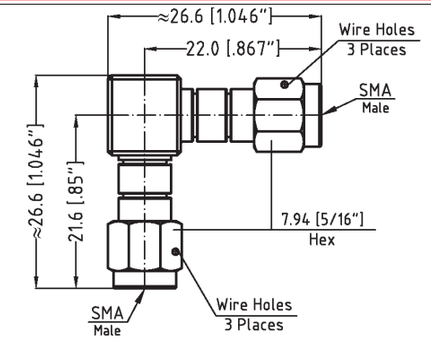

Part - No.	8393-1111-02
Connectors	SMA-male to SMA-male
Frequency	DC - 18.0 GHz
VSWR max.	1.06 + 0.007 x f(GHz)

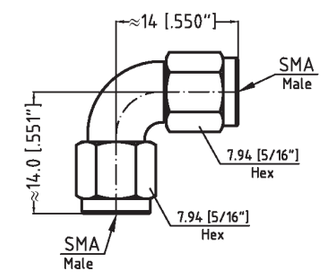

Part - No.	8091-1111-00
Connectors	SMA-male to SMA-male
Frequency	DC - 25.0 GHz
VSWR max.	1.06 + 0.007 x f(GHz)

connector body is gold plated stainless steel

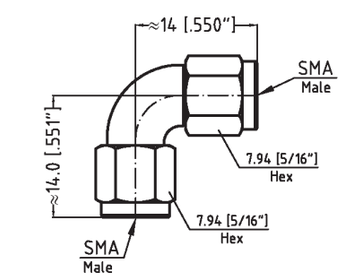

Part - No.	8091-1111-02
Connectors	SMA-male to SMA-male
Frequency	DC - 25.0 GHz
VSWR max.	1.06 + 0.007 x f(GHz)

connector body is stainless steel passivated

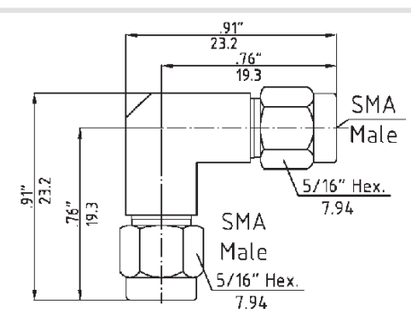

Part - No.	8190-1111-02
Connectors	SMA-male to SMA-male
Frequency	DC - 18.0 GHz
VSWR max.	1.06 + 0.007 x f(GHz)

Both coupling nuts have wire holes

Dimensions shown are Inches over Millimeters or vice versa. Standard units have stainless finish (last 2 digits of the P/N are -02). Interfaces are per DIN 47 223, DIN 47 226, IEC 169-4, IEC 169-7, IEC 169-8, IEC 457-2, IEC 60169-5, IEEE 287, MIL-PRF-39012, MIL DTL-24044, MIL DTL-3643,MIL-STD-348B, where applicable

Spectrum Elektrotechnik GmbH
Germany
www.spectrum-et.com
sales@spectrum-et.com
Phone: +49 / 89 / 35 48 04 0
Fax: +49 / 89 / 35 48 04 90

Part - No.	8001-2181-02
Connectors	SMA-fem. to BNC-fem.
Frequency	DC - 10.0 GHz
VSWR max.	1.06 + 0.005 x f(GHz)

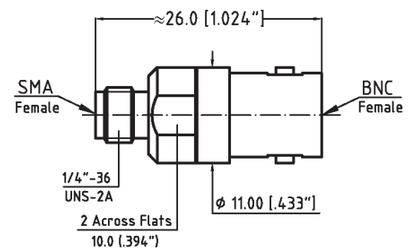

Part - No.	8003-2181-02
Connectors	SMA-fem. to BNC-fem.
Frequency	DC - 10.0 GHz
VSWR max.	1.06 + 0.005 x f(GHz)

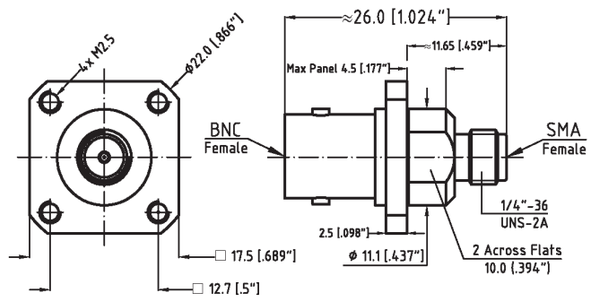

Part - No.	8001-2171-02
Connectors	SMA-fem. to BNC-male
Frequency	DC - 10.0 GHz
VSWR max.	1.06 + 0.005 x f(GHz)

8U01-2171-02 for higher temp. applications

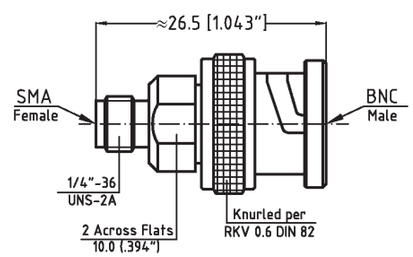

Part - No.	8001-1181-02
Connectors	SMA-male to BNC-fem.
Frequency	DC - 10.0 GHz
VSWR max.	1.06 + 0.005 x f(GHz)

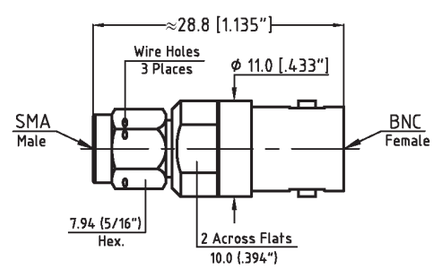

Dimensions shown are Inches over Millimeters or vice versa. Standard units have stainless finish (last 2 digits of the P/N are -02). Interfaces are per DIN 47 223, DIN 47 226, IEC 169-4, IEC 169-7, IEC 169-8, IEC 457-2, IEC 60169-5, IEEE 287, MIL-PRF-39012, MIL DTL-24044, MIL DTL-3643,MIL-STD-348B, where applicable

Spectrum Elektrotechnik GmbH
Germany
www.spectrum-et.com
sales@spectrum-et.com
Phone: +49 / 89 / 35 48 04 0
Fax: +49 / 89 / 35 48 04 90

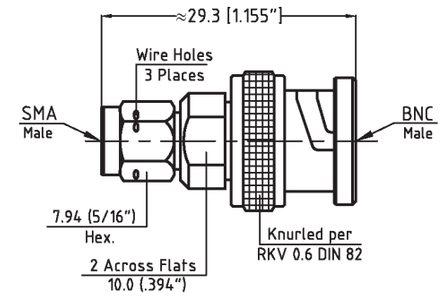

Part - No.	8001-1171-02
Connectors	SMA-male to BNC-male
Frequency	DC - 10.0 GHz
VSWR max.	1.06 + 0.005 x f(GHz)

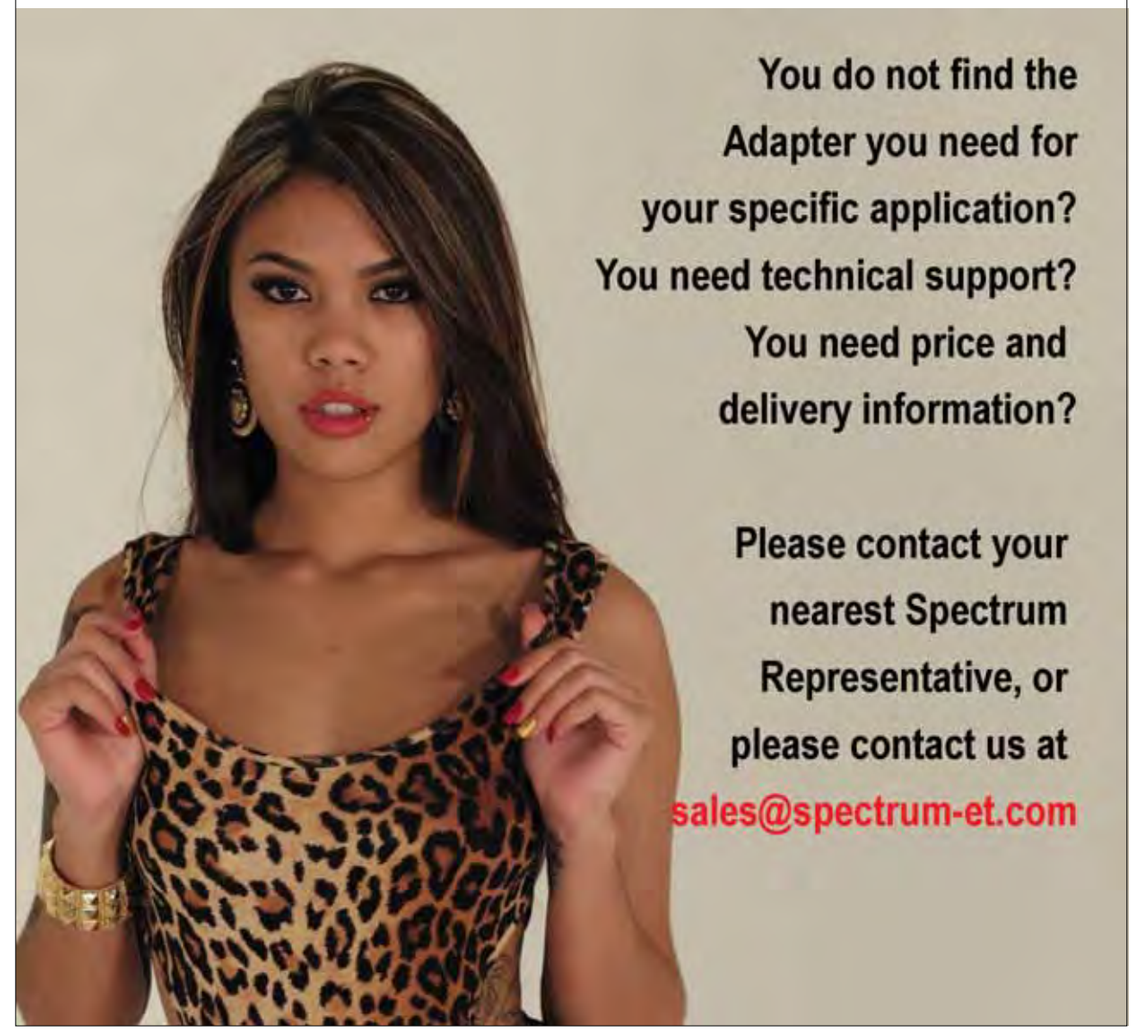

Dimensions shown are Inches over Millimeters or vice versa. Standard units have stainless finish (last 2 digits of the P/N are -02). Interfaces are per DIN 47 223, DIN 47 226, IEC 169-4, IEC 169-7, IEC 169-8, IEC 457-2, IEC 60169-5, IEEE 287, MIL-PRF-39012, MIL DTL-24044, MIL DTL-3643,MIL-STD-348B, where applicable

Spectrum Elektrotechnik GmbH
Germany
www.spectrum-et.com
sales@spectrum-et.com
Phone: +49 / 89 / 35 48 04 0
Fax: +49 / 89 / 35 48 04 90

Adapters, Attenuators, Blind Mate Connectors, Cable Assemblies, Connectors, Delay Lines, Duplexers Equalizers, Fine Grain Equalizers, Gain Amplitude Equalizers, Line Stretchers, Machines, Phase Adjusters, Push - On Connectors & Adapters, Quick Connections, Terminations (Coax-), Tools, Waveguide to Coax - Adapters & Transmissions, and.....

WG/Coax Adapters

Rectangular WG & Double Ridge WG, End Launched & Top Launched
Aluminum, Copper, Brass, All Standard Flanges available
WR 650 to WR 22, Frequency: 1.12 GHz to 50.0 GHz
Most Coax Connectors Series at NO Surcharge.

Spectrum Elektrotechnik GmbH
when Quality is needed

80905 Munich, Germany
P.O. Box 450533
Telephone: +49-89-3548-040
Facsimile: +49-89-3548-0490
WWW.SPECTRUM-ET.COM
Email: sales@spectrum-et.com

P

Q

In-Series SMA Reverse Sex

If your choice of SMA Reverse Sex Adapter is not shown in this section, please refer to the Table below to determine other possible locations. Should you not find your adapter listed in any section, please consult the factory or your Spectrum Elektrotechnik Area Representative.

SMA Reverse Sex	Section	Page
SMA Reverse Sex Overview & Specifications	Q	1
SMA Reverse Sex Between-Series to SMA		4

Although our catalog incorporates a very comprehensive range of products, due to our program of continuous development, there is no way that it will contain every product we manufacture. Please consult the factory for the product you require.
To improve our Standard Products we reserve the right to make changes. Specifications are therefore subject to change without notice.

Dimensions shown are Inches over Millimeters or vice versa. Standard units have stainless finish (last 2 digits of the P/N are -02). Interfaces are per DIN 47 223, DIN 47 226, IEC 169-4, IEC 169-7, IEC 169-8, IEC 457-2, IEC 60169-5, IEEE 287, MIL-PRF-39012, MIL DTL-24044, MIL DTL-3643,MIL-STD-348B, where applicable

The specifications below are general specifications for all SMA connectors. Specific Data for VSWR, Insertion Loss, R.F. leakage, etc., are available from the factory upon request. Specifications in the following table are recommended for any procurement documents or drawings. In the event of any conflict between these specifications and General Specifications MIL-PRF-39012, these specifications shall govern. These specifications are subject to change according to the latest revision.

REQUIREMENT	GENERAL SPECIFICATIONS
Standard Materials	STEEL corrosion resistant 1.4305 per DIN EN 10088; ASTM-A582 (303), or 1.4404 (316L) respectively. ALUMINUM AlMg4.5Mn per DIN DIN EN 1706, AlMgSi0.5 per DIN EN 1706, AlMgSi1 per DIN EN 1706 (6061-T6 per QQ-A-225/8). BRASS CuZn39Pb3 per DIN 17660 (QQ-B-626 (ASTM-B124), half hard). COPPER BERYLLIUM 33-25 CuBe2PbH per DIN17666(DIN CEN/TS;DIN SPEC 9700)(QQ-C530). TFE Fluorocarbon per DIN 52900 (ASTM-D-1710) SILICONE RUBBER per DIN ISO 3601)(A-A-59588,Class IIB) Gr. 50 - 75. BORIUM NITRITE Dielectric for high power applications per in-house specification
Finish for COPPER BERYLLIUM STAINLESS STEEL ALUMINUM BRASS VARIOUS	Center Contacts shall be gold plated to a minimum thickness of .00005-inch in accordance with ASTM-B-488, Type III, Code C, Class 1.25 shall be passivated per ASTM-A967 Conductive Parts shall have an iridited finish per MIL-DTL-5541 Other parts, such as Coupling Nuts and Back-Bodies shall be anodized per MIL-A-8625. .00003 inch (0.8 µm) min. gold plating per MIL-DTL-45204, or nickel plating per QQ-N-290, as specified. Imoloy .0001 inch (2.5 µm) min. plating, consisting of 55% Copper / 20% Zinc / 25% Tin (on special request).
Design	The design shall be such that the outline dimensions in this catalog are met. In addition, the assembled connector shall meet the interface dimensions.
ELECTRICAL	
Frequency Range	DC - 18.0 GHz min.
Insulation Resistance	The insulation resistance shall not be less than 5,000 megohms.
Voltage Standing Wave Ratio (VSWR)	1.06 + .005 * f (GHz)
Contact Resistance	The center contact resistance drop shall not exceed 3.0 milliohms and the outer contact resistance drop shall not exceed 2.0 milliohms.
Dielectric Withstanding Voltage	The magnitude of the test voltage shall be 1,000 volts rms at sea level.
RF High Potential Withstanding Voltage	The RF high potential withstanding voltage is 760 volts rms at 5 MHz. Leakage is not applicable.
RF Leakage	- (90 - f (GHz)) dB
Insertion Loss	(.05 SQT(f(GHz))) dB
MECHANICAL	
Connector Durability	The connector is to be tested and its mating connector shall be subjected to 500 insertions and withdrawal cycles at 12 cycles per minute max. The connector shall show no evidence of mechanical failure and the connector shall meet the mating characteristic requirements.
Cable Retention Force	60 pounds (267 N) min.
Coupling Nut Retention Force	Not applicable for Female connectors. For male connectors, the axial force is 100 lbs (445 N) max.. The torque is 15 inch-pounds (1.7 Nm) max.
Force to Engage and Disengage	The torque required to engage and disengage shall not exceed 2 inch-pounds (0.226 Nm).
Longitudinal Force max.	Longitudinal force is not applicable.
Mating Characteristics	See interface dimensions shown on next page. Applicable to Females only: oversize pin .0376 inch (.955 mm) max. dia. pin; .045 inch (1.14 mm) deep; insertion force 3 lbs. (13.34 N) max. with .037 inch (.94 mm) min. dia. pin; withdrawal force 1.00 oz (.278 N) min. with .0355 inch (.90 mm) max. dia. pin.
Recommended Mating Torque	7 - 10 inch-pounds (0.8 - 1.13 Nm)
ENVIRONMENTAL	
Corrosion (Salt Spray)	Specification MIL-STD-202, Method 101, Test Condition B. The salt solution shall be 5%.
Vibration	Specification MIL-STD-202, Method 204, Test Condition D.
Shock	Specification MIL-STD-202, Method 213, Test Condition I.
Thermal Shock	Specification MIL-STD-202, Method 107, Test Condition B, except high temperature shall be + 200°C.
Moisture Resistance	Specification MIL-STD-202, Method 106. Step 7b (vibration) shall be omitted. Insulation resistance shall be 200 megohms min. within 5 minutes of removal from humidity.
Corona Level	The connector shall not exhibit breakdown (corona) when the applied voltage is 375 volts rms and the altitude is 70,000 feet.

Dimensions shown are Inches over Millimeters or vice versa. Standard units have stainless finish (last 2 digits of the P/N are -02). Interfaces are per DIN 47 223, DIN 47 226, IEC 169-4, IEC 169-7, IEC 169-8, IEC 457-2, IEC 60169-5, IEEE 287, MIL-PRF-39012, MIL DTL-24044, MIL DTL-3643,MIL-STD-348B, where applicable

Spectrum Elektrotechnik GmbH
Germany
www.spectrum-et.com
sales@spectrum-et.com
Phone: +49 / 89 / 35 48 04 0
Fax: +49 / 89 / 35 48 04 90

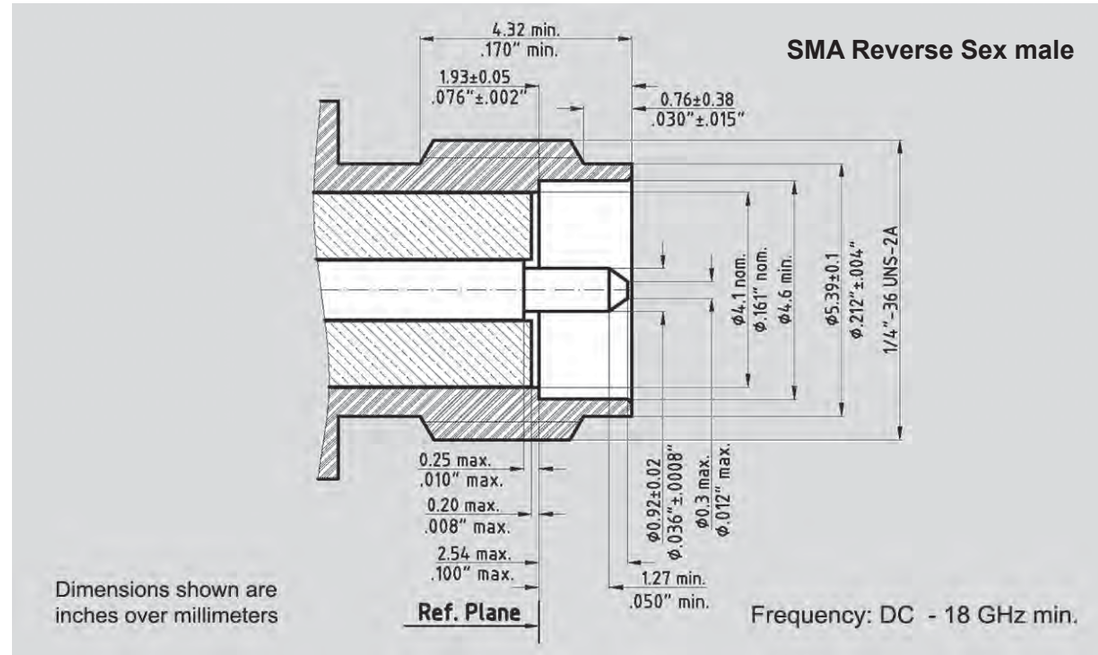

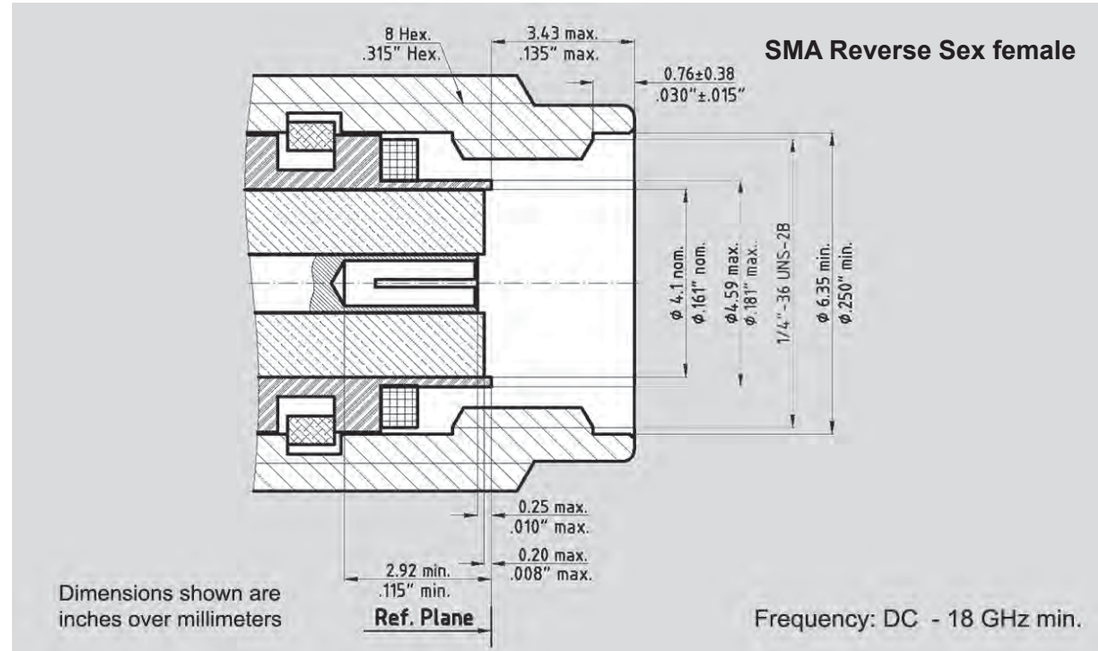

Dimensions shown are Inches over Millimeters or vice versa. Standard units have stainless finish (last 2 digits of the P/N are -02). Interfaces are per DIN 47 223, DIN 47 226, IEC 169-4, IEC 169-7, IEC 169-8, IEC 457-2, IEC 60169-5, IEEE 287, MIL-PRF-39012, MIL DTL-24044, MIL DTL-3643,MIL-STD-348B, where applicable

Spectrum Elektrotechnik GmbH
Germany
www.spectrum-et.com
sales@spectrum-et.com
Phone: +49 / 89 / 35 48 04 0
Fax: +49 / 89 / 35 48 04 90

Part - No.	8R21-2121-02
Connectors	SMA-f. Rev.Sex to SMA-f.
Frequency	DC - 18.0 GHz
VSWR max.	1.06 + 0.005 x f(GHz)

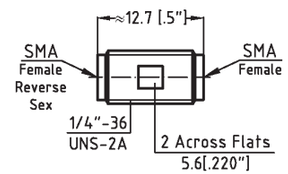

Q

Part - No.	8R11-1121-02
Connectors	SMA-m. Rev.Sex to SMA-f.
Frequency	DC - 18.0 GHz
VSWR max.	1.06 + 0.005 x f(GHz)

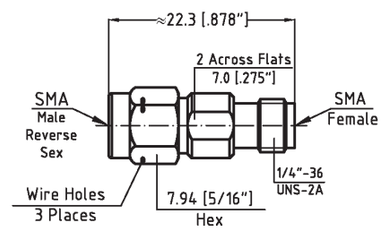

Part - No.	8R21-1121-02
Connectors	SMA-f. Rev.Sex to SMA-m.
Frequency	DC - 18.0 GHz
VSWR max.	1.06 + 0.005 x f(GHz)

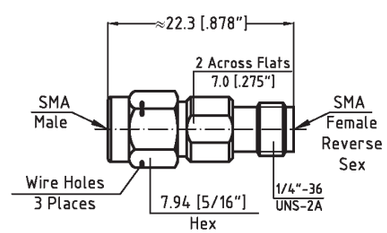

Part - No.	8003-RM21-02
Connectors	SMA-m. Rev.Sex to SMA-f.
Frequency	DC - 18.0 GHz
VSWR max.	1.06 + 0.005 x f(GHz)

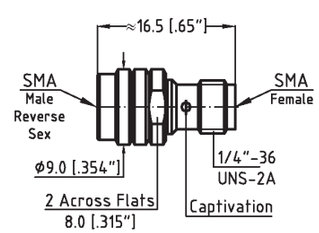

Dimensions shown are Inches over Millimeters or vice versa. Standard units have stainless finish (last 2 digits of the P/N are -02). Interfaces are per DIN 47 223, DIN 47 226, IEC 169-4, IEC 169-7, IEC 169-8, IEC 457-2, IEC 60169-5, IEEE 287, MIL-PRF-39012, MIL DTL-24044, MIL DTL-3643,MIL-STD-348B, where applicable

Spectrum Elektrotechnik GmbH
Germany
www.spectrum-et.com
sales@spectrum-et.com
Phone: +49 / 89 / 35 48 04 0
Fax: +49 / 89 / 35 48 04 90

Part - No.	8R11-1111-02
Connectors	SMA-m. Rev.Sex to SMA-m
Frequency	DC - 18.0 GHz
VSWR max.	1.06 + 0.005 x f(GHz)

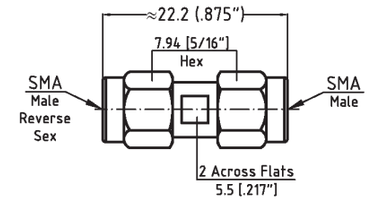

Q

Part - No.	8091-S001-02
Connectors	SMA-m. Rev.Sex to SMA-f.
Frequency	DC - 18.0 GHz
VSWR max.	1.06 + 0.005 x f(GHz)

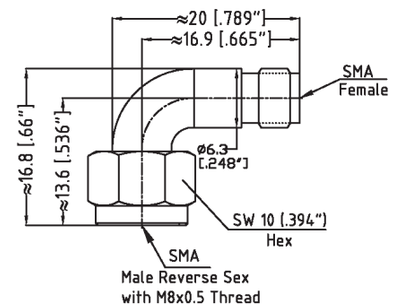

Dimensions shown are Inches over Millimeters or vice versa. Standard units have stainless finish (last 2 digits of the P/N are -02). Interfaces are per DIN 47 223, DIN 47 226, IEC 169-4, IEC 169-7, IEC 169-8, IEC 457-2, IEC 60169-5, IEEE 287, MIL-PRF-39012, MIL DTL-24044, MIL DTL-3643,MIL-STD-348B, where applicable

Spectrum Elektrotechnik GmbH
Germany
www.spectrum-et.com
sales@spectrum-et.com
Phone: +49 / 89 / 35 48 04 0
Fax: +49 / 89 / 35 48 04 90

Q

R

In-Series and Between-Series Adapters SMP

If your choice of SMP Adapter is not shown in this section, please refer to the Table below to determine other possible locations. Should you not find your adapter listed in any section, please consult the factory or your Spectrum Elektrotechnik Area Representative.

SMP	Section	Page
SMP Overview & Specifications	R	1
SMP In-Series		4
Between Series SMP to 2.4mm		12
Between Series SMP to 2.92mm		12
Between Series SMP to 7mm		15
Between Series SMP to SMA		16

Although our catalog incorporates a very comprehensive range of products, due to our program of continuous development, there is no way that it will contain every product we manufacture. Please consult the factory for the product you require.
To improve our Standard Products we reserve the right to make changes. Specifications are therefore subject to change without notice.

Dimensions shown are Inches over Millimeters or vice versa. Standard units have stainless finish (last 2 digits of the P/N are -02). Interfaces are per DIN 47 223, DIN 47 226, IEC 169-4, IEC 169-7, IEC 169-8, IEC 457-2, IEC 60169-5, IEEE 287, MIL-PRF-39012, MIL DTL-24044, MIL DTL-3643,MIL-STD-348B, where applicable

SMP Specifications

The specifications below are general specifications for all SMP connectors. Specific Data for VSWR, Insertion loss, R.F. leakage etc., are available from the factory upon request. Specifications in the following table are recommended for any procurement documents or drawings. In the event of any conflict between these specifications DESCC 94007 & DESCC 94008 and other documentation, these specifications shall govern. These specifications are subject to change according to the latest revision.

REQUIREMENT	GENERAL SPECIFICATIONS
Standard Materials	STEEL corrosion resistant 1.4305 per DIN EN 10088; ASTM-A582 (303), or 1.4404 (316L) respectively. ALUMINUM AlMg4.5Mn per DIN DIN EN 1706, AlMgSi0.5 per DIN EN 1706, AlMgSi1 per DIN EN 1706 (6061-T6 per QQ-A-225/8). BRASS CuZn39Pb3 per DIN 17660 (QQ-B-626 (ASTM-B124), half hard). COPPER BERYLLIUM 33-25 CuBe2PbH per DIN17666(DIN CEN/TS;DIN SPEC 9700)(QQ-C530). TFE Fluorocarbon per DIN 52900 (ASTM-D-1710), or Thermoplast per DIN EN ISO 10350, or PEI per in-house specification respectively for higher temperature applications. SILICONE RUBBER per DIN ISO 3601)(A-A-59588,Class IIB) Gr. 50 - 75. BORIUM NITRITE Dielectric for high power applications per in-house specification
Finish for COPPER BERYLLIUM STAINLESS STEEL ALUMINUM BRASS VARIOUS	Center Contacts shall be gold plated to a minimum thickness of .00005-inch in accordance with ASTM-B-488, Type III, Code C, Class 1.25 shall be passivated per ASTM-A967 Conductive Parts shall have an iridited finish per MIL-DTL-5541 Other parts, such as Coupling Nuts and Back-Bodies shall be anodized per MIL-A-8625. .00003 inch (0.8 µm) min. gold plating per MIL-DTL-45204, or nickel plating per QQ-N-290, as specified. Imoloy .0001 inch (2.5 µm) min. plating, consisting of 55% Copper / 20% Zinc / 25% Tin (on special request).
Design	The design shall be such that the outline dimensions in this catalog are met. In addition, the assembled connector shall meet the interface dimensions.
ELECTRICAL	
Impedance	50 Ohms
Frequency Range	DC - 40.0 GHz min.
Insulation Resistance	The insulation resistance shall not be less than 5.000 megaohms.
Voltage Standing Wave Ratio (VSWR)	1.06 + 0.005 x f(GHz)
Contact Resistance	The center contact resistance drop is 6.0 milliohms max.
Dielectric Withstanding Voltage	The magnitude of the test voltage shall be 500 volts rms at sea level.
RF High Potential Withstanding Voltage	The RF high potential withstanding voltage is 325 volts rms at 5 MHz. Leakage is not applicable.
RF Leakage	80 dB max @ 3 GHz, approx. 60 dB @ 26.5 GHz
Insertion Loss	(.10 SQT(f(GHz))) dB
MECHANICAL	
Connector Durability	The connector is to be tested and its mating connector shall be subjected to 100 insertions min.. Withdrawal cycles /minute are not applicable. The connector shall show no evidence of mechanical failure and the connector shall meet the mating characteristic requirements.
Cable Retention Force	Not applicable.
Coupling Nut Retention Force	Not applicable.
Force to Engage and Disengage	The force to engage shall be max.15 lbs.(66.7 N)(full detent); 10 lbs.(44.5 N)(lim. detent); 2 lbs.(8.9 N)(smooth bore) The disengage force shall be min. 5 lbs.(22.2 N)(full detent); 2 lbs.(8.9 N)(lim. detent); 0.5 lbs.(2.22 N)(smooth bore)
Axial Misalignmemnt	0/-0.25mm (may affect VSWR)
Radial Misalignment	approx. 4°
Recommended Mating Torque	Recommended Mating Torque is not applicable.
ENVIRONMENTAL	
Corrosion (Salt Spray)	Specification MIL-STD-202, Method 101, Test Condition B. The salt solution shall be 5%.
Vibration	Specification MIL-STD-202, Method 204, Test Condition B.
Shock	Specification MIL-STD-202, Method 213, Test Condition I.
Thermal Shock	Specification MIL-STD-202, Method 107, Test Condition B, except high temperature shall be + 200°C.
Moisture Resistance	Specification MIL-STD-202, Method 106. Step 7b (vibration) shall be omitted. Insulation resistance shall be 200 megohms min. within 5 minutes of removal from humidity.
Corona Level	The connector shall not exhibit breakdown (corona) when the applied voltage is 2800 volts rms and the altitude is 0 feet.

Dimensions shown are Inches over Millimeters or vice versa. Standard units have stainless finish (last 2 digits of the P/N are -02). Interfaces are per DIN 47 223, DIN 47 226, IEC 169-4, IEC 169-7, IEC 169-8, IEC 457-2, IEC 60169-5, IEEE 287, MIL-PRF-39012, MIL DTL-24044, MIL DTL-3643,MIL-STD-348B, where applicable

Spectrum Elektrotechnik GmbH
Germany
www.spectrum-et.com
sales@spectrum-et.com
Phone: +49 / 89 / 35 48 04 0
Fax: +49 / 89 / 35 48 04 90

Interface Dimensions SMP (Per MIL-STD-348)

SMP Female

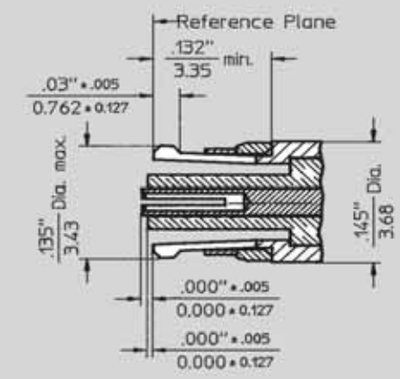

SMP Male full detent

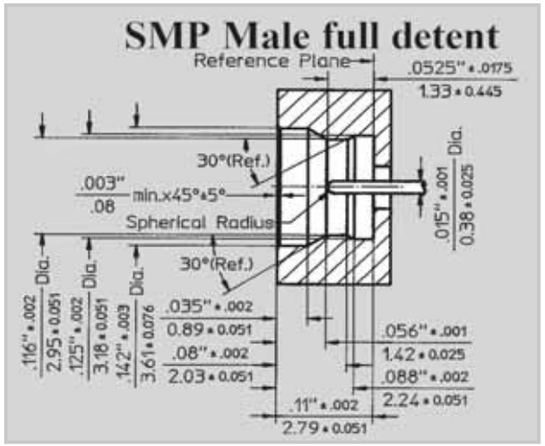

SMP Male limited detent

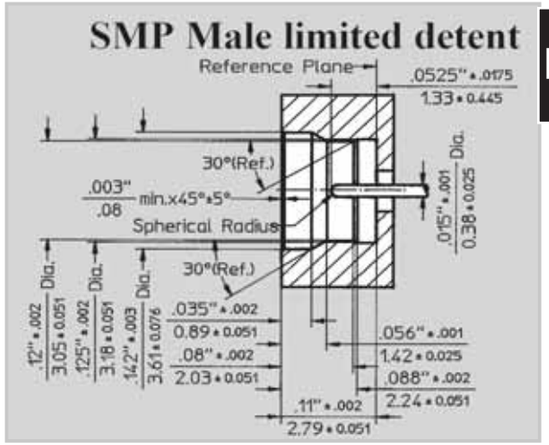

SMP Male smooth bore

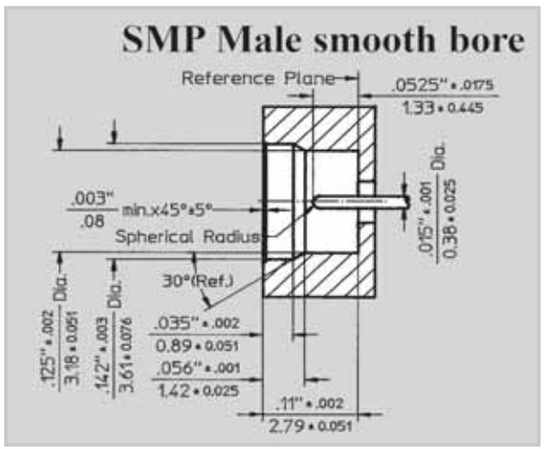

SMP Male

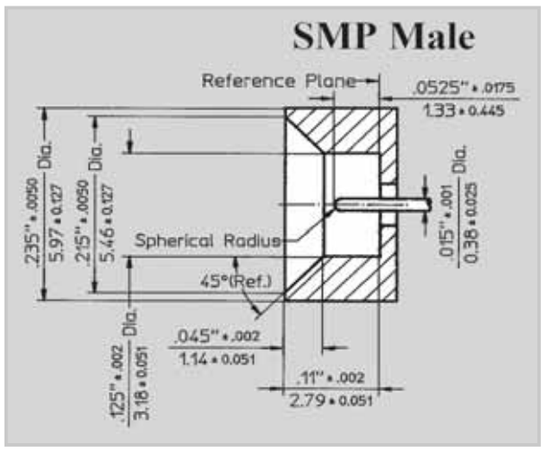

Dimensions shown are Inches over Millimeters or vice versa. Standard units have stainless finish (last 2 digits of the P/N are -02). Interfaces are per DIN 47 223, DIN 47 226, IEC 169-4, IEC 169-7, IEC 169-8, IEC 457-2, IEC 60169-5, IEEE 287, MIL-PRF-39012, MIL DTL-24044, MIL DTL-3643,MIL-STD-348B, where applicable

Spectrum Elektrotechnik GmbH
Germany
www.spectrum-et.com
sales@spectrum-et.com
Phone: +49 / 89 / 35 48 04 0
Fax: +49 / 89 / 35 48 04 90

Part - No.	8001-MPMP-04
Connectors	SMP-fem. to SMP-fem.
Frequency	DC - 40.0 GHz
VSWR max.	1.06 + 0.005 x f(GHz)

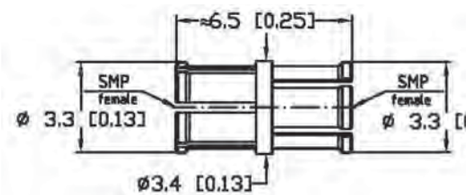

Part - No.	8003-MPMP-04
Connectors	SMP-fem. to SMP-fem.
Frequency	DC - 40.0 GHz
VSWR max.	1.06 + 0.005 x f(GHz)

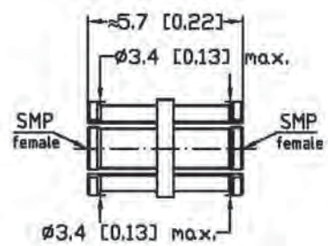

Part - No.	8004-MPMP-04
Connectors	SMP-fem. to SMP-fem.
Frequency	DC - 40.0 GHz
VSWR max.	1.06 + 0.005 x f(GHz)

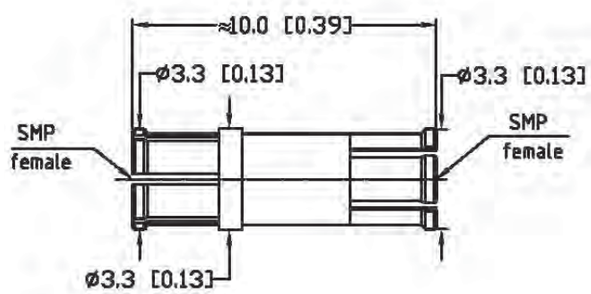

Part - No.	8005-MPMP-04
Connectors	SMP-fem. to SMP-fem.
Frequency	DC - 40.0 GHz
VSWR max.	1.06 + 0.005 x f(GHz)

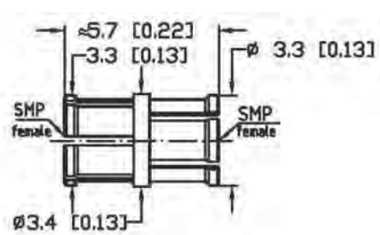

Dimensions shown are Inches over Millimeters or vice versa. Standard units have stainless finish (last 2 digits of the P/N are -02). Interfaces are per DIN 47 223, DIN 47 226, IEC 169-4, IEC 169-7, IEC 169-8, IEC 457-2, IEC 60169-5, IEEE 287, MIL-PRF-39012, MIL DTL-24044, MIL DTL-3643,MIL-STD-348B, where applicable

Spectrum Elektrotechnik GmbH
Germany
www.spectrum-et.com
sales@spectrum-et.com
Phone: +49 / 89 / 35 48 04 0
Fax: +49 / 89 / 35 48 04 90

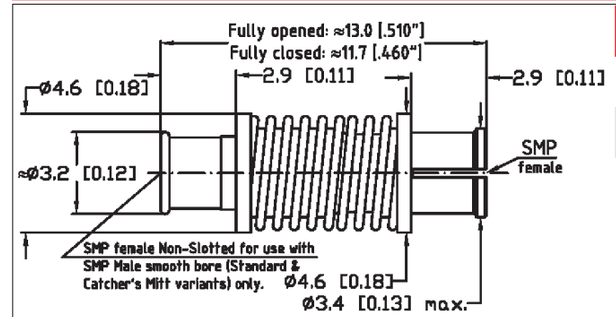

Part - No.	8007-MPMP-04
Connectors	SMP-fem. to SMP-fem.
Frequency	DC - 18.0 GHz
VSWR max.	1.06 + 0.009 x f(GHz)

Spring loaded bullet

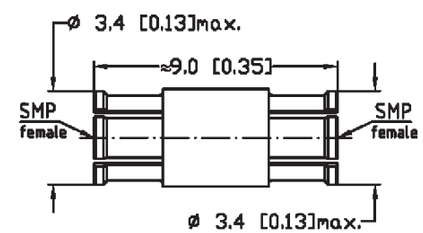

Part - No.	8008-MPMP-04
Connectors	SMP-fem. to SMP-fem.
Frequency	DC - 40.0 GHz
VSWR max.	1.06 + 0.005 x f(GHz)

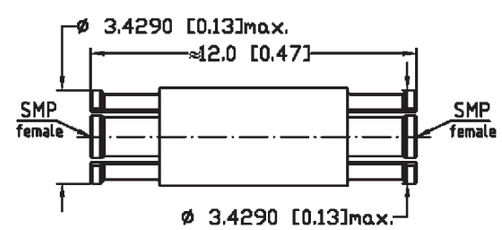

Part - No.	8009-MPMP-04
Connectors	SMP-fem. to SMP-fem.
Frequency	DC - 40.0 GHz
VSWR max.	1.06 + 0.005 x f(GHz)

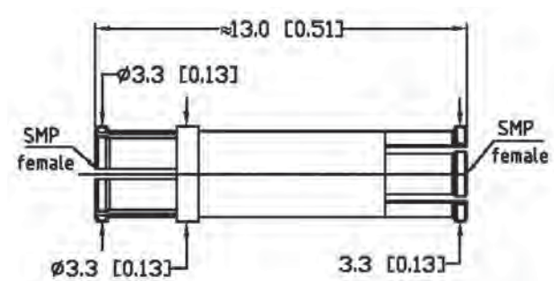

Part - No.	8010-MPMP-04
Connectors	SMP-fem. to SMP-fem.
Frequency	DC - 40.0 GHz
VSWR max.	1.06 + 0.005 x f(GHz)

Dimensions shown are Inches over Millimeters or vice versa. Standard units have stainless finish (last 2 digits of the P/N are -02). Interfaces are per DIN 47 223, DIN 47 226, IEC 169-4, IEC 169-7, IEC 169-8, IEC 457-2, IEC 60169-5, IEEE 287, MIL-PRF-39012, MIL DTL-24044, MIL DTL-3643,MIL-STD-348B, where applicable

Spectrum Elektrotechnik GmbH
Germany
www.spectrum-et.com
sales@spectrum-et.com
Phone: +49 / 89 / 35 48 04 0
Fax: +49 / 89 / 35 48 04 90

Part - No.	8011-MPMP-04
Connectors	SMP-fem. to SMP-fem.
Frequency	DC - 40.0 GHz
VSWR max.	1.06 + 0.009 x f(GHz)

Spring loaded bullet

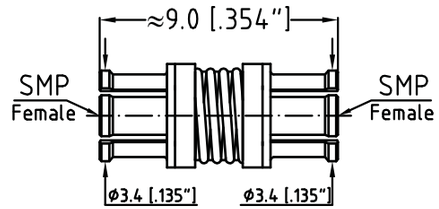

Part - No.	8012-MPMP-04
Connectors	SMP-fem. to SMP-fem.
Frequency	DC - 40.0 GHz
VSWR max.	1.06 + 0.009 x f(GHz)

Spring loaded bullet

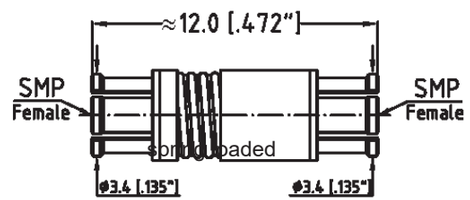

Part - No.	8013-MPMP-04
Connectors	SMP-fem. to SMP-fem.
Frequency	DC - 40.0 GHz
VSWR max.	1.06 + 0.009 x f(GHz)

Spring loaded bullet

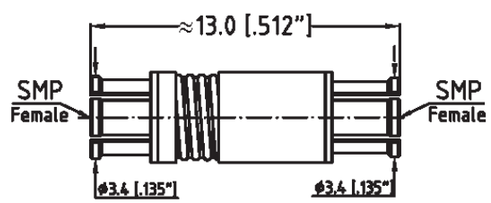

You do not find the Adapter you need for an application? You need technical support? You need price and delivery information? Please contact your nearest Spectrum Representative, or please contact us direct.

Telephone: +49-89-3548-040 Facsimile: +49-89-3548-0490
e-mail: sales@spectrum-et.com www.spectrum-et.com

Dimensions shown are Inches over Millimeters or vice versa. Standard units have stainless finish (last 2 digits of the P/N are -02). Interfaces are per DIN 47 223, DIN 47 226, IEC 169-4, IEC 169-7, IEC 169-8, IEC 457-2, IEC 60169-5, IEEE 287, MIL-PRF-39012, MIL DTL-24044, MIL DTL-3643,MIL-STD-348B, where applicable

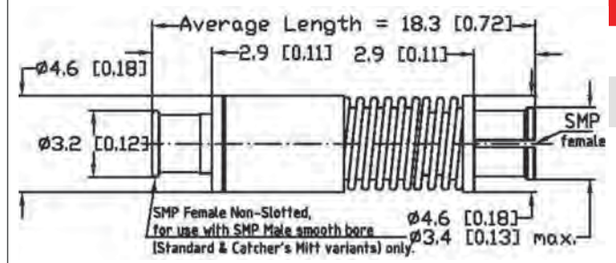

Part - No.	8015-MPMP-04
Connectors	SMP-fem. to SMP-fem.
Frequency	DC - 18.0 GHz
VSWR max.	1.06 + 0.009 x f(GHz)

Spring loaded bullet

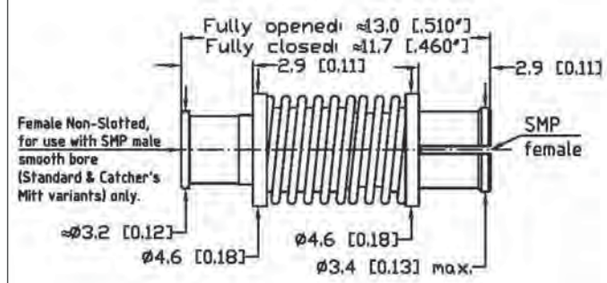

Part - No.	8016-MPMP-04
Connectors	SMP-fem. to SMP-fem.
Frequency	DC - 18.0 GHz
VSWR max.	1.06 + 0.009 x f(GHz)

Spring loaded bullet

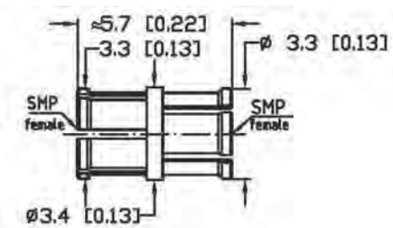

Part - No.	8017-MPMP-04
Connectors	SMP-fem. to SMP-fem.
Frequency	DC - 40.0 GHz
VSWR max.	1.06 + 0.005 x f(GHz)

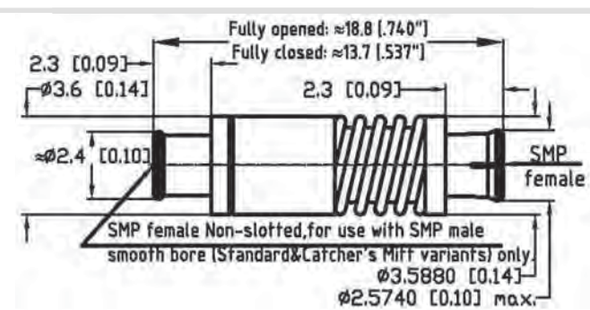

Part - No.	8018-MPMP-04
Connectors	SMP-fem. to SMP-fem.
Frequency	DC - 18.0 GHz
VSWR max.	1.06 + 0.009 x f(GHz)

Spring loaded bullet

Dimensions shown are Inches over Millimeters or vice versa. Standard units have stainless finish (last 2 digits of the P/N are -02). Interfaces are per DIN 47 223, DIN 47 226, IEC 169-4, IEC 169-7, IEC 169-8, IEC 457-2, IEC 60169-5, IEEE 287, MIL-PRF-39012, MIL DTL-24044, MIL DTL-3643,MIL-STD-348B, where applicable

Part - No.	8002-MJMP-04
Connectors	SMP-fem. to SMP-male
Frequency	DC - 40.0 GHz
VSWR max.	1.06 + 0.005 x f(GHz)
Coupling	Full Detent

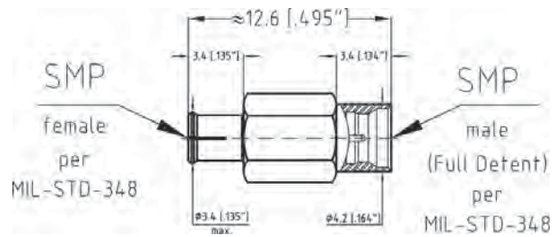

Part - No.	8003-MJMP-04
Connectors	SMP-fem. to SMP-male
Frequency	DC - 40.0 GHz
VSWR max.	1.06 + 0.005 x f(GHz)
Coupling	Limited Detent

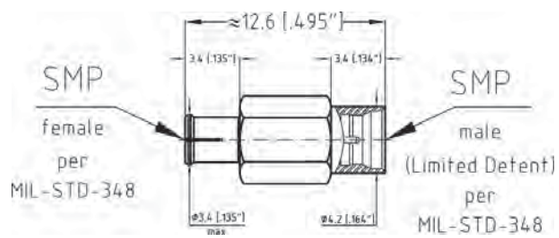

Part - No.	8004-MJMP-04
Connectors	SMP-fem. to SMP-male
Frequency	DC - 40.0 GHz
VSWR max.	1.06 + 0.005 x f(GHz)
Coupling	Smooth Bore

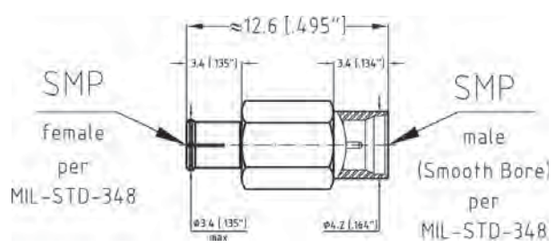

Although our catalog incorporates a very comprehensive range of products, due to our program of continuous development, there is no way that it will contain every product we manufacture. Please consult the factory for the product you require.

Telephone: +49-89-3548-040 Facsimile: +49-89-3548-0490
E-mail: sales@spectrum-et.com www.spectrum-et.com

Dimensions shown are Inches over Millimeters or vice versa. Standard units have stainless finish (last 2 digits of the P/N are -02). Interfaces are per DIN 47 223, DIN 47 226, IEC 169-4, IEC 169-7, IEC 169-8, IEC 457-2, IEC 60169-5, IEEE 287, MIL-PRF-39012, MIL DTL-24044, MIL DTL-3643,MIL-STD-348B, where applicable

In-Series Adapters SMP-fem. to SMP-male

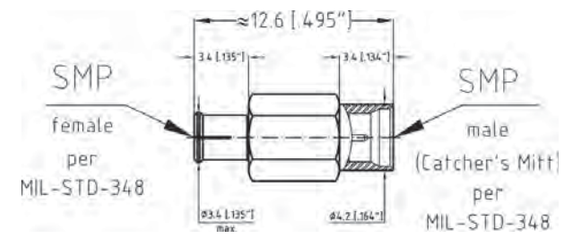

Part - No.	8005-MJMP-04
Connectors	SMP-fem. to SMP-male
Frequency	DC - 40.0 GHz
VSWR max.	1.06 + 0.005 x f(GHz)
Coupling	Catcher's Mitt

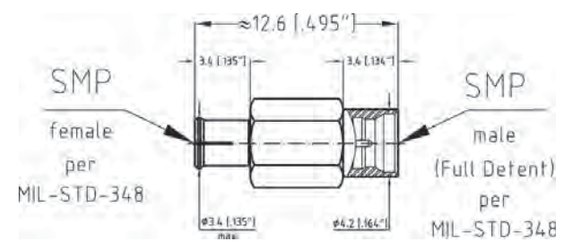

Part - No.	8006-MJMP-04
Connectors	SMP-fem. to SMP-male
Frequency	DC - 20.0 GHz
VSWR max.	1.06 + 0.005 x f(GHz)
Coupling	Full Detent

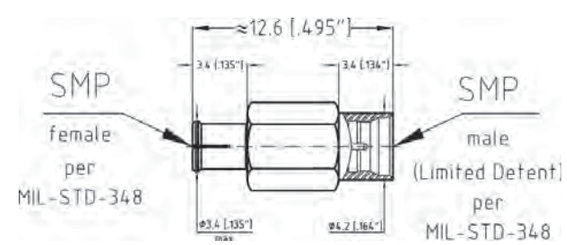

Part - No.	8007-MJMP-04
Connectors	SMP-fem. to SMP-male
Frequency	DC - 20.0 GHz
VSWR max.	1.06 + 0.005 x f(GHz)
Coupling	Limited Detent

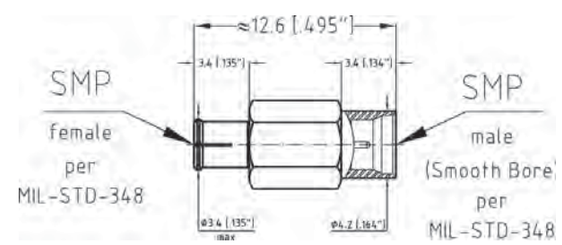

Part - No.	8008-MJMP-04
Connectors	SMP-fem. to SMP-male
Frequency	DC - 20.0 GHz
VSWR max.	1.06 + 0.005 x f(GHz)
Coupling	Smooth Bore

Dimensions shown are Inches over Millimeters or vice versa. Standard units have stainless finish (last 2 digits of the P/N are -02). Interfaces are per DIN 47 223, DIN 47 226, IEC 169-4, IEC 169-7, IEC 169-8, IEC 457-2, IEC 60169-5, IEEE 287, MIL-PRF-39012, MIL DTL-24044, MIL DTL-3643,MIL-STD-348B, where applicable

Part - No.	8009-MJMP-04
Connectors	SMP-fem. to SMP-male
Frequency	DC - 20.0 GHz
VSWR max.	1.06 + 0.005 x f(GHz)
Coupling	SMP-f/SMP-m Catcher's Mitt

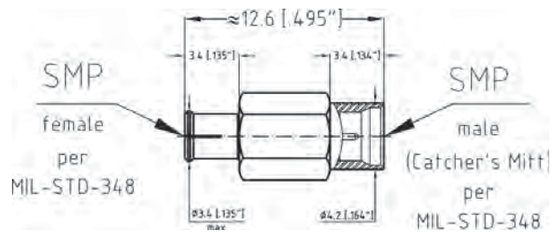

Part - No.	8001-MFMM-02
Connectors	SMP-male to SMP-male
Frequency	DC - 40.0 GHz
VSWR max.	1.06 + 0.005 x f(GHz)
Coupling	Full Detent/Catcher's Mitt

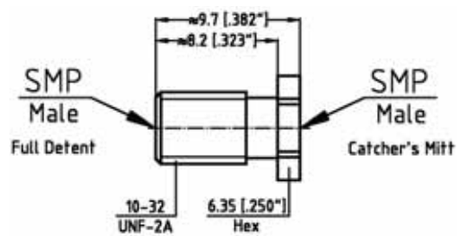

Part - No.	8002-MJMJ-02
Connectors	SMP-male to SMP-male
Frequency	DC - 40.0 GHz
VSWR max.	1.06 + 0.005 x f(GHz)
Coupling	Full Detent/Catcher's Mitt

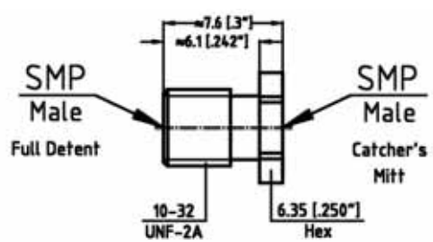

Although our catalog incorporates a very comprehensive range of products, due to our program of continuous development, there is no way that it will contain every product we manufacture. Please consult the factory for the product you require.

Dimensions shown are Inches over Millimeters or vice versa. Standard units have stainless finish (last 2 digits of the P/N are -02). Interfaces are per DIN 47 223, DIN 47 226, IEC 169-4, IEC 169-7, IEC 169-8, IEC 457-2, IEC 60169-5, IEEE 287, MIL-PRF-39012, MIL DTL-24044, MIL DTL-3643,MIL-STD-348B, where applicable

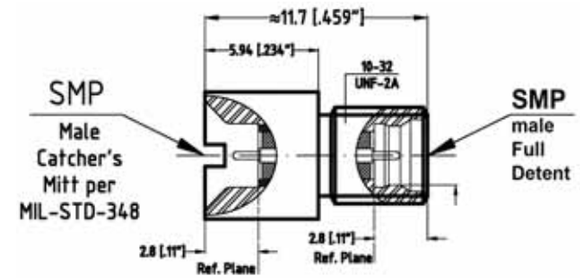

Part - No.	8003-MJMJ-02
Connectors	SMP-male to SMP-male
Frequency	DC - 40.0 GHz
VSWR max.	1.06 + 0.005 x f(GHz)
Coupling	Catcher's Mitt/Full Detent

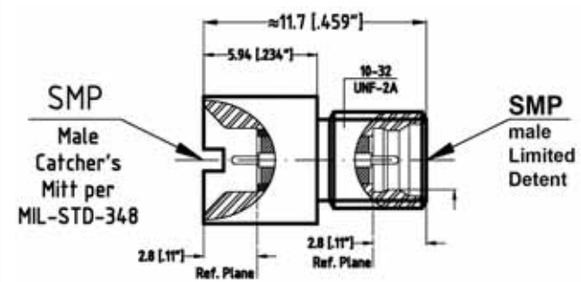

Part - No.	8004-MJMJ-02
Connectors	SMP-male to SMP-male
Frequency	DC - 40.0 GHz
VSWR max.	1.06 + 0.005 x f(GHz)
Coupling	Catcher's Mitt/limited Detent

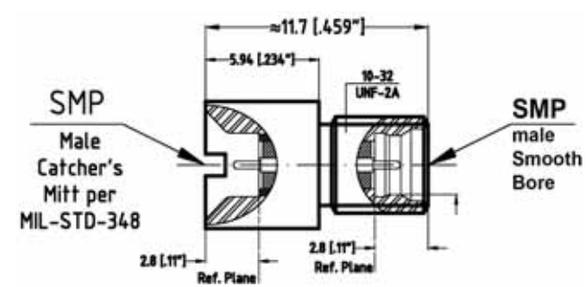

Part - No.	8005-MJMJ-02
Connectors	SMP-male to SMP-male
Frequency	DC - 40.0 GHz
VSWR max.	1.06 + 0.005 x f(GHz)
Coupling	Catcher's Mitt/Smooth Bore

You do not find the Adapter you need for an application? You need technical support? You need price and delivery information? Please contact your nearest Spectrum Representative, or please contact us direct.

Telephone: +49-89-3548-040 Facsimile: +49-89-3548-0490
e-mail: sales@spectrum-et.com www.spectrum-et.com

Dimensions shown are Inches over Millimeters or vice versa. Standard units have stainless finish (last 2 digits of the P/N are -02). Interfaces are per DIN 47 223, DIN 47 226, IEC 169-4, IEC 169-7, IEC 169-8, IEC 457-2, IEC 60169-5, IEEE 287, MIL-PRF-39012, MIL DTL-24044, MIL DTL-3643,MIL-STD-348B, where applicable

Part - No.	8801-HFAJ-42
Connectors	SMP-male to 2.4mm-fem.
Frequency	DC - 40.0 GHz
VSWR max.	1.06 + 0.005 x f(GHz)
Coupling	Smooth Bore

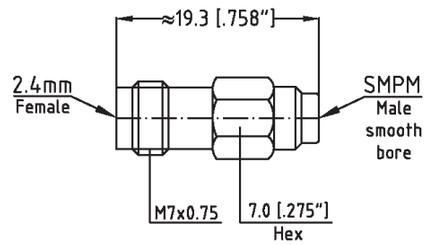

Part - No.	8001-KFMP-02
Connectors	SMP-fem. to 2.92mm-fem.
Frequency	DC - 40.0 GHz
VSWR max.	1.06 + 0.005 x f(GHz)

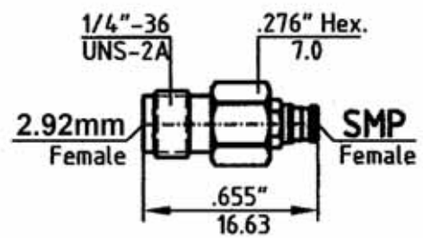

Part - No.	8001-KMMP-02
Connectors	SMP-fem. to 2.92mm-male
Frequency	DC - 40.0 GHz
VSWR max.	1.06 + 0.005 x f(GHz)

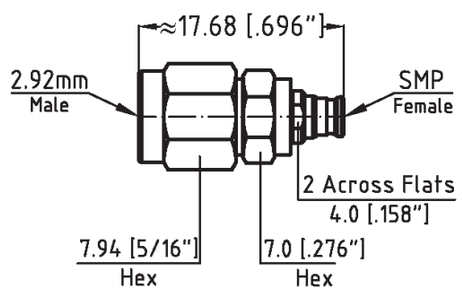

Although our catalog incorporates a very comprehensive range of products, due to our program of continuous development, there is no way that it will contain every product we manufacture. Please consult the factory for the product you require.

Dimensions shown are Inches over Millimeters or vice versa. Standard units have stainless finish (last 2 digits of the P/N are -02). Interfaces are per DIN 47 223, DIN 47 226, IEC 169-4, IEC 169-7, IEC 169-8, IEC 457-2, IEC 60169-5, IEEE 287, MIL-PRF-39012, MIL DTL-24044, MIL DTL-3643,MIL-STD-348B, where applicable

Spectrum Elektrotechnik GmbH
Germany
www.spectrum-et.com
sales@spectrum-et.com
Phone: +49 / 89 / 35 48 04 0
Fax: +49 / 89 / 35 48 04 90

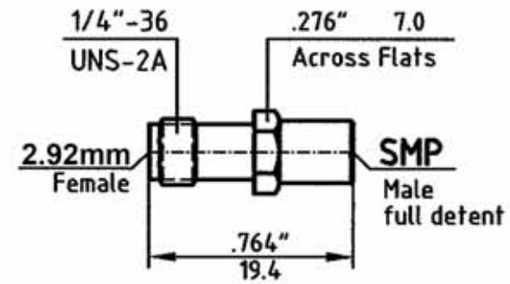

Part - No.	8001-KFMJ-02
Connectors	SMP-male to 2.92mm-fem.
Frequency	DC - 40.0 GHz
VSWR max.	1.06 + 0.005 x f(GHz)
Coupling	Full Detent

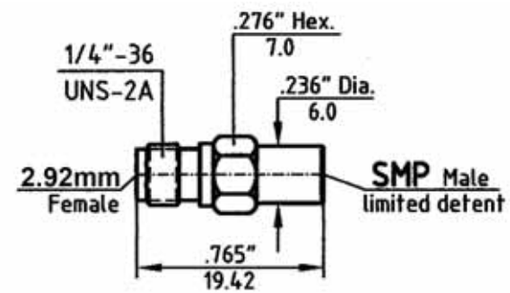

Part - No.	8002-KFMJ-02
Connectors	SMP-male to 2.92mm-fem.
Frequency	DC - 40.0 GHz
VSWR max.	1.06 + 0.005 x f(GHz)
Coupling	Limited Detent

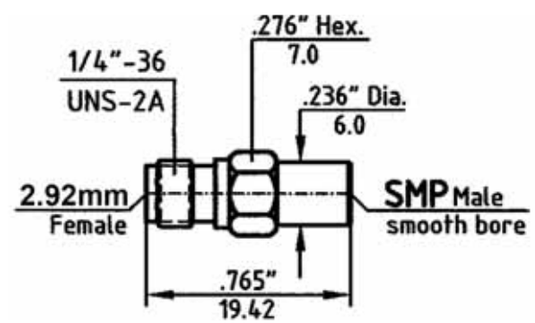

Part - No.	8003-KFMJ-02
Connectors	SMP-male to 2.92mm-fem.
Frequency	DC - 40.0 GHz
VSWR max.	1.06 + 0.005 x f(GHz)
Coupling	Smooth Bore

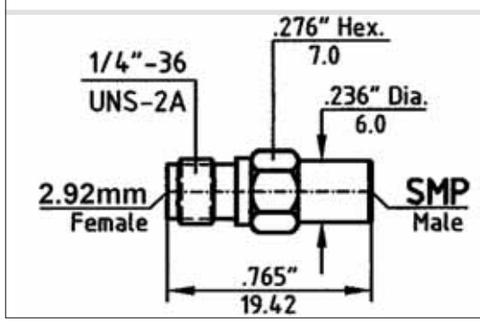

Part - No.	8004-KFMJ-02
Connectors	SMP-male to 2.92mm-fem.
Frequency	DC - 40.0 GHz
VSWR max.	1.06 + 0.005 x f(GHz)
Coupling	Catcher's Mitt

Dimensions shown are Inches over Millimeters or vice versa. Standard units have stainless finish (last 2 digits of the P/N are -02). Interfaces are per DIN 47 223, DIN 47 226, IEC 169-4, IEC 169-7, IEC 169-8, IEC 457-2, IEC 60169-5, IEEE 287, MIL-PRF-39012, MIL DTL-24044, MIL DTL-3643,MIL-STD-348B, where applicable

Spectrum Elektrotechnik GmbH
Germany
www.spectrum-et.com
sales@spectrum-et.com
Phone: +49 / 89 / 35 48 04 0
Fax: +49 / 89 / 35 48 04 90

Part - No.	8001-KMMJ-02
Connectors	SMP-male to 2.92mm-male
Frequency	DC - 40.0 GHz
VSWR max.	1.06 + 0.005 x f(GHz)
Coupling	Full Detent

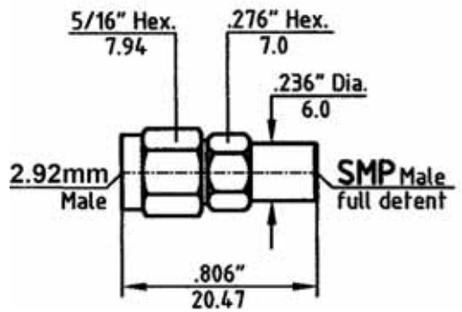

Part - No.	8002-KMMJ-02
Connectors	SMP-male to 2.92mm-male
Frequency	DC - 40.0 GHz
VSWR max.	1.06 + 0.005 x f(GHz)
Coupling	Limited Detent

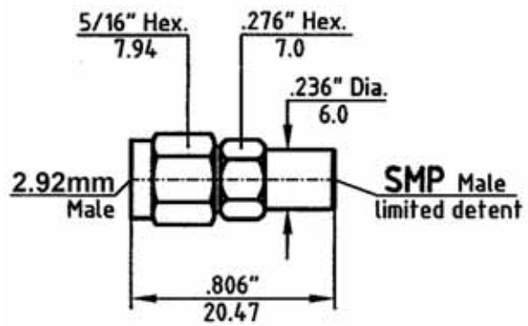

Part - No.	8003-KMMJ-02
Connectors	SMP-male to 2.92mm-male
Frequency	DC - 40.0 GHz
VSWR max.	1.06 + 0.005 x f(GHz)
Coupling	Smooth Bore

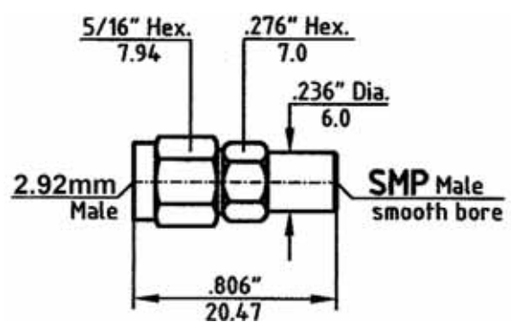

Part - No.	8004-KMMJ-02
Connectors	SMP-male to 2.92mm-male
Frequency	DC - 40.0 GHz
VSWR max.	1.06 + 0.005 x f(GHz)
Coupling	Catcher's Mitt

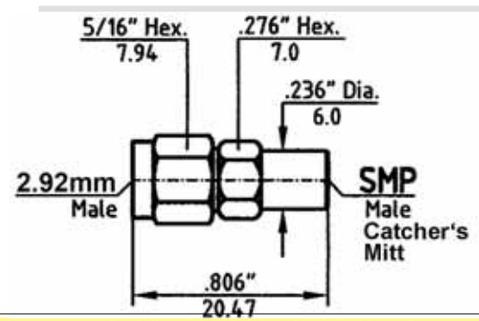

Dimensions shown are Inches over Millimeters or vice versa. Standard units have stainless finish (last 2 digits of the P/N are -02). Interfaces are per DIN 47 223, DIN 47 226, IEC 169-4, IEC 169-7, IEC 169-8, IEC 457-2, IEC 60169-5, IEEE 287, MIL-PRF-39012, MIL DTL-24044, MIL DTL-3643,MIL-STD-348B, where applicable

Spectrum Elektrotechnik GmbH
Germany
www.spectrum-et.com
sales@spectrum-et.com
Phone: +49 / 89 / 35 48 04 0
Fax: +49 / 89 / 35 48 04 90

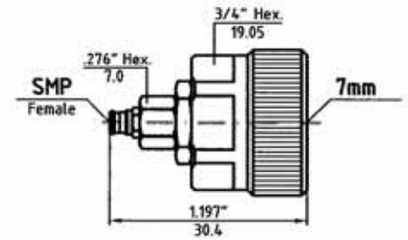

Part - No.	8001-MP90-02
Connectors	SMP-fem. to 7 mm
Frequency	DC - 18.0 GHz
VSWR max.	1.06 + 0.005 x f(GHz)

The Center Conductor of the 7 mm Connector is supplied with 4 slots. If you require 6 slots, Part Number changes to: **8001 - MP96 - 02**

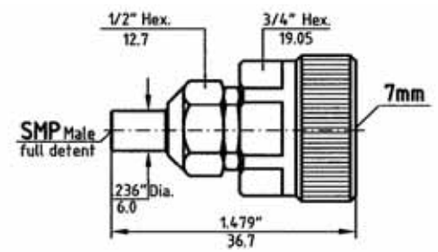

Part - No.	8001-MJ90-02
Connectors	SMP-male to 7 mm
Frequency	DC - 18.0 GHz
VSWR max.	1.06 + 0.005 x f(GHz)
Coupling	Full Detent

The Center Conductor of the 7 mm Connector is supplied with 4 slots. If you require 6 slots, Part Number changes to: **8001 - MJ96 - 02**

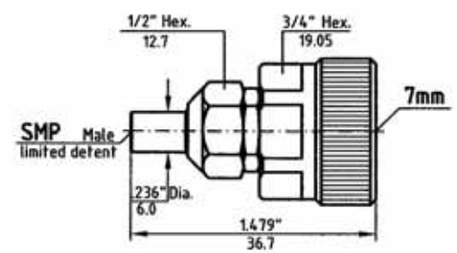

Part - No.	8002-MJ90-02
Connectors	SMP-male to 7 mm
Frequency	DC - 18.0 GHz
VSWR max.	1.06 + 0.005 x f(GHz)
Coupling	Limited Detent

The Center Conductor of the 7 mm Connector is supplied with 4 slots. If you require 6 slots, Part Number changes to: **8002 - MJ96 - 02**

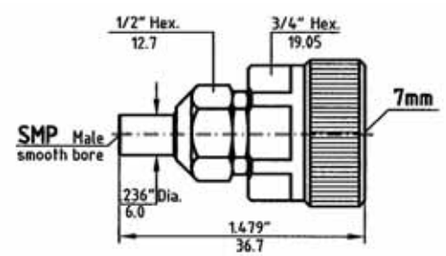

Part - No.	8003-MJ90-02
Connectors	SMP-male to 7 mm
Frequency	DC - 18.0 GHz
VSWR max.	1.06 + 0.005 x f(GHz)
Coupling	Smooth Bore

The Center Conductor of the 7 mm Connector is supplied with 4 slots. If you require 6 slots, Part Number changes to: **8003 - MJ96 - 02**

Dimensions shown are Inches over Millimeters or vice versa. Standard units have stainless finish (last 2 digits of the P/N are -02). Interfaces are per DIN 47 223, DIN 47 226, IEC 169-4, IEC 169-7, IEC 169-8, IEC 457-2, IEC 60169-5, IEEE 287, MIL-PRF-39012, MIL DTL-24044, MIL DTL-3643,MIL-STD-348B, where applicable

Spectrum Elektrotechnik GmbH
Germany
www.spectrum-et.com
sales@spectrum-et.com
Phone: +49 / 89 / 35 48 04 0
Fax: +49 / 89 / 35 48 04 90

Part - No.	8001-MP21-04
Connectors	SMP-fem. to SMA-fem.
Frequency	DC - 18.0 GHz
VSWR max.	1.06 + 0.005 x f(GHz)

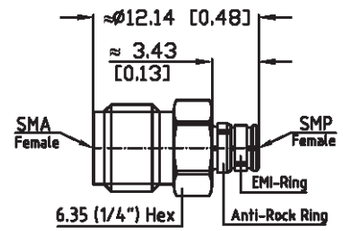

Part - No.	8003-MP21-04
Connectors	SMP-fem. to SMA-fem.
Frequency	DC - 18.0 GHz
VSWR max.	1.06 + 0.005 x f(GHz)

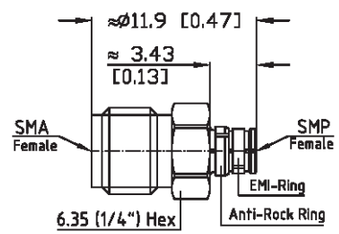

Part - No.	8002-MP21-02
Connectors	SMP-fem. to SMA-fem.
Frequency	DC - 18.0 GHz
VSWR max.	1.06 + 0.005 x f(GHz)

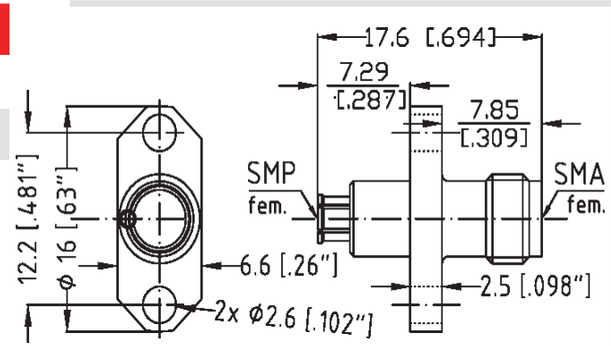

Part - No.	8004-MP21-02
Connectors	SMP-fem. to SMA-fem.
Frequency	DC - 18.0 GHz
VSWR max.	1.06 + 0.005 x f(GHz)

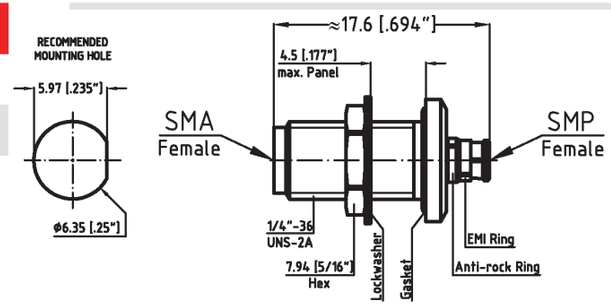

Dimensions shown are Inches over Millimeters or vice versa. Standard units have stainless finish (last 2 digits of the P/N are -02). Interfaces are per DIN 47 223, DIN 47 226, IEC 169-4, IEC 169-7, IEC 169-8, IEC 457-2, IEC 60169-5, IEEE 287, MIL-PRF-39012, MIL DTL-24044, MIL DTL-3643,MIL-STD-348B, where applicable

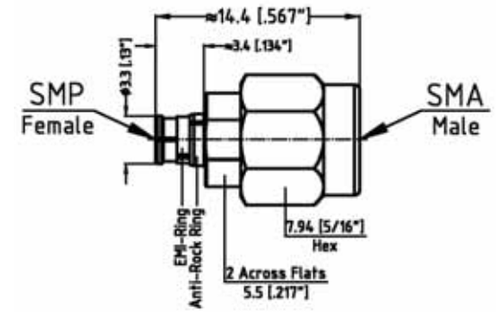

Part - No.	8002-MP11-02
Connectors	SMP-fem. to SMA-male
Frequency	DC - 18.0 GHz
VSWR max.	1.06 + 0.005 x f(GHz)

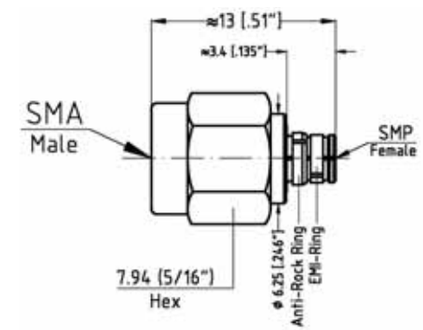

Part - No.	8001-MP11-04
Connectors	SMP-fem. to SMA-male
Frequency	DC - 18.0 GHz
VSWR max.	1.06 + 0.005 x f(GHz)

No wire holes in coupling nut

Coupling Nut is passivated stainless steel

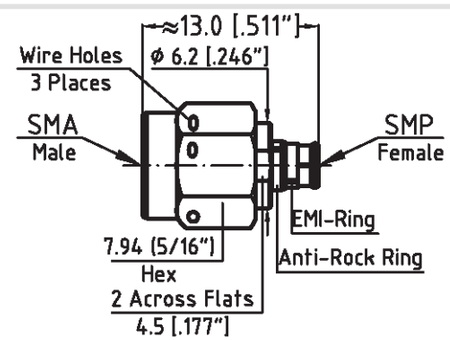

Part - No.	8001-MP11-00
Connectors	SMP-fem. to SMA-male
Frequency	DC - 18.0 GHz
VSWR max.	1.06 + 0.005 x f(GHz)

Wire holes in coupling nut

Coupling Nut is passivated stainless steel

You do not find the Adapter you need for an application? You need technical support? You need price and delivery information? Please contact your nearest Spectrum Representative, or please contact us direct.

Telephone: +49-89-3548-040 Facsimile: +49-89-3548-0490
e-mail: sales@spectrum-et.com www.spectrum-et.com

Dimensions shown are Inches over Millimeters or vice versa. Standard units have stainless finish (last 2 digits of the P/N are -02). Interfaces are per DIN 47 223, DIN 47 226, IEC 169-4, IEC 169-7, IEC 169-8, IEC 457-2, IEC 60169-5, IEEE 287, MIL-PRF-39012, MIL DTL-24044, MIL DTL-3643,MIL-STD-348B, where applicable

Part - No.	8001-MJ21-02
Connectors	SMP-male to SMA-fem.
Frequency	DC - 18.0 GHz
VSWR max.	1.06 + 0.005 x f(GHz)
Coupling	Limited Detent

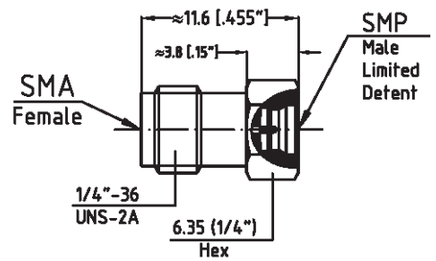

Part - No.	8003-MJ21-02
Connectors	SMP-male to SMA-fem.
Frequency	DC - 18.0 GHz
VSWR max.	1.06 + 0.005 x f(GHz)
Coupling	Full Detent

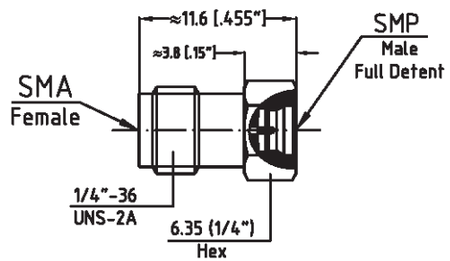

Part - No.	8006-MJ21-02
Connectors	SMP-male to SMA-fem.
Frequency	DC - 18.0 GHz
VSWR max.	1.06 + 0.005 x f(GHz)
Coupling	Smooth Bore

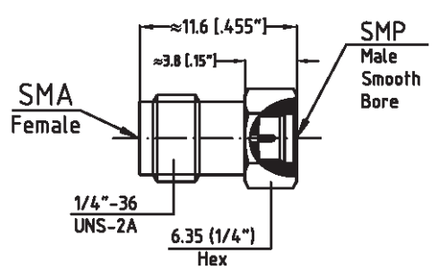

Although our catalog incorporates a very comprehensive range of products, due to our program of continuous development, there is no way that it will contain every product we manufacture. Please consult the factory for the product you require.

Dimensions shown are Inches over Millimeters or vice versa. Standard units have stainless finish (last 2 digits of the P/N are -02). Interfaces are per DIN 47 223, DIN 47 226, IEC 169-4, IEC 169-7, IEC 169-8, IEC 457-2, IEC 60169-5, IEEE 287, MIL-PRF-39012, MIL DTL-24044, MIL DTL-3643,MIL-STD-348B, where applicable

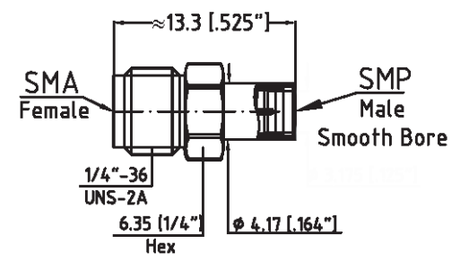

Part - No.	8002-MJ21-02
Connectors	SMP-male to SMA-fem.
Frequency	DC - 18.0 GHz
VSWR max.	1.06 + 0.005 x f(GHz)
Coupling	Smooth Bore

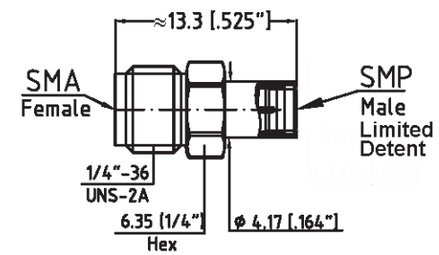

Part - No.	8004-MJ21-02
Connectors	SMP-male to SMA-fem.
Frequency	DC - 18.0 GHz
VSWR max.	1.06 + 0.005 x f(GHz)
Coupling	Limited Detent

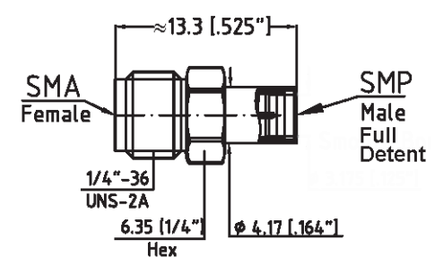

Part - No.	8007-MJ21-02
Connectors	SMP-male to SMA-fem.
Frequency	DC - 18.0 GHz
VSWR max.	1.06 + 0.005 x f(GHz)
Coupling	Full Detent

Although our catalog incorporates a very comprehensive range of products, due to our program of continuous development, there is no way that it will contain every product we manufacture. Please consult the factory for the product you require.

Telephone: +49-89-3548-040 Facsimile: +49-89-3548-0490
E-mail: sales@spectrum-et.com www.spectrum-et.com

Dimensions shown are Inches over Millimeters or vice versa. Standard units have stainless finish (last 2 digits of the P/N are -02). Interfaces are per DIN 47 223, DIN 47 226, IEC 169-4, IEC 169-7, IEC 169-8, IEC 457-2, IEC 60169-5, IEEE 287, MIL-PRF-39012, MIL DTL-24044, MIL DTL-3643,MIL-STD-348B, where applicable

Part - No.	8003-MJ11-02
Connectors	SMP-male to SMA-male
Frequency	DC - 18.0 GHz
VSWR max.	1.06 + 0.005 x f(GHz)
Coupling	Full Detent

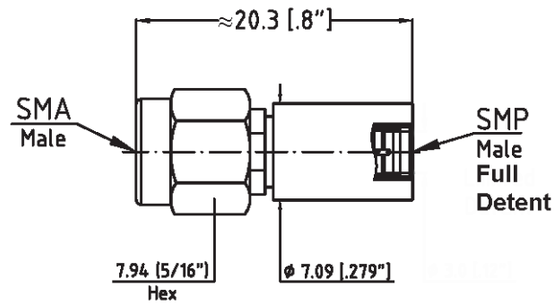

Part - No.	8004-MJ11-02
Connectors	SMP-male to SMA-male
Frequency	DC - 18.0 GHz
VSWR max.	1.06 + 0.005 x f(GHz)
Coupling	Limited Detent

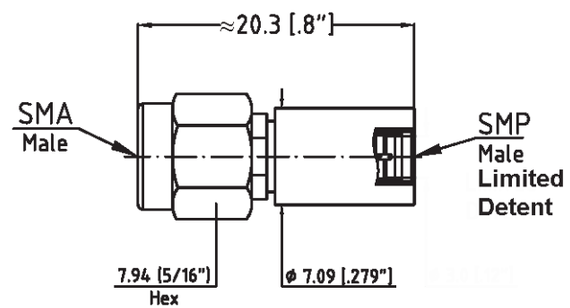

Part - No.	8005-MJ11-02
Connectors	SMP-male to SMA-male
Frequency	DC - 18.0 GHz
VSWR max.	1.06 + 0.005 x f(GHz)
Coupling	Smooth Bore

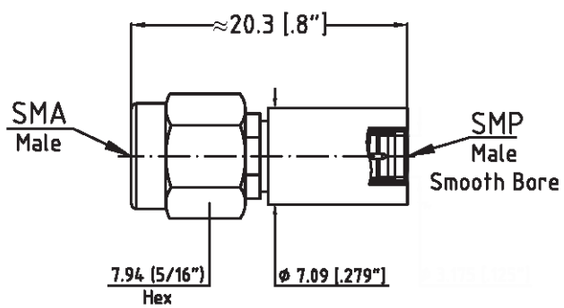

Although our catalog incorporates a very comprehensive range of products, due to our program of continuous development, there is no way that it will contain every product we manufacture. Please consult the factory for the product you require.

Telephone: +49-89-3548-040 Facsimile: +49-89-3548-0490
E-mail: sales@spectrum-et.com www.spectrum-et.com

Dimensions shown are Inches over Millimeters or vice versa. Standard units have stainless finish (last 2 digits of the P/N are -02). Interfaces are per DIN 47 223, DIN 47 226, IEC 169-4, IEC 169-7, IEC 169-8, IEC 457-2, IEC 60169-5, IEEE 287, MIL-PRF-39012, MIL DTL-24044, MIL DTL-3643,MIL-STD-348B, where applicable

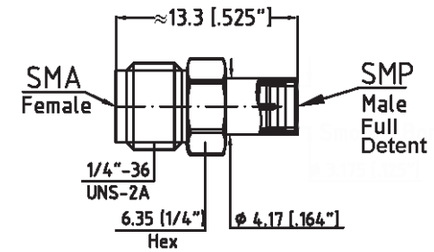

Part - No.	8005-MJ21-02
Connectors	SMP-male to SMA-fem.
Frequency	DC - 18.0 GHz
VSWR max.	1.06 + 0.005 x f(GHz)
Coupling	Full Detent

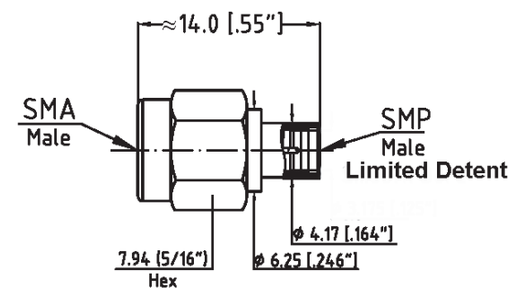

Part - No.	8001-MJ11-02
Connectors	SMP-male to SMA-male
Frequency	DC - 18.0 GHz
VSWR max.	1.06 + 0.005 x f(GHz)
Coupling	Limited Detent

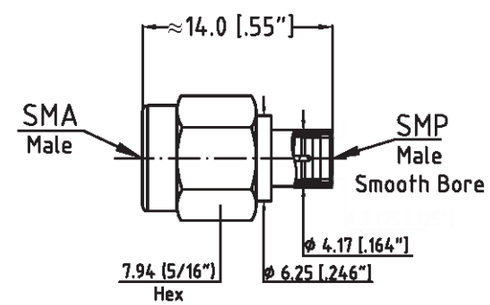

Part - No.	8002-MJ11-02
Connectors	SMP-male to SMA-male
Frequency	DC - 18.0 GHz
VSWR max.	1.06 + 0.005 x f(GHz)
Coupling	Smooth Bore

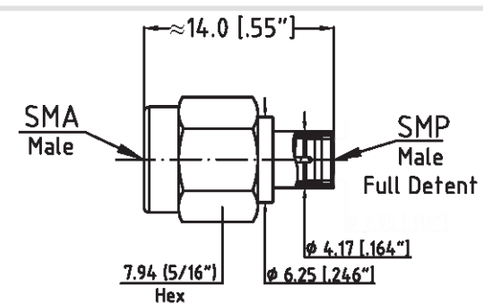

Part - No.	8006-MJ11-02
Connectors	SMP-male to SMA-male
Frequency	DC - 18.0 GHz
VSWR max.	1.06 + 0.005 x f(GHz)
Coupling	Full Detent

Dimensions shown are Inches over Millimeters or vice versa. Standard units have stainless finish (last 2 digits of the P/N are -02). Interfaces are per DIN 47 223, DIN 47 226, IEC 169-4, IEC 169-7, IEC 169-8, IEC 457-2, IEC 60169-5, IEEE 287, MIL-PRF-39012, MIL DTL-24044, MIL DTL-3643,MIL-STD-348B, where applicable

In- and Between-Series CalKit Adapters SMP

If your choice of the SMP Cal-Kit Adapter is not shown in this section, please refer to the Table below to determine other possible locations. Should you not find your adapter listed in any section, please consult the factory or your Spectrum Elektrotechnik Area Representative.

SMP CalKit Adapters	Section	Page
SMP CalKit Adapters Overview & Specifications	S	1
SMP In-Series	S	6
SMP In-Series of equal electrical length	S	8
Between Series SMP to 2.4mm	S	10
Between Series SMP to 2.4mm of equiv. el. lengths	S	12
Between Series SMP to 2.92mm	S	15
Between Series SMP to 2.92mm of equiv.el.lengths	S	19
Between Series SMP to 3.5mm	S	23
Between Series SMP to 3.5mm of equiv.el.lengths	S	24

Although our catalog incorporates a very comprehensive range of products, due to our program of continuous development, there is no way that it will contain every product we manufacture. Please consult the factory for the product you require.
To improve our Standard Products we reserve the right to make changes. Specifications are therefore subject to change without notice.

Dimensions shown are Inches over Millimeters or vice versa. Standard units have stainless finish (last 2 digits of the P/N are -02). Interfaces are per DIN 47 223, DIN 47 226, IEC 169-4, IEC 169-7, IEC 169-8, IEC 457-2, IEC 60169-5, IEEE 287, MIL-PRF-39012, MIL DTL-24044, MIL DTL-3643,MIL-STD-348B, where applicable

The specifications below are general specifications for all SMP connectors. Specific Data for VSWR, Insertion loss, R.F. leakage etc., are available from the factory upon request. Specifications in the following table are recommended for any procurement documents or drawings. In the event of any conflict between these specifications DESCC 94007 & DESCC 94008 and other documentation, these specifications shall govern. These specifications are subject to change according to the latest revision.

REQUIREMENT	GENERAL SPECIFICATIONS
Standard Materials	STEEL corrosion resistant 1.4305 per DIN EN 10088; ASTM-A582 (303), or 1.4404 (316L) respectively. ALUMINUM AlMg4.5Mn per DIN DIN EN 1706, AlMgSi0.5 per DIN EN 1706, AlMgSi1 per DIN EN 1706 (6061-T6 per QQ-A-225/8). BRASS CuZn39Pb3 per DIN 17660 (QQ-B-626 (ASTM-B124), half hard). COPPER BERYLLIUM 33-25 CuBe2PbH per DIN17666(DIN CEN/TS;DIN SPEC 9700)(QQ-C530). TFE Fluorocarbon per DIN 52900 (ASTM-D-1710), or Thermoplast per DIN EN ISO 10350, or PEI per in-house specification respectively for higher temperature applications. SILICONE RUBBER per DIN ISO 3601)(A-A-59588,Class IIB) Gr. 50 - 75. BORIUM NITRITE Dielectric for high power applications per in-house specification
Finish for COPPER BERYLLIUM STAINLESS STEEL ALUMINUM BRASS VARIOUS	Center Contacts shall be gold plated to a minimum thickness of .00005-inch in accordance with ASTM-B-488, Type III, Code C, Class 1.25 shall be passivated per ASTM-A967 Conductive Parts shall have an iridited finish per MIL-DTL-5541 Other parts, such as Coupling Nuts and Back-Bodies shall be anodized per MIL-A-8625. .00003 inch (0.8 µm) min. gold plating per MIL-DTL-45204, or nickel plating per QQ-N-290, as specified. Imoloy .0001 inch (2.5 µm) min. plating, consisting of 55% Copper / 20% Zinc / 25% Tin (on special request).
Design	The design shall be such that the outline dimensions in this catalog are met. In addition, the assembled connector shall meet the interface dimensions.
ELECTRICAL	
Frequency Range	DC - 40.0 GHz min.
Insulation Resistance	The insulation resistance shall not be less than 5.000 megaohms.
Voltage Standing Wave Ratio (VSWR)	1.03 + 0.003 x f (GHz)
Contact Resistance	The center contact resistance drop is 6.0 milliohms max.
Dielectric Withstanding Voltage	The magnitude of the test voltage shall be 500 volts rms at sea level.
RF High Potential	The RF high potential withstanding voltage is 325 volts rms at 5 MHz. Leakage is not
Withstanding Voltage	applicable.
RF Leakage	RF Leakage: 80 dB max @ 3 GHz; approx. 60 dB @ 26.5 GHz (at full detent proper mated)
Insertion Loss	(.10 SQT(f(GHz))) dB
MECHANICAL	
Connector Durability	The connector is to be tested and its mating connector shall be subjected to 100 insertions min.. Withdrawal cycles /minute are not applicable. The connector shall show no evidence of mechanical failure and the connector shall meet the mating characteristic requirements.
Cable Retention Force	Not applicable.
Coupling Nut Retention Force	Not applicable.
Force to Engage and Disengage	The force to engage shall be max.15 lbs.(66.7 N)(full detent); 10 lbs.(44.5 N)(lim. detent); 2 lbs.(8.9 N)(smooth bore) The disengage force shall be min. 5 lbs.(22.2 N)(full detent); 2 lbs.(8.9 N)(lim. detent); 0.5 lbs.(2.22 N)(smooth bore)
Longitudinal Force max.	Not applicable.
Mating Characteristics	Not applicable.
Recommended Mating Torque	Recommended Mating Torque is not applicable.
ENVIRONMENTAL	
Corrosion (Salt Spray)	Specification MIL-STD-202, Method 101, Test Condition B. The salt solution shall be 5%.
Vibration	Specification MIL-STD-202, Method 204, Test Condition B.
Shock	Specification MIL-STD-202, Method 213, Test Condition I.
Thermal Shock	Specification MIL-STD-202, Method 107, Test Condition B, except high temperature shall be +70°C when the regular Bead is used, +170° when the high temperature Bead is used, and
Moisture Resistance	+200°C when TFE Fluorocarbon or Borium Nitrite Dielectric are used. Specification MIL-STD-202, Method 106. Step 7b (vibration) shall be omitted. Insulation
Corona Level	resistance shall be 200 megohms min. within 5 minutes of removal from humidity. The connector shall not exhibit breakdown (corona) when the applied voltage is 2800 volts rms and the altitude is 0 feet.

Dimensions shown are Inches over Millimeters or vice versa. Standard units have stainless finish (last 2 digits of the P/N are -02). Interfaces are per DIN 47 223, DIN 47 226, IEC 169-4, IEC 169-7, IEC 169-8, IEC 457-2, IEC 60169-5, IEEE 287, MIL-PRF-39012, MIL DTL-24044, MIL DTL-3643,MIL-STD-348B, where applicable

Spectrum Elektrotechnik GmbH
Germany
www.spectrum-et.com
sales@spectrum-et.com
Phone: +49 / 89 / 35 48 04 0
Fax: +49 / 89 / 35 48 04 90

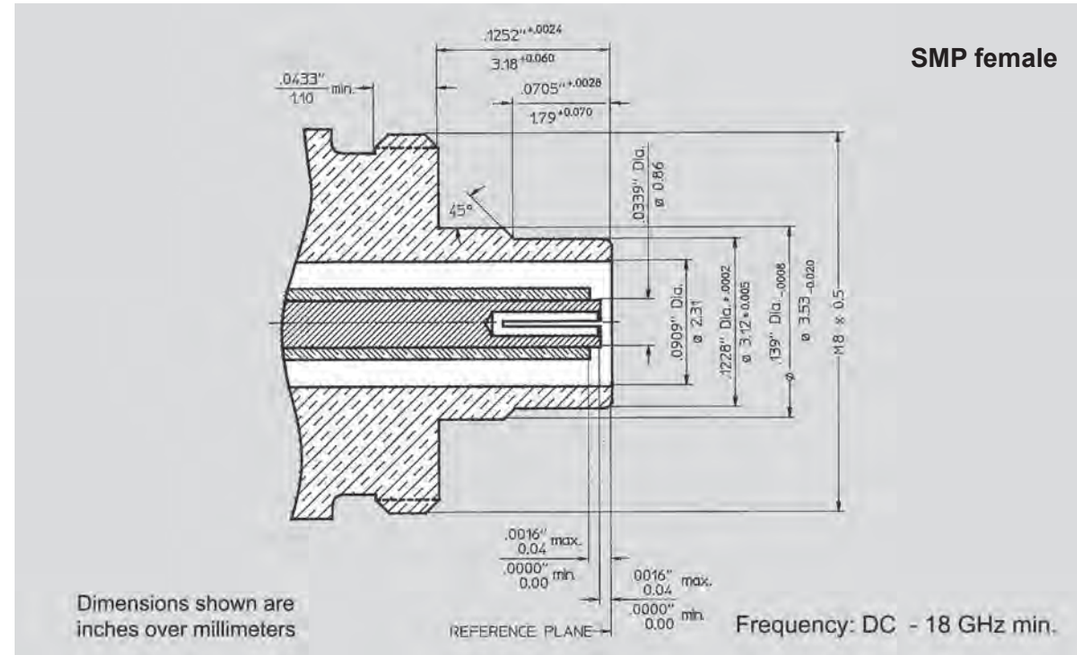

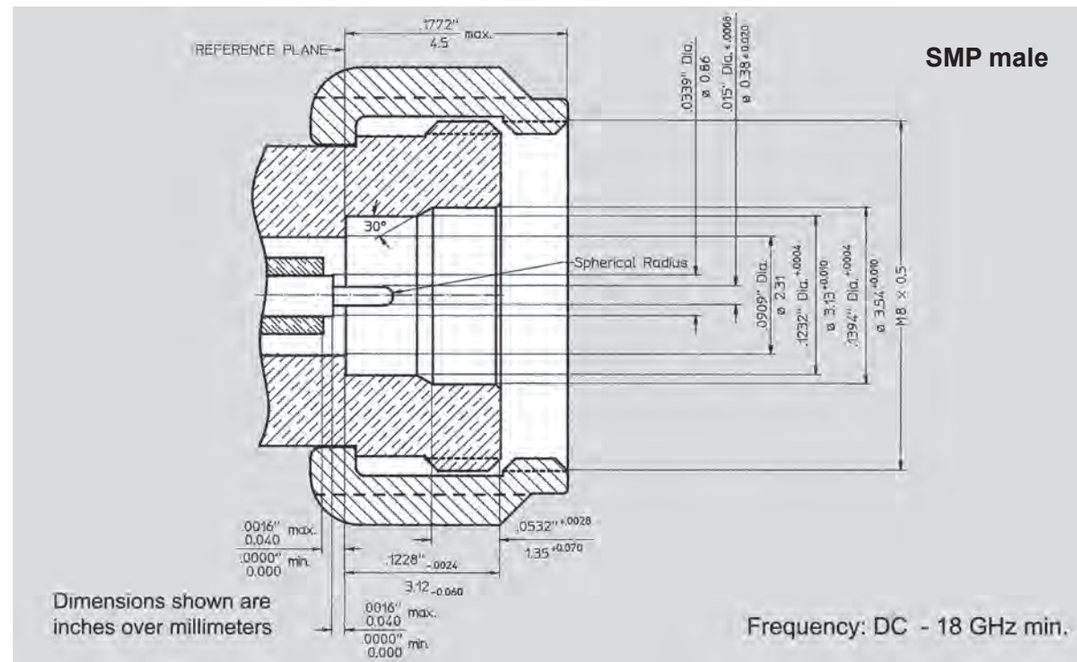

Dimensions shown are Inches over Millimeters or vice versa. Standard units have stainless finish (last 2 digits of the P/N are -02). Interfaces are per DIN 47 223, DIN 47 226, IEC 169-4, IEC 169-7, IEC 169-8, IEC 457-2, IEC 60169-5, IEEE 287, MIL-PRF-39012, MIL DTL-24044, MIL DTL-3643,MIL-STD-348B, where applicable

Spectrum Elektrotechnik GmbH
Germany
www.spectrum-et.com
sales@spectrum-et.com
Phone: +49 / 89 / 35 48 04 0
Fax: +49 / 89 / 35 48 04 90

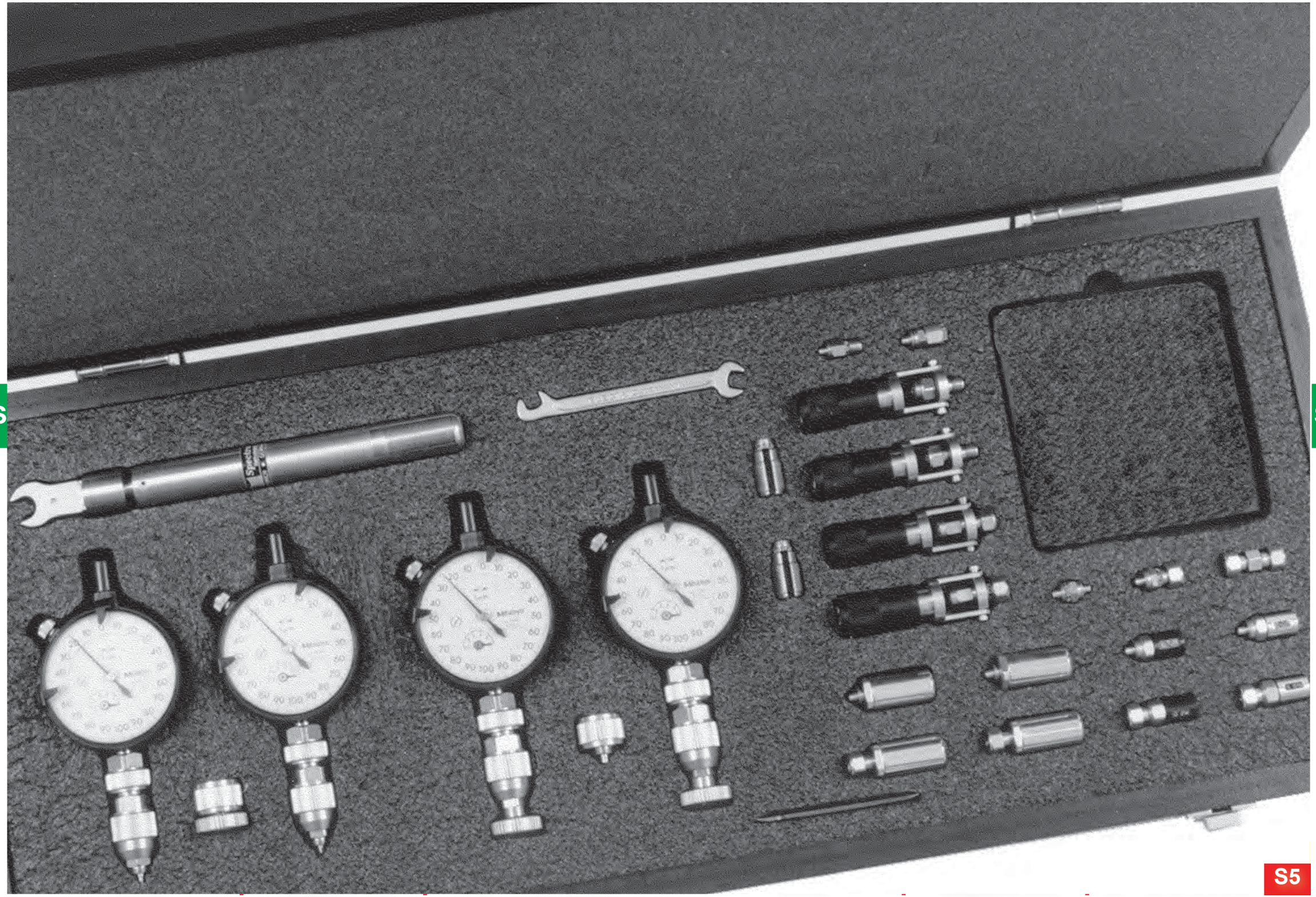

S

Part - No.	8001-TLTL-02
Connectors	SMP-fem. to SMP-fem.
Frequency	DC - 18.0 GHz
VSWR max.	1.03 + 0.003 x f(GHz)
Coupling	Limited Detent both sides

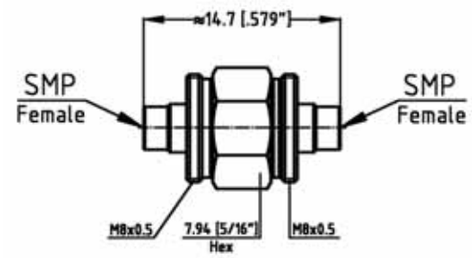

Part - No.	8002-MPMP-02
Connectors	SMP-fem. to SMP-fem.
Frequency	DC - 40.0 GHz
VSWR max.	1.03 + 0.003 x f(GHz)
Coupling	Smooth Bore both sides

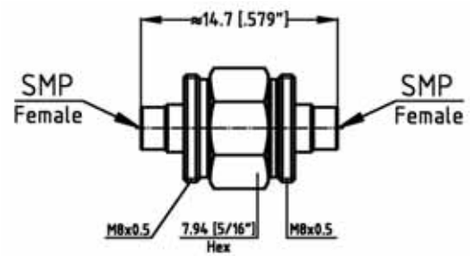

Part - No.	8002-TPTP-02
Connectors	SMP-fem. to SMP-fem.
Frequency	DC - 18.0 GHz
VSWR max.	1.03 + 0.003 x f(GHz)
Coupling	Full Detent both sides

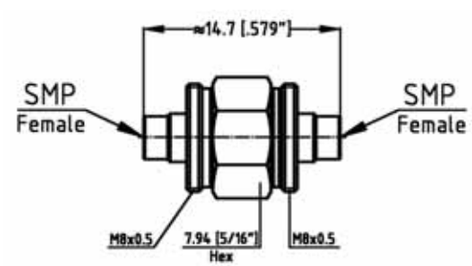

You do not find the Adapter you need for an application? You need technical support? You need price and delivery information? Please contact your nearest Spectrum Representative, or please contact us direct.

Telephone: +49-89-3548-040 Facsimile: +49-89-3548-0490
e-mail: sales@spectrum-et.com www.spectrum-et.com

Dimensions shown are Inches over Millimeters or vice versa. Standard units have stainless finish (last 2 digits of the P/N are -02). Interfaces are per DIN 47 223, DIN 47 226, IEC 169-4, IEC 169-7, IEC 169-8, IEC 457-2, IEC 60169-5, IEEE 287, MIL-PRF-39012, MIL DTL-24044, MIL DTL-3643,MIL-STD-348B, where applicable

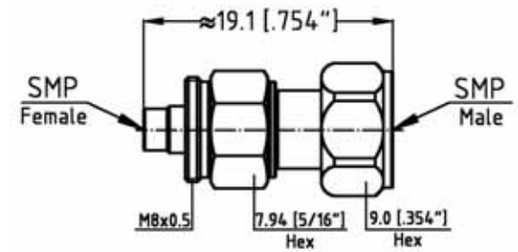

Part - No.	8001-MJMP-02
Connectors	SMP-fem. to SMP-male
Frequency	DC - 40.0 GHz
VSWR max.	1.03 + 0.003 x f(GHz)
Coupling	Smooth Bore both sides

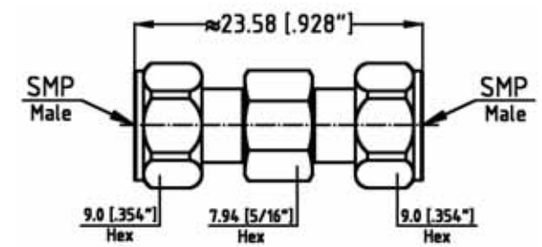

Part - No.	8001-MJMJ-02
Connectors	SMP-male to SMP-male
Frequency	DC - 40.0 GHz
VSWR max.	1.03 + 0.003 x f(GHz)
Coupling	Smooth Bore both sides

Dimensions shown are Inches over Millimeters or vice versa. Standard units have stainless finish (last 2 digits of the P/N are -02). Interfaces are per DIN 47 223, DIN 47 226, IEC 169-4, IEC 169-7, IEC 169-8, IEC 457-2, IEC 60169-5, IEEE 287, MIL-PRF-39012, MIL DTL-24044, MIL DTL-3643,MIL-STD-348B, where applicable

Part - No.	8801-TLTL-02
Connectors	SMP-fem. to SMP-fem.
Frequency	DC - 18.0 GHz
VSWR max.	1.03 + 0.003 x f(GHz)
Coupling	Limitet Detend both sides

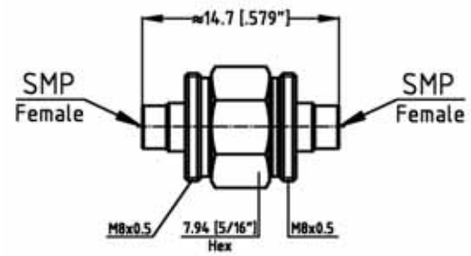

Part - No.	8801-TPTP-02
Connectors	SMP-fem. to SMP-fem.
Frequency	DC - 18.0 GHz
VSWR max.	1.03 + 0.003 x f(GHz)
Coupling	Smooth Bore both sides

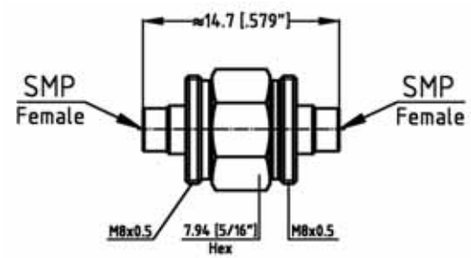

Part - No.	8801-TJTP-02
Connectors	SMP-fem. to SMP-male
Frequency	DC - 18.0 GHz
VSWR max.	1.03 + 0.003 x f(GHz)
Coupling	Smooth Bore both sides

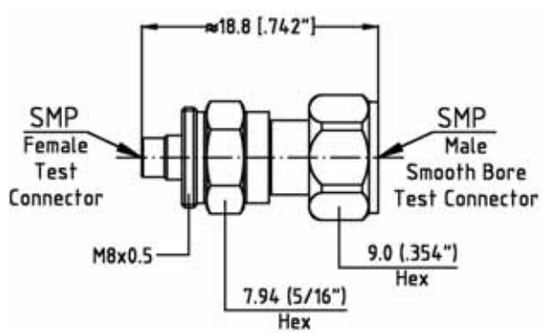

Part - No.	8802-TJTP-02
Connectors	SMP-fem. to SMP-male
Frequency	DC - 18.0 GHz
VSWR max.	1.03 + 0.003 x f(GHz)
Coupling	Smooth Bore both sides

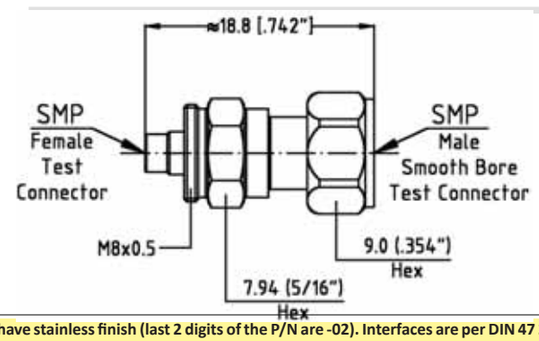

Dimensions shown are Inches over Millimeters or vice versa. Standard units have stainless finish (last 2 digits of the P/N are -02). Interfaces are per DIN 47 223, DIN 47 226, IEC 169-4, IEC 169-7, IEC 169-8, IEC 457-2, IEC 60169-5, IEEE 287, MIL-PRF-39012, MIL DTL-24044, MIL DTL-3643,MIL-STD-348B, where applicable

Spectrum Elektrotechnik GmbH
Germany
www.spectrum-et.com
sales@spectrum-et.com
Phone: +49 / 89 / 35 48 04 0
Fax: +49 / 89 / 35 48 04 90

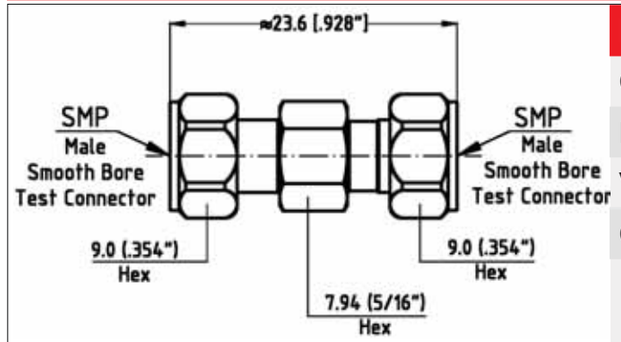

Part - No.	8801-TJTJ-02
Connectors	SMP-male to SMP-male
Frequency	DC - 18.0 GHz
VSWR max.	1.03 + 0.003 x f(GHz)
Coupling	Smooth Bore both sides

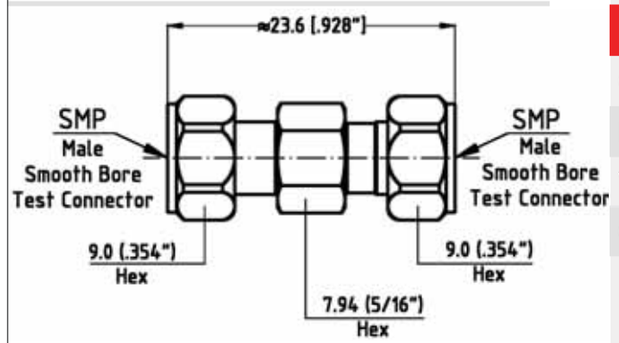

Part - No.	8802-TJTJ-02
Connectors	SMP-male to SMP-male
Frequency	DC - 40.0 GHz
VSWR max.	1.03 + 0.003 x f(GHz)
Coupling	Smooth Bore both sides

Dimensions shown are Inches over Millimeters or vice versa. Standard units have stainless finish (last 2 digits of the P/N are -02). Interfaces are per DIN 47 223, DIN 47 226, IEC 169-4, IEC 169-7, IEC 169-8, IEC 457-2, IEC 60169-5, IEEE 287, MIL-PRF-39012, MIL DTL-24044, MIL DTL-3643,MIL-STD-348B, where applicable

Spectrum Elektrotechnik GmbH
Germany
www.spectrum-et.com
sales@spectrum-et.com
Phone: +49 / 89 / 35 48 04 0
Fax: +49 / 89 / 35 48 04 90

Part - No.	8001-HFTP-02
Connectors	SMP-fem. to 2.4mm-fem.
Frequency	DC - 18.0 GHz
VSWR max.	1.03 + 0.003 x f(GHz)
Coupling	SMP Smooth Bore Test Conn.

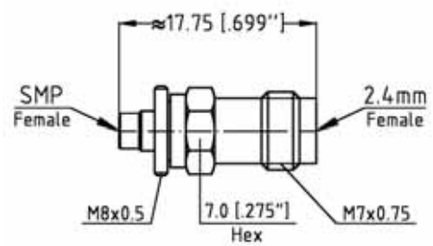

Part - No.	8001-HFTL-02
Connectors	SMP-fem. to 2.4mm-fem.
Frequency	DC - 18.0 GHz
VSWR max.	1.03 + 0.003 x f(GHz)
Coupling	SMP Limited Detent Test Conn.

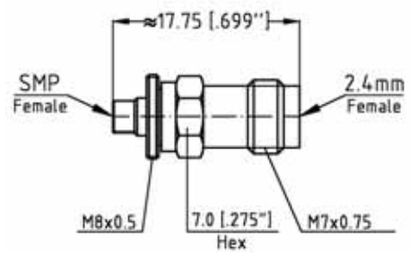

Part - No.	8001-HFTB-02
Connectors	SMP-male to 2.4mm-fem.
Frequency	DC - 18.0 GHz
VSWR max.	1.03 + 0.003 x f(GHz)
Coupling	SMP Standard Test Conn.

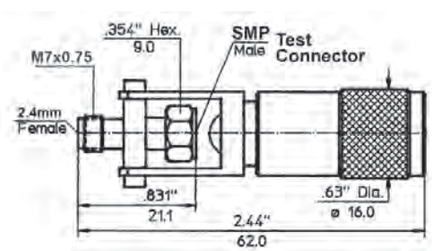

Commercial Unit

Although our catalog incorporates a very comprehensive range of products, due to our program of continuous development, there is no way that it will contain every product we manufacture. Please consult the factory for the product you require.

Dimensions shown are Inches over Millimeters or vice versa. Standard units have stainless finish (last 2 digits of the P/N are -02). Interfaces are per DIN 47 223, DIN 47 226, IEC 169-4, IEC 169-7, IEC 169-8, IEC 457-2, IEC 60169-5, IEEE 287, MIL-PRF-39012, MIL DTL-24044, MIL DTL-3643,MIL-STD-348B, where applicable

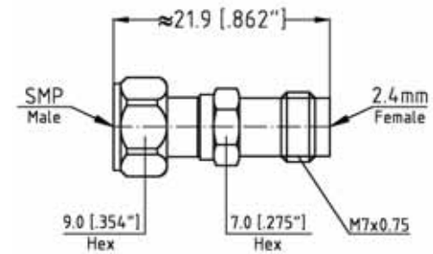

Part - No.	8001-HFTC-02
Connectors	SMP-male to 2.4mm-fem.
Frequency	DC - 18.0 GHz
VSWR max.	1.03 + 0.003 x f(GHz)
Coupling	SMP Smooth bore, Test conn.

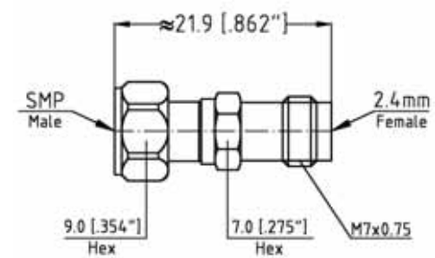

Part - No.	8001-HFTJ-02
Connectors	SMP-male to 2.4mm-fem.
Frequency	DC - 18.0 GHz
VSWR max.	1.03 + 0.003 x f(GHz)
Coupling	SMP Smooth Bore Test Conn.

Precision Unit

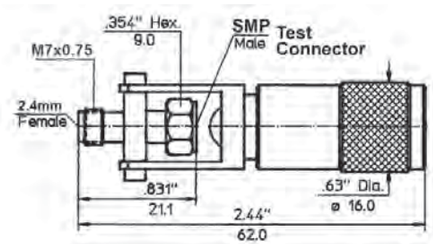

Part - No.	8001-HFTD-02
Connectors	SMP-male to 2.4mm-fem.
Frequency	DC - 18.0 GHz
VSWR max.	1.03 + 0.003 x f(GHz)
Coupling	SMP Smooth Bore Test Conn.

Commercial Unit

You do not find the Adapter you need for an application? You need technical support? You need price and delivery information? Please contact your nearest Spectrum Representative, or please contact us direct.

Telephone: +49-89-3548-040 Facsimile: +49-89-3548-0490
e-mail: sales@spectrum-et.com www.spectrum-et.com

Dimensions shown are Inches over Millimeters or vice versa. Standard units have stainless finish (last 2 digits of the P/N are -02). Interfaces are per DIN 47 223, DIN 47 226, IEC 169-4, IEC 169-7, IEC 169-8, IEC 457-2, IEC 60169-5, IEEE 287, MIL-PRF-39012, MIL DTL-24044, MIL DTL-3643,MIL-STD-348B, where applicable

Part - No.	8801-HFTL-02
Connectors	SMP-fem. to 2.4mm-fem.
Frequency	DC - 18.0 GHz
VSWR max.	1.03 + 0.003 x f(GHz)
Coupling	SMP Limited Detent Test Conn.

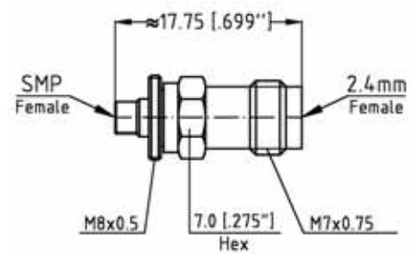

Part - No.	8801-HFTP-02
Connectors	SMP-fem. to 2.4mm-fem.
Frequency	DC - 18.0 GHz
VSWR max.	1.03 + 0.003 x f(GHz)
Coupling	SMP Smooth Bore Test Conn.

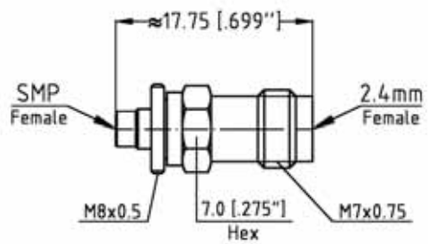

Part - No.	8801-HMTP-02
Connectors	SMP-fem. to 2.4mm-male
Frequency	DC - 18.0 GHz
VSWR max.	1.03 + 0.003 x f(GHz)
Coupling	SMP Smooth Bore Test Conn.

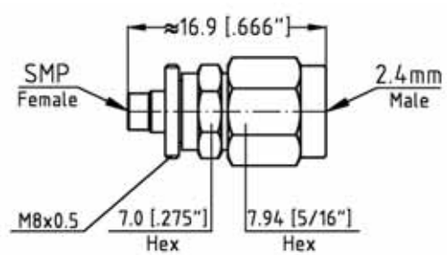

Although our catalog incorporates a very comprehensive range of products, due to our program of continuous development, there is no way that it will contain every product we manufacture. Please consult the factory for the product you require.

Dimensions shown are Inches over Millimeters or vice versa. Standard units have stainless finish (last 2 digits of the P/N are -02). Interfaces are per DIN 47 223, DIN 47 226, IEC 169-4, IEC 169-7, IEC 169-8, IEC 457-2, IEC 60169-5, IEEE 287, MIL-PRF-39012, MIL DTL-24044, MIL DTL-3643,MIL-STD-348B, where applicable

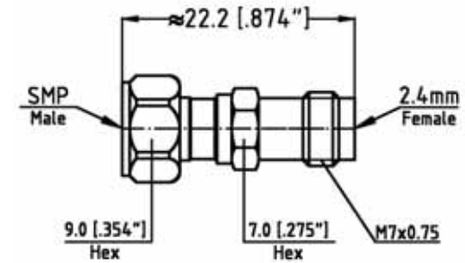

Part - No.	8801-HFTC-02
Connectors	SMP-male to 2.4mm-fem.
Frequency	DC - 18.0 GHz
VSWR max.	1.03 + 0.003 x f(GHz)
Coupling	SMP Smooth Bore Test Conn.

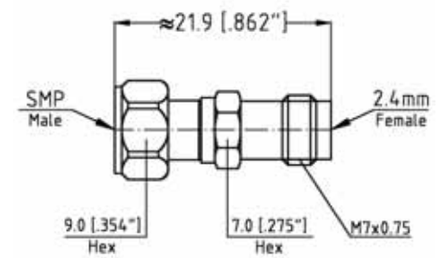

Part - No.	8801-HFTJ-02
Connectors	SMP-male to 2.4mm-fem.
Frequency	DC - 18.0 GHz
VSWR max.	1.03 + 0.003 x f(GHz)
Coupling	SMP Smooth Bore Test Conn.

Precision Unit

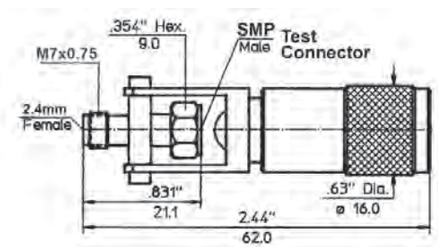

Part - No.	8801-HFTD-02
Connectors	SMP-male to 2.4mm-fem.
Frequency	DC - 18.0 GHz
VSWR max.	1.03 + 0.003 x f(GHz)
Coupling	SMP Smooth Bore Test Conn.

Commercial Unit

You do not find the Adapter you need for an application? You need technical support? You need price and delivery information? Please contact your nearest Spectrum Representative, or please contact us direct.

Telephone: +49-89-3548-040 Facsimile: +49-89-3548-0490
e-mail: sales@spectrum-et.com www.spectrum-et.com

Dimensions shown are Inches over Millimeters or vice versa. Standard units have stainless finish (last 2 digits of the P/N are -02). Interfaces are per DIN 47 223, DIN 47 226, IEC 169-4, IEC 169-7, IEC 169-8, IEC 457-2, IEC 60169-5, IEEE 287, MIL-PRF-39012, MIL DTL-24044, MIL DTL-3643,MIL-STD-348B, where applicable

Part - No.	8801-HMTJ-02
Connectors	SMP-male to 2.4mm-male
Frequency	DC - 18.0 GHz
VSWR max.	1.03 + 0.003 x f(GHz)
Coupling	SMP Smooth Bore Test Conn.
	Precision Unit

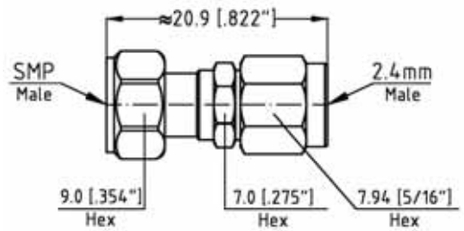

Part - No.	8801-HMTB-02
Connectors	SMP-male to 2.4mm-male
Frequency	DC - 18.0 GHz
VSWR max.	1.03 + 0.003 x f(GHz)
Coupling	SMP Smooth Bore Test Conn.
	Commercial Unit

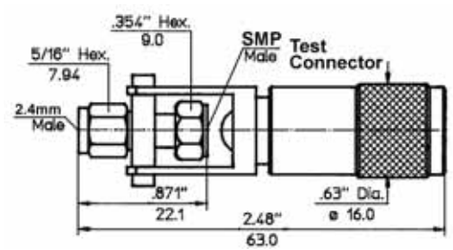

Part - No.	8801-HMTD-02
Connectors	SMP-male to 2.4mm-male
Frequency	DC - 18.0 GHz
VSWR max.	1.03 + 0.003 x f(GHz)
Coupling	SMP Smooth Bore Test Conn.
	Commercial Unit

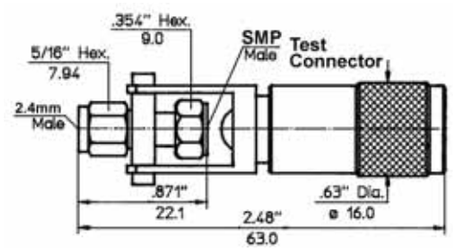

You do not find the Adapter you need for an application? You need technical support? You need price and delivery information? Please contact your nearest Spectrum Representative, or please contact us direct.

Telephone: +49-89-3548-040 Facsimile: +49-89-3548-0490
e-mail: sales@spectrum-et.com www.spectrum-et.com

Dimensions shown are Inches over Millimeters or vice versa. Standard units have stainless finish (last 2 digits of the P/N are -02). Interfaces are per DIN 47 223, DIN 47 226, IEC 169-4, IEC 169-7, IEC 169-8, IEC 457-2, IEC 60169-5, IEEE 287, MIL-PRF-39012, MIL DTL-24044, MIL DTL-3643,MIL-STD-348B, where applicable

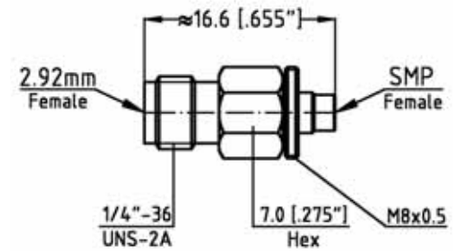

Part - No.	8002-KFTP-02
Connectors	SMP-fem. to 2.92mm-fem.
Frequency	DC - 40.0 GHz
VSWR max.	1.03 + 0.003 x f(GHz)
Coupling	SMP Smooth bore Test Conn.

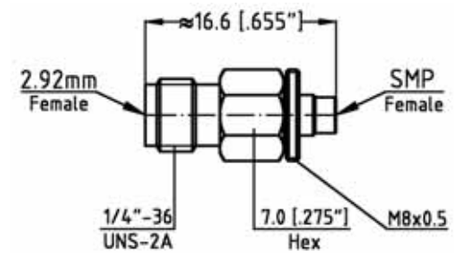

Part - No.	8002-KFMP-02
Connectors	SMP-fem. to 2.92mm-fem.
Frequency	DC - 26.5 GHz
VSWR max.	1.03 + 0.003 x f(GHz)
Coupling	SMP Smooth bore Test Conn.

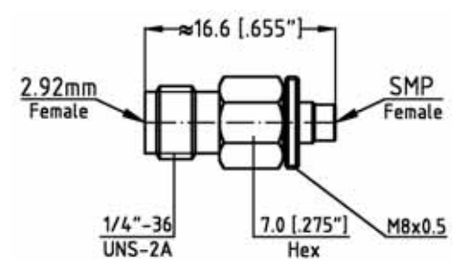

Part - No.	8003-KFMP-02
Connectors	SMP-fem. to 2.92mm-fem.
Frequency	DC - 40.0 GHz
VSWR max.	1.03 + 0.003 x f(GHz)
Coupling	SMP Smooth bore Test Conn.

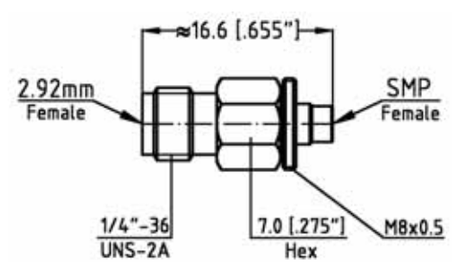

Part - No.	8004-KFMP-02
Connectors	SMP-fem. to 2.92mm-fem.
Frequency	DC - 26.5 GHz
VSWR max.	1.03 + 0.003 x f(GHz)
Coupling	SMP Smooth bore Test Conn.

Dimensions shown are Inches over Millimeters or vice versa. Standard units have stainless finish (last 2 digits of the P/N are -02). Interfaces are per DIN 47 223, DIN 47 226, IEC 169-4, IEC 169-7, IEC 169-8, IEC 457-2, IEC 60169-5, IEEE 287, MIL-PRF-39012, MIL DTL-24044, MIL DTL-3643,MIL-STD-348B, where applicable

Part - No.	8007-KFMJ-02
Connectors	SMP-male to 2.92mm-fem.
Frequency	DC - 40.0 GHz
VSWR max.	1.03 + 0.003 x f(GHz)
Coupling	SMP Smooth Bore Test Conn.

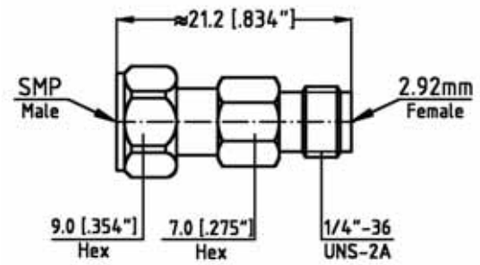

Part - No.	8009-KFMJ-02
Connectors	SMP-male to 2.92mm-fem.
Frequency	DC - 40.0 GHz
VSWR max.	1.03 + 0.003 x f(GHz)
Coupling	SMP Smooth Bore Test Conn.

Precision Unit

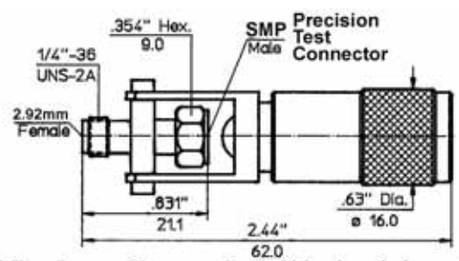

Part - No.	8010-KFMJ-02
Connectors	SMP-male to 2.92mm-fem.
Frequency	DC - 40.0 GHz
VSWR max.	1.03 + 0.003 x f(GHz)
Coupling	SMP Smooth Bore Test Conn.

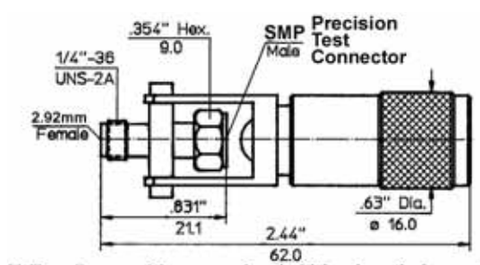

Part - No.	8005-KMMJ-02
Connectors	SMP-male to 2.92mm-male
Frequency	DC - 26.5 GHz
VSWR max.	1.03 + 0.003 x f(GHz)
Coupling	Smooth Bore Precision

Precision Unit

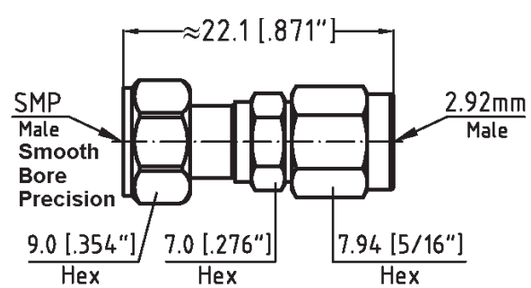

Dimensions shown are Inches over Millimeters or vice versa. Standard units have stainless finish (last 2 digits of the P/N are -02). Interfaces are per DIN 47 223, DIN 47 226, IEC 169-4, IEC 169-7, IEC 169-8, IEC 457-2, IEC 60169-5, IEEE 287, MIL-PRF-39012, MIL DTL-24044, MIL DTL-3643,MIL-STD-348B, where applicable

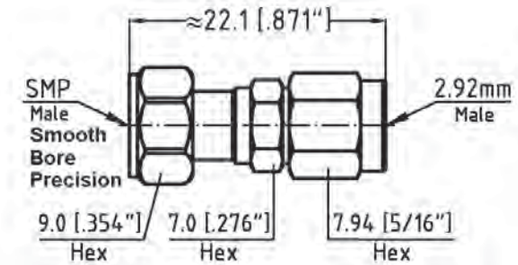

Part - No.	8006-KMMJ-02
Connectors	SMP-male to 2.92mm-male
Frequency	DC - 26.5 GHz
VSWR max.	1.03 + 0.003 x f(GHz)
Coupling	SMP Smooth Bore Test Conn.

Precision Unit

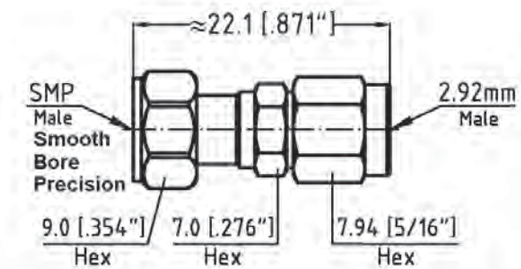

Part - No.	8007-KMMJ-02
Connectors	SMP-male to 2.92mm-male
Frequency	DC - 40.0 GHz
VSWR max.	1.03 + 0.003 x f(GHz)
Coupling	SMP Smooth Bore Test Conn.

Precision Unit

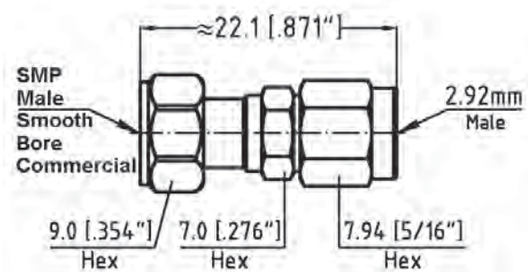

Part - No.	8008-KMMJ-02
Connectors	SMP-male to 2.92mm-male
Frequency	DC - 40.0 GHz
VSWR max.	1.03 + 0.003 x f(GHz)
Coupling	SMP Smooth Bore Test Conn.

Commercial Unit

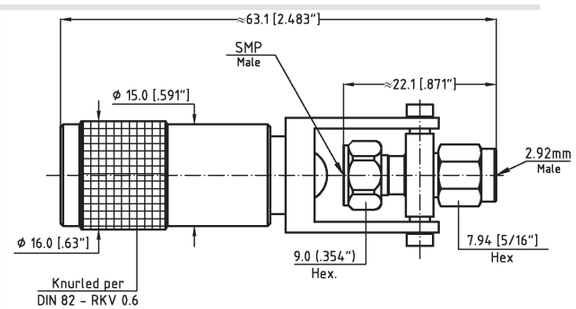

Part - No.	8009-KMMJ-02
Connectors	SMP-male to 2.92mm-male
Frequency	DC - 40.0 GHz
VSWR max.	1.03 + 0.003 x f(GHz)
Coupling	SMP Smooth Bore Test Conn.

Precision Unit

Dimensions shown are Inches over Millimeters or vice versa. Standard units have stainless finish (last 2 digits of the P/N are -02). Interfaces are per DIN 47 223, DIN 47 226, IEC 169-4, IEC 169-7, IEC 169-8, IEC 457-2, IEC 60169-5, IEEE 287, MIL-PRF-39012, MIL DTL-24044, MIL DTL-3643,MIL-STD-348B, where applicable

Part - No.	8010-KMMJ-02
Connectors	SMP-male to 2.92mm-male
Frequency	DC - 40.0 GHz
VSWR max.	1.03 + 0.003 x f(GHz)
Coupling	SMP Smooth Bore Test Conn.

Commercial Unit

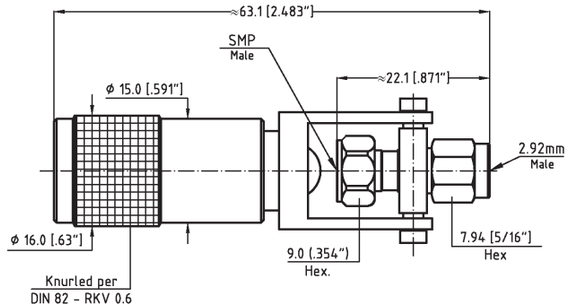

Part - No.	8003-KMMP-02
Connectors	SMP-fem. to 2.92mm-male
Frequency	DC - 40.0 GHz
VSWR max.	1.03 + 0.003 x f(GHz)

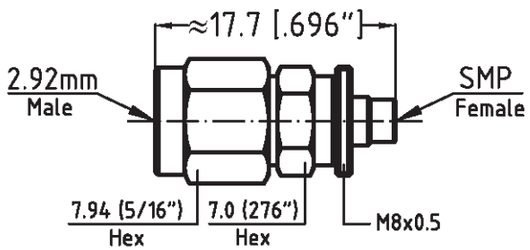

Dimensions shown are Inches over Millimeters or vice versa. Standard units have stainless finish (last 2 digits of the P/N are -02). Interfaces are per DIN 47 223, DIN 47 226, IEC 169-4, IEC 169-7, IEC 169-8, IEC 457-2, IEC 60169-5, IEEE 287, MIL-PRF-39012, MIL DTL-24044, MIL DTL-3643,MIL-STD-348B, where applicable

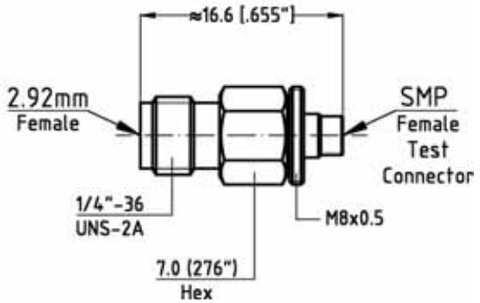

Part - No.	8801-KFTP-02
Connectors	SMP-fem. to 2.92mm-fem.
Frequency	DC - 18.0 GHz
VSWR max.	1.03 + 0.003 x f(GHz)
Coupling	SMP Smooth Bore Test Conn.

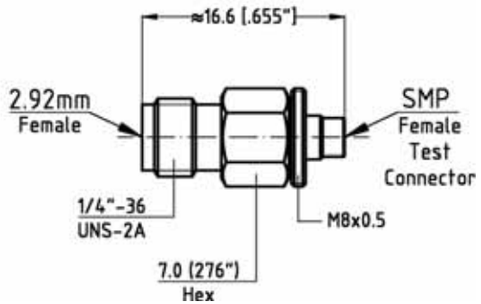

Part - No.	8802-KFTP-02
Connectors	SMP-fem. to 2.92mm-fem.
Frequency	DC - 40.0 GHz
VSWR max.	1.03 + 0.003 x f(GHz)
Coupling	SMP Smooth Bore Test Conn.

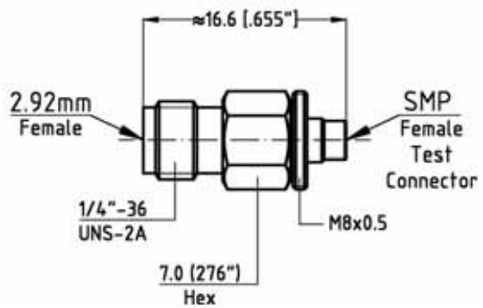

Part - No.	8801-KFTL-02
Connectors	SMP-fem. to 2.92mm-fem.
Frequency	DC - 18.0 GHz
VSWR max.	1.03 + 0.003 x f(GHz)
Coupling	SMP Limited Detent Test Conn.

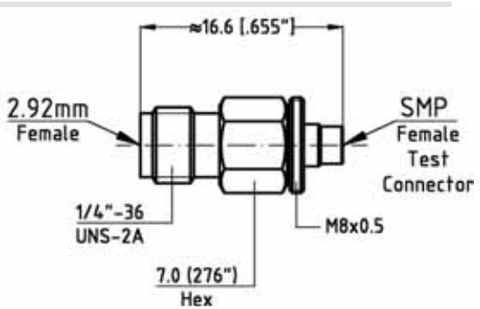

Part - No.	8801-KFTF-02
Connectors	SMP-fem. to 2.92mm-fem.
Frequency	DC - 18.0 GHz
VSWR max.	1.03 + 0.003 x f(GHz)
Coupling	SMP Full Detent Test Conn.

Dimensions shown are Inches over Millimeters or vice versa. Standard units have stainless finish (last 2 digits of the P/N are -02). Interfaces are per DIN 47 223, DIN 47 226, IEC 169-4, IEC 169-7, IEC 169-8, IEC 457-2, IEC 60169-5, IEEE 287, MIL-PRF-39012, MIL DTL-24044, MIL DTL-3643,MIL-STD-348B, where applicable

Part - No.	8801-KMTP-02
Connectors	SMP-fem. to 2.92mm-male
Frequency	DC - 18.0 GHz
VSWR max.	1.03 + 0.003 x f(GHz)
Coupling	SMP Smooth Bore Test Conn.

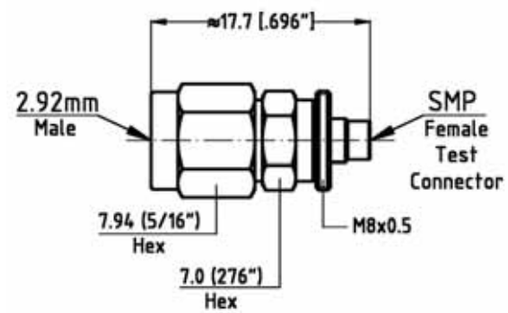

Part - No.	8802-KMTP-02
Connectors	SMP-fem. to 2.92mm-male
Frequency	DC - 40.0 GHz
VSWR max.	1.03 + 0.003 x f(GHz)
Coupling	SMP Smooth Bore Test Conn.

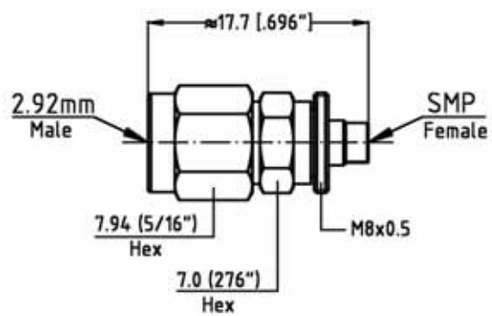

Part - No.	8801-KMTL-02
Connectors	SMP-fem. to 2.92mm-male
Frequency	DC - 18.0 GHz
VSWR max.	1.03 + 0.003 x f(GHz)
Coupling	SMP Limited Detent Test Conn.

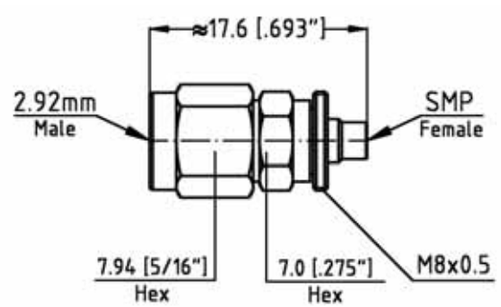

Part - No.	8801-KMTF-02
Connectors	SMP-fem. to 2.92mm-male
Frequency	DC - 18.0 GHz
VSWR max.	1.03 + 0.003 x f(GHz)
Coupling	SMP Full Detent Test Conn.

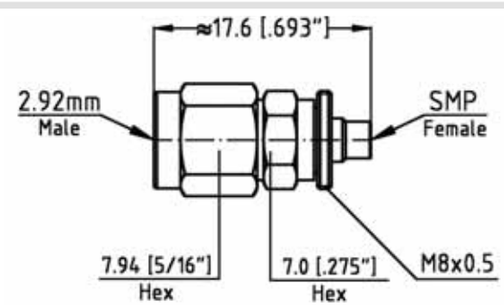

Dimensions shown are Inches over Millimeters or vice versa. Standard units have stainless finish (last 2 digits of the P/N are -02). Interfaces are per DIN 47 223, DIN 47 226, IEC 169-4, IEC 169-7, IEC 169-8, IEC 457-2, IEC 60169-5, IEEE 287, MIL-PRF-39012, MIL DTL-24044, MIL DTL-3643,MIL-STD-348B, where applicable

Spectrum Elektrotechnik GmbH
Germany
www.spectrum-et.com
sales@spectrum-et.com
Phone: +49 / 89 / 35 48 04 0
Fax: +49 / 89 / 35 48 04 90

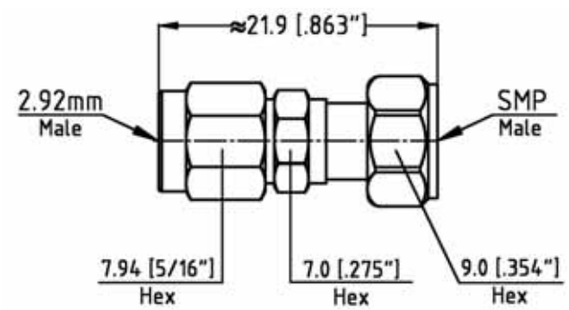

Part - No.	8801-KMTJ-02
Connectors	SMP-male to 2.92mm-male
Frequency	DC - 40.0 GHz
VSWR max.	1.03 + 0.003 x f(GHz)
Coupling	SMP Smooth Bore Test Conn.

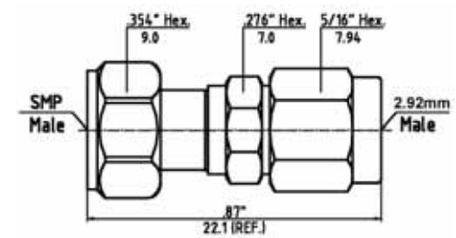

Part - No.	8802-KMTJ-02
Connectors	SMP-male to 2.92mm-male
Frequency	DC - 40.0 GHz
VSWR max.	1.03 + 0.003 x f(GHz)
Coupling	SMP Smooth Bore Test Conn.

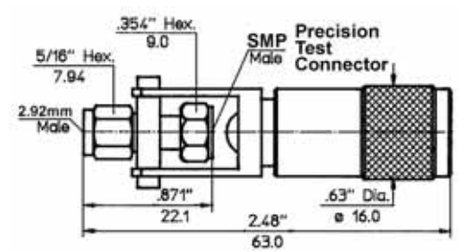

Part - No.	8801-KMTB-02
Connectors	SMP-male to 2.92mm-male
Frequency	DC - 18.0 GHz
VSWR max.	1.03 + 0.003 x f(GHz)
Coupling	SMP Smooth Bore Test Conn.

Precision Unit

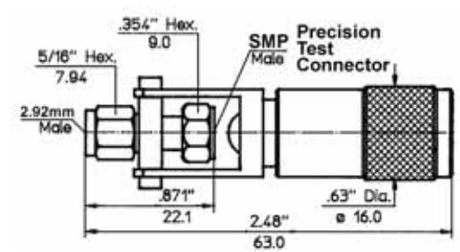

Part - No.	8801-KMTD-02
Connectors	SMP-male to 2.92mm-male
Frequency	DC - 18.0 GHz
VSWR max.	1.03 + 0.003 x f(GHz)
Coupling	SMP Smooth Bore Test Conn.

Commercial Unit

Dimensions shown are Inches over Millimeters or vice versa. Standard units have stainless finish (last 2 digits of the P/N are -02). Interfaces are per DIN 47 223, DIN 47 226, IEC 169-4, IEC 169-7, IEC 169-8, IEC 457-2, IEC 60169-5, IEEE 287, MIL-PRF-39012, MIL DTL-24044, MIL DTL-3643,MIL-STD-348B, where applicable

Spectrum Elektrotechnik GmbH
Germany
www.spectrum-et.com
sales@spectrum-et.com
Phone: +49 / 89 / 35 48 04 0
Fax: +49 / 89 / 35 48 04 90

Part - No.	8801-KFTB-02
Connectors	SMP-male to 2.92mm-fem.
Frequency	DC - 18.0 GHz
VSWR max.	1.03 + 0.003 x f(GHz)
Coupling	SMP Smooth Bore Test Conn.

Precision Unit

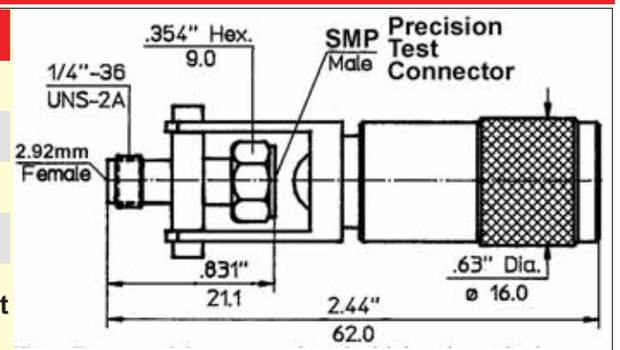

Part - No.	8801-KFTD-02
Connectors	SMP-male to 2.92mm-fem.
Frequency	DC - 18.0 GHz
VSWR max.	1.03 + 0.003 x f(GHz)
Coupling	SMP Smooth Bore Test Conn.

Commercial Unit

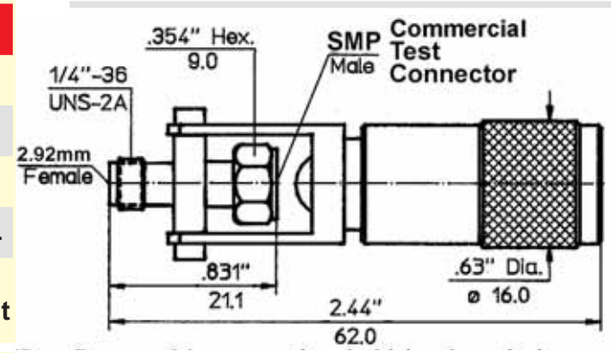

Part - No.	8801-KFTJ-02
Connectors	SMP-male to 2.92mm-fem.
Frequency	DC - 18.0 GHz
VSWR max.	1.03 + 0.003 x f(GHz)
Coupling	SMP Smooth Bore Test Conn.

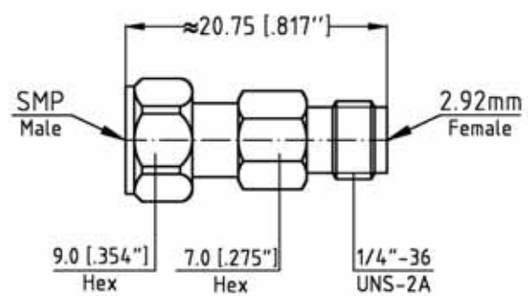

Part - No.	8802-KFTJ-02
Connectors	SMP-male to 2.92mm-fem.
Frequency	DC - 40.0 GHz
VSWR max.	1.03 + 0.003 x f(GHz)
Coupling	SMP Smooth Bore Test Conn.

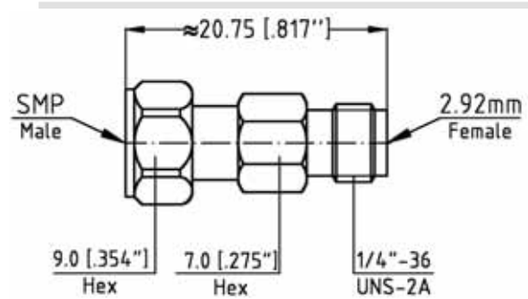

Dimensions shown are Inches over Millimeters or vice versa. Standard units have stainless finish (last 2 digits of the P/N are -02). Interfaces are per DIN 47 223, DIN 47 226, IEC 169-4, IEC 169-7, IEC 169-8, IEC 457-2, IEC 60169-5, IEEE 287, MIL-PRF-39012, MIL DTL-24044, MIL DTL-3643,MIL-STD-348B, where applicable

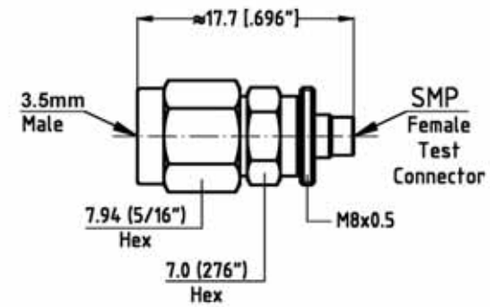

Part - No.	8001-MP91-04
Connectors	SMP-fem. to 3.5mm-male
Frequency	DC -18.0 GHz
VSWR max.	1.03 + 0.003 x f(GHz)
Coupling	SMP Smooth Bore Test Conn.

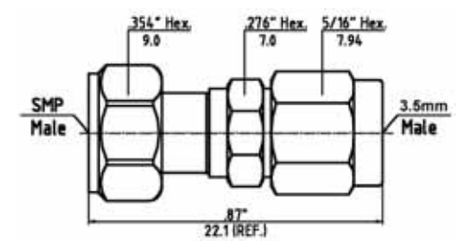

Part - No.	8001-MJ91-02
Connectors	SMP-male to 3.5mm-male
Frequency	DC -26.5 GHz
VSWR max.	1.03 + 0.003 x f(GHz)
Coupling	SMP Smooth Bore Test Conn.

Dimensions shown are Inches over Millimeters or vice versa. Standard units have stainless finish (last 2 digits of the P/N are -02). Interfaces are per DIN 47 223, DIN 47 226, IEC 169-4, IEC 169-7, IEC 169-8, IEC 457-2, IEC 60169-5, IEEE 287, MIL-PRF-39012, MIL DTL-24044, MIL DTL-3643,MIL-STD-348B, where applicable

Part - No.	8801-TP92-02
Connectors	SMP-fem. to 3.5mm-fem.
Frequency	DC -18.0 GHz
VSWR max.	1.03 + 0.003 x f(GHz)
Coupling	SMP Smooth Bore Test Conn.

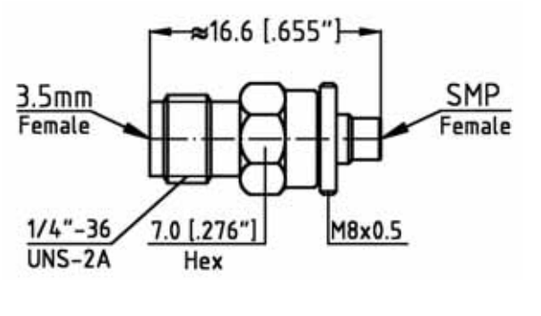

Part - No.	8801-TL92-02
Connectors	SMP-fem. to 3.5mm-fem.
Frequency	DC -18.0 GHz
VSWR max.	1.03 + 0.003 x f(GHz)
Coupling	SMP Limited Detent Test Conn.

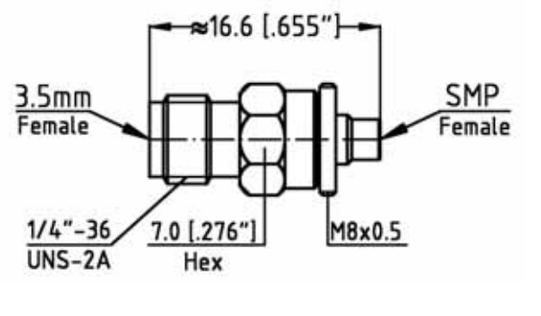

Part - No.	8801-TF92-02
Connectors	SMP-fem. to 3.5mm-fem.
Frequency	DC -18.0 GHz
VSWR max.	1.03 + 0.003 x f(GHz)
Coupling	SMP Full Detent Test Conn.

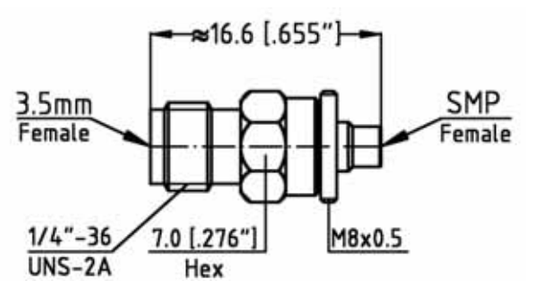

Although our catalog incorporates a very comprehensive range of products, due to our program of continuous development, there is no way that it will contain every product we manufacture. Please consult the factory for the product you require.

Telephone: +49-89-3548-040 Facsimile: +49-89-3548-0490
E-mail: sales@spectrum-et.com www.spectrum-et.com

Dimensions shown are Inches over Millimeters or vice versa. Standard units have stainless finish (last 2 digits of the P/N are -02). Interfaces are per DIN 47 223, DIN 47 226, IEC 169-4, IEC 169-7, IEC 169-8, IEC 457-2, IEC 60169-5, IEEE 287, MIL-PRF-39012, MIL DTL-24044, MIL DTL-3643,MIL-STD-348B, where applicable

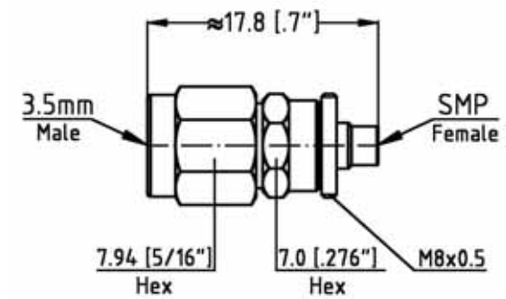

Part - No.	8801-TP91-02
Connectors	SMP-fem. to 3.5mm-male
Frequency	DC -18.0 GHz
VSWR max.	1.03 + 0.003 x f(GHz)
Coupling	SMP Smooth Bore Test Conn.

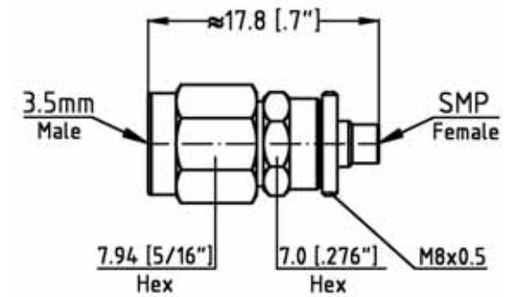

Part - No.	8801-TL91-02
Connectors	SMP-fem. to 3.5mm-male
Frequency	DC -18.0 GHz
VSWR max.	1.03 + 0.003 x f(GHz)
Coupling	SMP Limited Detent Test Conn.

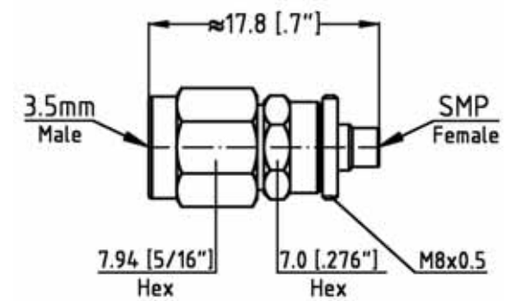

Part - No.	8801-TF91-02
Connectors	SMP-fem. to 3.5mm-male
Frequency	DC -18.0 GHz
VSWR max.	1.03 + 0.003 x f(GHz)
Coupling	SMP Full Detent Test Conn.

You do not find the Adapter you need for an application? You need technical support? You need price and delivery information? Please contact your nearest Spectrum Representative, or please contact us direct.

Telephone: +49-89-3548-040 Facsimile: +49-89-3548-0490
e-mail: sales@spectrum-et.com www.spectrum-et.com

Dimensions shown are Inches over Millimeters or vice versa. Standard units have stainless finish (last 2 digits of the P/N are -02). Interfaces are per DIN 47 223, DIN 47 226, IEC 169-4, IEC 169-7, IEC 169-8, IEC 457-2, IEC 60169-5, IEEE 287, MIL-PRF-39012, MIL DTL-24044, MIL DTL-3643,MIL-STD-348B, where applicable

Part - No.	8801-TJ92-02
Connectors	SMP-male to 3.5mm-fem.
Frequency	DC -18.0 GHz
VSWR max.	1.03 + 0.003 x f(GHz)
Coupling	SMP Smooth Bore Test Conn.

Precision Unit

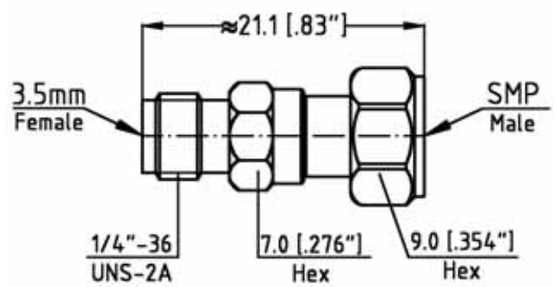

Part - No.	8801-TC92-02
Connectors	SMP-male to 3.5mm-fem.
Frequency	DC -18.0 GHz
VSWR max.	1.03 + 0.003 x f(GHz)
VSWR max.	1.06 + 0.005 x f(GHz)

Commercial Unit

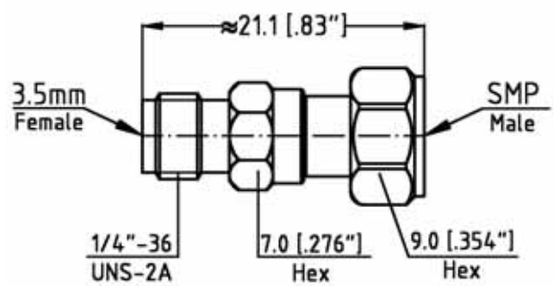

Part - No.	8801-TD92-02
Connectors	SMP-male to 3.5mm-fem.
Frequency	DC -18.0 GHz
VSWR max.	1.03 + 0.003 x f(GHz)
Coupling	SMP Smooth Bore Test Conn.

Commercial Unit

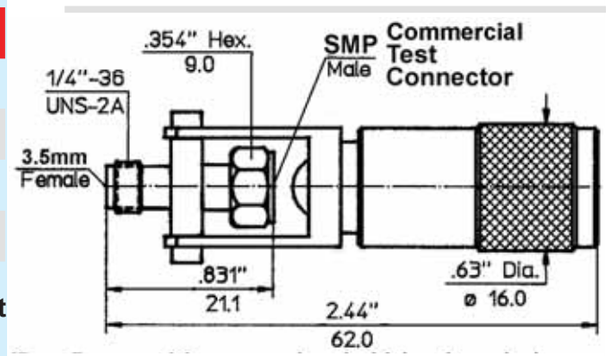

Part - No.	8801-TB92-02
Connectors	SMP-male to 3.5mm-fem.
Frequency	DC -18.0 GHz
VSWR max.	1.03 + 0.003 x f(GHz)
Coupling	SMP Smooth Bore Test Conn.

Precision Unit

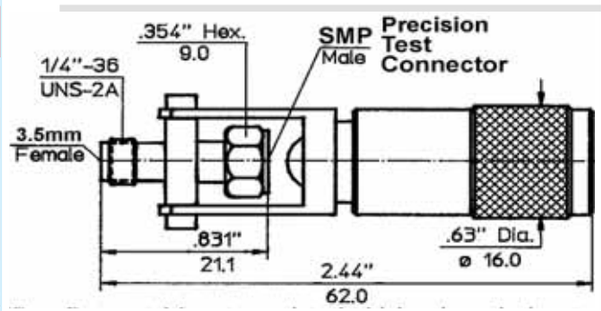

Dimensions shown are Inches over Millimeters or vice versa. Standard units have stainless finish (last 2 digits of the P/N are -02). Interfaces are per DIN 47 223, DIN 47 226, IEC 169-4, IEC 169-7, IEC 169-8, IEC 457-2, IEC 60169-5, IEEE 287, MIL-PRF-39012, MIL DTL-24044, MIL DTL-3643,MIL-STD-348B, where applicable

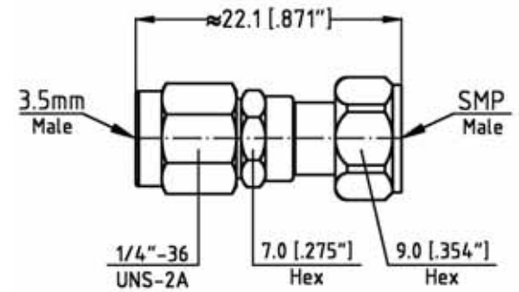

Part - No.	8801-TC91-02
Connectors	SMP-male to 3.5mm-male
Frequency	DC -18.0 GHz
VSWR max.	1.03 + 0.003 x f(GHz)
Coupling	Smooth Bore

Commercial Unit

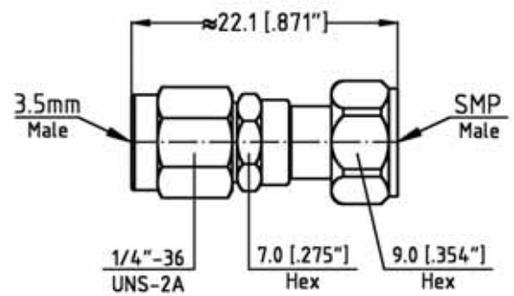

Part - No.	8801-TJ91-02
Connectors	SMP-male to 3.5mm-male
Frequency	DC -18.0 GHz
VSWR max.	1.03 + 0.003 x f(GHz)
Coupling	Smooth Bore

Commercial Unit

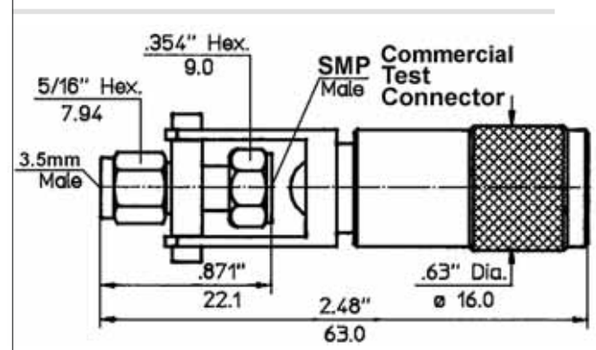

Part - No.	8801-TD91-02
Connectors	SMP-male to 3.5mm-male
Frequency	DC -18.0 GHz
VSWR max.	1.03 + 0.003 x f(GHz)
Coupling	SMP Smooth Bore Test Conn.

Commercial Unit

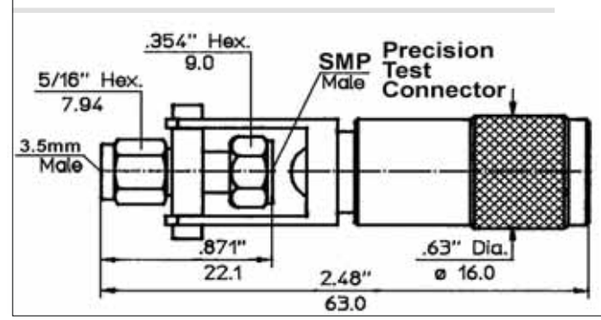

Part - No.	8801-TB91-02
Connectors	SMP-male to 3.5mm-male
Frequency	DC -18.0 GHz
VSWR max.	1.03 + 0.003 x f(GHz)
Coupling	SMP Smooth Bore Test Conn.

Precision Unit

Dimensions shown are Inches over Millimeters or vice versa. Standard units have stainless finish (last 2 digits of the P/N are -02). Interfaces are per DIN 47 223, DIN 47 226, IEC 169-4, IEC 169-7, IEC 169-8, IEC 457-2, IEC 60169-5, IEEE 287, MIL-PRF-39012, MIL DTL-24044, MIL DTL-3643,MIL-STD-348B, where applicable

In- and Between-Series CalKit Adapters SMP

If your choice of LRL Cal-Kit Adapter is not shown in this section, please refer to the Table below to determine other possible locations. Should you not find your adapter listed in any section, please consult the factory or your Spectrum Elektrotechnik Area Representative.

SMP LRL CalKit Adapters	Section	Page
LRL Overview	T	1
LRL Introduction		2
SMP Adapters In-Series		4
2.92mm to 2.92mm		7

Although our catalog incorporates a very comprehensive range of products, due to our program of continuous development, there is no way that it will contain every product we manufacture. Please consult the factory for the product you require.
To improve our Standard Products we reserve the right to make changes. Specifications are therefore subject to change without notice.

Dimensions shown are Inches over Millimeters or vice versa. Standard units have stainless finish (last 2 digits of the P/N are -02). Interfaces are per DIN 47 223, DIN 47 226, IEC 169-4, IEC 169-7, IEC 169-8, IEC 457-2, IEC 60169-5, IEEE 287, MIL-PRF-39012, MIL DTL-24044, MIL DTL-3643,MIL-STD-348B, where applicable

INTRODUCTION: The LRL (Line Reflective Line), or TRL (Through Reflective Line) Kits are using a different approach. To calibrate the system a Short is needed and Throughlines of two different lengths. The Throughlines are supposed to be ideal. This means that not only the impedance of 50 Ohms has to be maintained perfectly. Center Contacts are allowed to be recessed within allowed limits. The Center Contacts of the Throughlines are therefore available in different lengths, taking care of the recessed Contacts at the Test Equipment. Therefore for every Outer Conductor of a Throughline a number of Center Contacts are supplied, from "0" Recession/Protrusion to max. Protrusion, equaling the max. allowable Recession of the Test Equipment Connector.

EQUIPMENT PROVIDED: Each Calibration Kit contains as a minimum for the Standard Calibration Kit: two Shorts (male and female), two Throughlines each (female/female, male/female, male/male) in different lengths and a Disc for the Calibration Characteristics. The Disc is supplied either for the Vector Network Analyzers of Keysight, or Anritsu, and is ready to be used. The Professional Calibration Kit contains also Interface Gauges, Calibration Blocks for the Interface Gauges, and a Torque Wrench.

INTERFACE GAUGES: If you are using a Standard Calibration Kit and did not purchase any Connector Interface Gauges, you should not use the longer Center Contact. If you have Interface Gauges available you should first measure the Recession of the Center Contacts in the Connectors of the Vector Network Analyzer, or if you are using Test Cables, the Recession of the Center Contacts in the connectors of those cable assemblies. Then you should select the correct oversize Center Pin, taking care of the Recession at those Connectors.

T

THROUGHLINES: As mentioned earlier, the Throughlines are supplied as outer conductors and different lengths center conductors. To install the Throughlines, please proceed as follows:

1. Measure the Recession of the Test Connectors.
2. Select the appropriate oversize Center Pin (oversize in length).
3. Install the Outer Conductor of the Throughline on one of the Test Connectors.
4. Insert the appropriate Center Conductor into the Outer Conductor of the Throughline, using the especially designed Insertion Tool.
5. Extract the Insertion Tool and connect carefully the second Test Connector.

TORQUE WRENCHES: In order to ensure proper mating of the connectors, it is highly recommended to always use Torque Wrenches. They do not only ensure proper connection of the components but they also help to prevent over-torquing, which may damage or degrade the performance of these expensive ideal components.

CONNECTORS SERIES: LRL/TRL Calibration Kits are availabe in the following connector series: SMP and 2.92mm.

PHASE STABLE CABLE ASSEMBLIES: Spectrum Elektrotechnik GmbH offers a series of Phase Stable Assemblies, fitted at one side with the appropriate NMD connector for direct connection with the Vector Network Analyzers of Keysight and Anritsu, and with 2.4mm, 2.92mm, 3.5mm, SMP, N, TNC, etc. at the other end of the Assembly.

Dimensions shown are Inches over Millimeters or vice versa. Standard units have stainless finish (last 2 digits of the P/N are -02). Interfaces are per DIN 47 223, DIN 47 226, IEC 169-4, IEC 169-7, IEC 169-8, IEC 457-2, IEC 60169-5, IEEE 287, MIL-PRF-39012, MIL DTL-24044, MIL DTL-3643,MIL-STD-348B, where applicable

Spectrum Elektrotechnik GmbH
Germany
www.spectrum-et.com
sales@spectrum-et.com
Phone: +49 / 89 / 35 48 04 0
Fax: +49 / 89 / 35 48 04 90

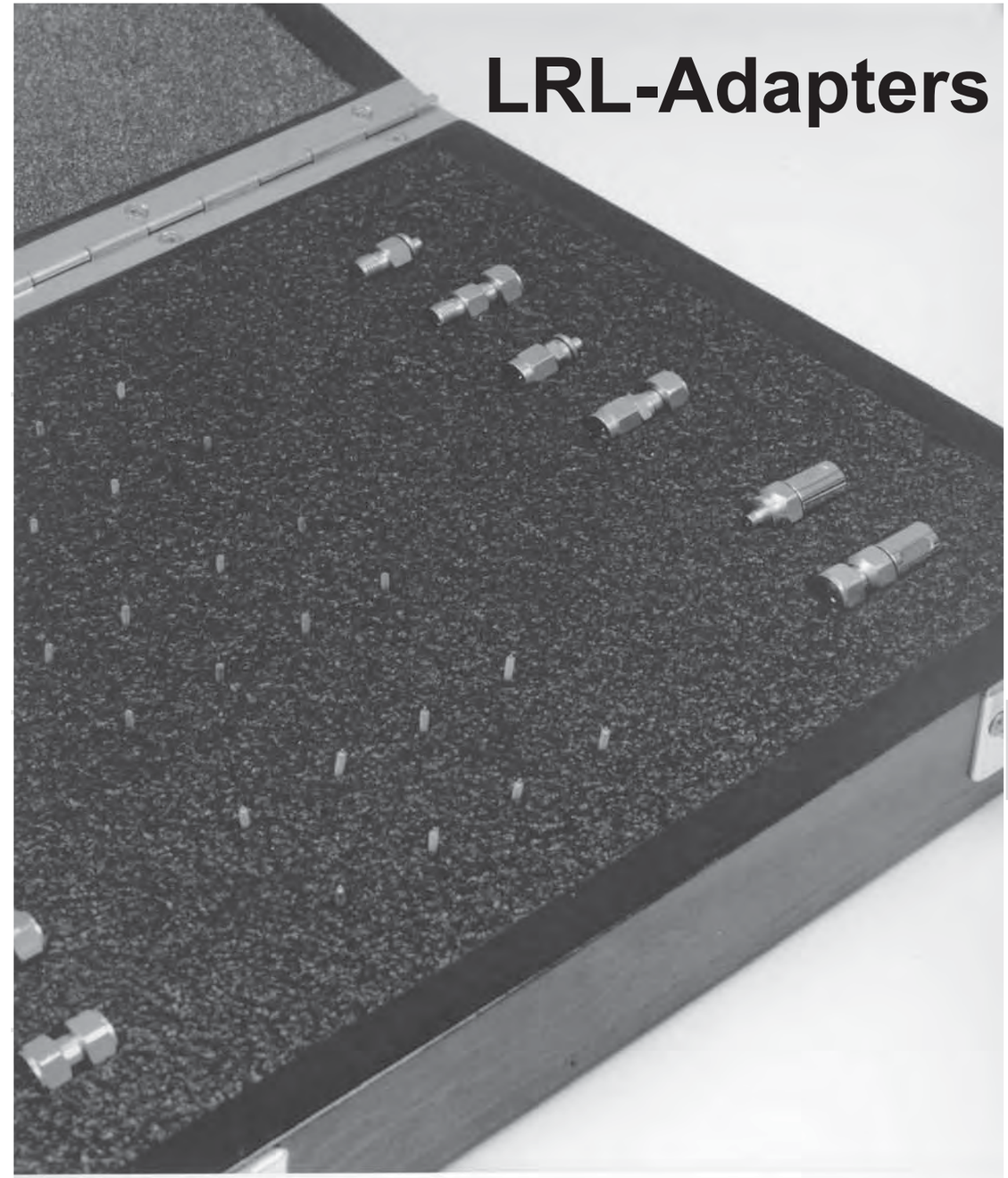

A typical LRL CalKit consists of a number of outer conductors and center conductors.

T

Part - No.	8LRM-MPMP-02
Connectors	SMP-fem. to SMP-fem.
Frequency	DC - 40.0 GHz
VSWR max.	1.03 + 0.003 x f(GHz)
Coupling	Smooth Bore

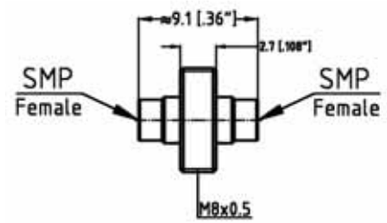

Part - No.	8LRL-MPMP-02
Connectors	SMP-fem. to SMP-fem.
Frequency	DC - 40.0 GHz
VSWR max.	1.03 + 0.003 x f(GHz)
Coupling	Smooth Bore

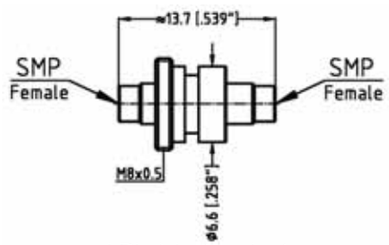

LRL-Adapter, short

Part - No.	8LRM-TJTP-02
Connectors	SMP-fem. to SMP-male
Frequency	DC - 40.0 GHz
VSWR max.	1.03 + 0.003 x f(GHz)
Coupling	Smooth Bore

Interface to Interface Length: 9.14 mm

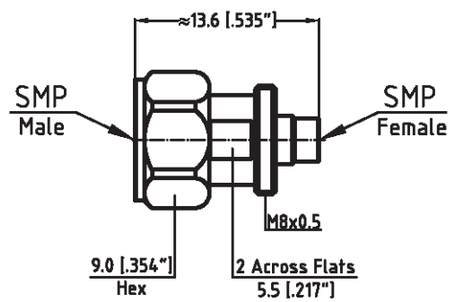

Part - No.	8LRN-TJTP-02
Connectors	SMP-fem. to SMP-male
Frequency	DC - 40.0 GHz
VSWR max.	1.03 + 0.003 x f(GHz)
Coupling	Smooth Bore

Interface to Interface Length: 11.98 mm

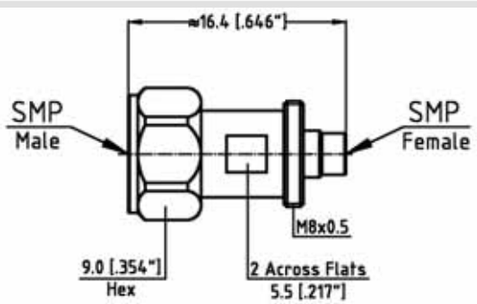

Dimensions shown are Inches over Millimeters or vice versa. Standard units have stainless finish (last 2 digits of the P/N are -02). Interfaces are per DIN 47 223, DIN 47 226, IEC 169-4, IEC 169-7, IEC 169-8, IEC 457-2, IEC 60169-5, IEEE 287, MIL-PRF-39012, MIL DTL-24044, MIL DTL-3643,MIL-STD-348B, where applicable

Spectrum Elektrotechnik GmbH
Germany
www.spectrum-et.com
sales@spectrum-et.com
Phone: +49 / 89 / 35 48 04 0
Fax: +49 / 89 / 35 48 04 90

Part - No.	8LRM-MJMP-02
Connectors	SMP-fem. to SMP-male
Frequency	DC - 40.0 GHz
VSWR max.	1.03 + 0.003 x f(GHz)
Coupling	Smooth Bore

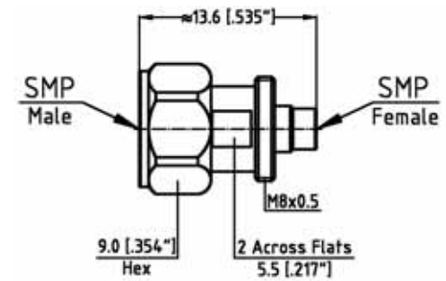

Part - No.	8LRL-MJMP-02
Connectors	SMP-fem. to SMP-male
Frequency	DC - 40.0 GHz
VSWR max.	1.03 + 0.003 x f(GHz)
Coupling	Smooth Bore

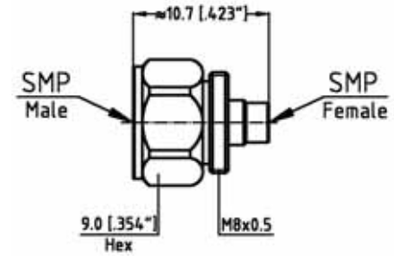

Part - No.	8LRL-TJTP-02
Connectors	SMP-fem. to SMP-male
Frequency	DC - 40.0 GHz
VSWR max.	1.03 + 0.003 x f(GHz)
Coupling	Smooth Bore

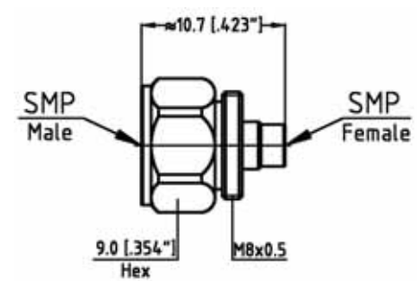

Part - No.	8LRP-TJTP-02
Connectors	SMP-fem. to SMP-male
Frequency	DC - 40.0 GHz
VSWR max.	1.03 + 0.003 x f(GHz)
Coupling	Smooth Bore

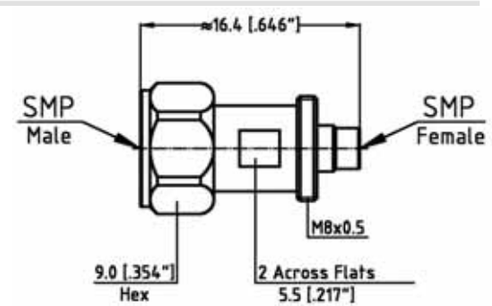

Dimensions shown are Inches over Millimeters or vice versa. Standard units have stainless finish (last 2 digits of the P/N are -02). Interfaces are per DIN 47 223, DIN 47 226, IEC 169-4, IEC 169-7, IEC 169-8, IEC 457-2, IEC 60169-5, IEEE 287, MIL-PRF-39012, MIL DTL-24044, MIL DTL-3643,MIL-STD-348B, where applicable

Spectrum Elektrotechnik GmbH
Germany
www.spectrum-et.com
sales@spectrum-et.com
Phone: +49 / 89 / 35 48 04 0
Fax: +49 / 89 / 35 48 04 90

Part - No.	8LRQ-TJTP-02
Connectors	SMP-fem. to SMP-male
Frequency	DC - 40.0 GHz
VSWR max.	1.03 + 0.003 x f(GHz)
Coupling	Smooth Bore

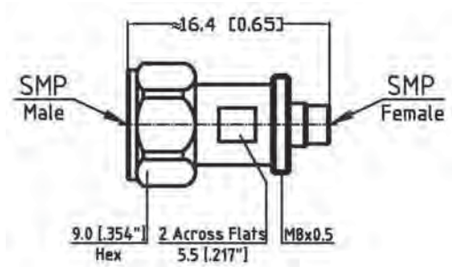

Part - No.	8LRL-MJMJ-02
Connectors	SMP-male to SMP-male
Frequency	DC - 40.0 GHz
VSWR max.	1.03 + 0.003 x f(GHz)
Coupling	Smooth Bore

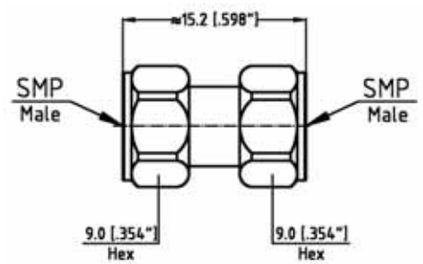

LRL-Adapter, short

Part - No.	8LRM-MJMJ-02
Connectors	SMP-male to SMP-male
Frequency	DC - 40.0 GHz
VSWR max.	1.03 + 0.003 x f(GHz)
Coupling	Smooth Bore

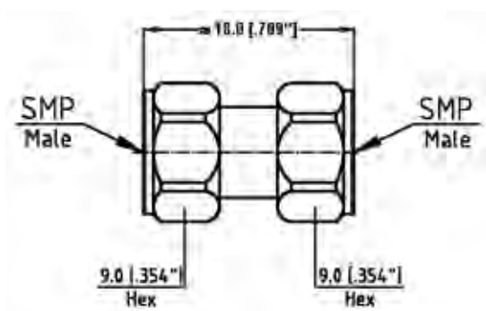

You do not find the Adapter you need for an application? You need technical support? You need price and delivery information? Please contact your nearest Spectrum Representative, or please contact us direct.

Telephone: +49-89-3548-040 Facsimile: +49-89-3548-0490

e-mail: sales@spectrum-et.com www.spectrum-et.com

Dimensions shown are Inches over Millimeters or vice versa. Standard units have stainless finish (last 2 digits of the P/N are -02). Interfaces are per DIN 47 223, DIN 47 226, IEC 169-4, IEC 169-7, IEC 169-8, IEC 457-2, IEC 60169-5, IEEE 287, MIL-PRF-39012, MIL DTL-24044, MIL DTL-3643,MIL-STD-348B, where applicable

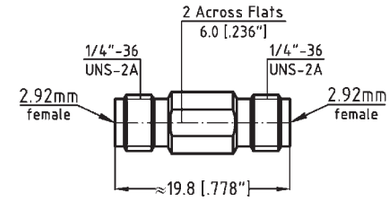

Part - No.	8LRM-KFKF-02
Connectors	2.92mm-fem. to 2.92mm-fem.
Frequency	DC - 40.0 GHz
VSWR max.	1.03 + 0.003 x f(GHz)

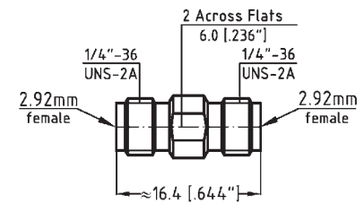

Part - No.	8LRL-KFKF-02
Connectors	2.92mm-fem. to 2.92mm-fem.
Frequency	DC - 40.0 GHz
VSWR max.	1.03 + 0.003 x f(GHz)

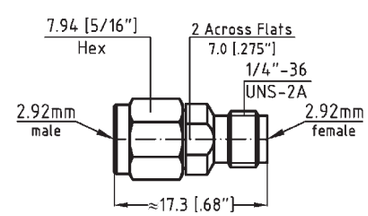

Part - No.	8LRL-KFKM-02
Connectors	2.92mm-fem. to 2.92mm-male
Frequency	DC - 40.0 GHz
VSWR max.	1.03 + 0.003 x f(GHz)

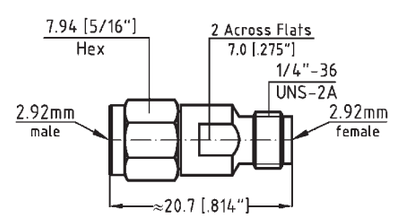

Part - No.	8LRM-KFKM-02
Connectors	2.92mm-fem. to 2.92mm-male
Frequency	DC - 40.0 GHz
VSWR max.	1.03 + 0.003 x f(GHz)

Dimensions shown are Inches over Millimeters or vice versa. Standard units have stainless finish (last 2 digits of the P/N are -02). Interfaces are per DIN 47 223, DIN 47 226, IEC 169-4, IEC 169-7, IEC 169-8, IEC 457-2, IEC 60169-5, IEEE 287, MIL-PRF-39012, MIL DTL-24044, MIL DTL-3643,MIL-STD-348B, where applicable

Part - No.	8LRM-KMKM-02
Connectors	2.92mm-male to 2.92mm-male
Frequency	DC - 40.0 GHz
VSWR max.	1.03 + 0.003 x f(GHz)

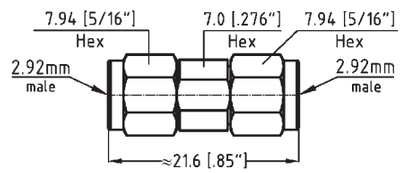

Part - No.	8LRL-KMKM-02
Connectors	2.92mm-male to 2.92mm-male
Frequency	DC - 40.0 GHz
VSWR max.	1.03 + 0.003 x f(GHz)

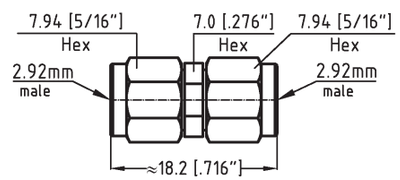

Dimensions shown are Inches over Millimeters or vice versa. Standard units have stainless finish (last 2 digits of the P/N are -02). Interfaces are per DIN 47 223, DIN 47 226, IEC 169-4, IEC 169-7, IEC 169-8, IEC 457-2, IEC 60169-5, IEEE 287, MIL-PRF-39012, MIL DTL-24044, MIL DTL-3643,MIL-STD-348B, where applicable

Spectrum Elektrotechnik GmbH
Germany
www.spectrum-et.com
sales@spectrum-et.com
Phone: +49 / 89 / 35 48 04 0
Fax: +49 / 89 / 35 48 04 90

In-Series and Between-Series Adapters SMPM

If your choice of SMPM Adapter is not shown in this section, please refer to the Table below to determine other possible locations. Should you not find your adapter listed in any section, please consult the factory or your Spectrum Elektrotechnik Area Representative.

SMPM	Section	Page
SMPM Overview & Specifications	U	1
SMPM In-Series		4
SMPM In-Series of equal electrical lengths		5
Between Series SMPM to 2.4mm of equ. el. lengths		6
Between Series SMPM to 2.92mm		8
Between Series SMPM to SMA		9

Although our catalog incorporates a very comprehensive range of products, due to our program of continuous development, there is no way that it will contain every product we manufacture. Please consult the factory for the product you require.
To improve our Standard Products we reserve the right to make changes. Specifications are therefore subject to change without notice.

Dimensions shown are Inches over Millimeters or vice versa. Standard units have stainless finish (last 2 digits of the P/N are -02). Interfaces are per DIN 47 223, DIN 47 226, IEC 169-4, IEC 169-7, IEC 169-8, IEC 457-2, IEC 60169-5, IEEE 287, MIL-PRF-39012, MIL DTL-24044, MIL DTL-3643,MIL-STD-348B, where applicable

Spectrum Elektrotechnik GmbH
Germany
www.spectrum-et.com
sales@spectrum-et.com
Phone: +49 / 89 / 35 48 04 0
Fax: +49 / 89 / 35 48 04 90

SMPM Specifications per MIL-STD-348B

The specifications below are general specifications for all SMPM connectors. Specific Data for VSWR, Insertion loss, R.F. leakage etc., are available from the factory upon request. Specifications in the following table are recommended for any procurement documents or drawings. In the event of any conflict between these specifications and other documentation, these specifications shall govern. These specifications are subject to change according to the latest revision.

REQUIREMENT	GENERAL SPECIFICATIONS
Standard Materials	STEEL corrosion resistant 1.4305 per DIN EN 10088; ASTM-A582 (303), or 1.4404 (316L) respectively. ALUMINUM AlMg4.5Mn per DIN DIN EN 1706, AlMgSi0.5 per DIN EN 1706, AlMgSi1 per DIN EN 1706 (6061-T6 per QQ-A-225/8). BRASS CuZn39Pb3 per DIN 17660 (QQ-B-626 (ASTM-B124), half hard). COPPER BERYLLIUM 33-25 CuBe2PbH per DIN17666(DIN CEN/TS;DIN SPEC 9700)(QQ-C530). TFE Fluorocarbon per DIN 52900 (ASTM-D-1710), or Thermoplast per DIN EN ISO 10350, or PEI per in-house specification respectively for higher temperature applications. SILICONE RUBBER per DIN ISO 3601)(A-A-59588,Class IIB) Gr. 50 - 75. BORIUM NITRITE Dielectric for high power applications per in-house specification
Finish for COPPER BERYLLIUM STAINLESS STEEL ALUMINUM BRASS VARIOUS	Center Contacts shall be gold plated to a minimum thickness of .00005-inch in accordance with ASTM-B-488, Type III, Code C, Class 1.25 shall be passivated per ASTM-A967 Conductive Parts shall have an iridited finish per MIL-DTL-5541 Other parts, such as Coupling Nuts and Back-Bodies shall be anodized per MIL-A-8625. .00003 inch (0.8 µm) min. gold plating per MIL-DTL-45204, or nickel plating per QQ-N-290, as specified. Imoloy .0001 inch (2.5 µm) min. plating, consisting of 55% Copper / 20% Zinc / 25% Tin (on special request).
Design	The design shall be such that the outline dimensions in this catalog are met. In addition, the assembled connector shall meet the interface dimensions.
ELECTRICAL	
Frequency Range	DC - 65.0 GHz min.
Insulation Resistance	The insulation resistance shall not be less than 5,000 megohms.
Voltage Standing Wave Ratio (VSWR)	1.06 + .005 x f (GHz)
Contact Resistance	The center contact resistance drop shall not exceed 6.0 milliohms and the outer contact resistance drop shall not exceed 2.0 milliohms.
Dielectric Withstanding Voltage	The magnitude of the test voltage shall be 375 volts rms at sea level.
RF Leakage	RF Leakage: 80 dB max @ 3 GHz; approx. 60 dB @ 26.5 GHz (at full detent proper mated)
Insertion Loss	(.04 SQT(f(GHz))) dB
MECHANICAL	
Connector Durability	The connector is to be tested and its mating connector shall be subjected to 500 (smooth bore) respectively 100 (full detent) insertions and withdrawal cycles. The connector shall show no evidence of mechanical failure and the connector shall meet the mating characteristic requirements.
Force to Engage	The force required to engage is 4.5lbs.(20N) typical for Full Detent and 2.5lbs (11.1N) for Smooth Bore
Force to Disengage.	The force required to disengage is 6.5lbs.(28.9N) typical for Full Detent and 1.5lbs (6.7N) for Smooth Bore
Center Contacts Captivation Force	1.5lbs. (6.7N) min.
ENVIRONMENTAL	
Corrosion (Salt Spray)	Specification MIL-STD-202, Method 101, Test Condition B. The salt solution shall be 5%.
Vibration	Specification MIL-STD-202, Method 204, Test Condition D.
Shock	Specification MIL-STD-202, Method 213, Test Condition I.
Thermal Shock	Specification MIL-STD-202, Method 107, Test Condition B, rating -65 °C to +165 °C.
Moisture Resistance	Specification MIL-STD-202, Method 106. Step 7b (vibration) shall be omitted. Insulation resistance shall be 200 megohms min. within 5 minutes of removal from humidity.
Corona Level	The connector shall not exhibit breakdown (corona) when the applied voltage is 350 volts rms and the altitude is 70,000 feet.

U

Dimensions shown are Inches over Millimeters or vice versa. Standard units have stainless finish (last 2 digits of the P/N are -02). Interfaces are per DIN 47 223, DIN 47 226, IEC 169-4, IEC 169-7, IEC 169-8, IEC 457-2, IEC 60169-5, IEEE 287, MIL-PRF-39012, MIL DTL-24044, MIL DTL-3643,MIL-STD-348B, where applicable

Spectrum Elektrotechnik GmbH
Germany
www.spectrum-et.com
sales@spectrum-et.com
Phone: +49 / 89 / 35 48 04 0
Fax: +49 / 89 / 35 48 04 90

Interface Mating Dimensions SMPM to MIL-STD-348B

SMPM Female

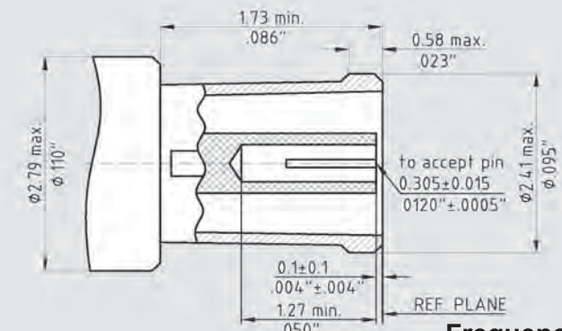

Frequency: DC-65.0GHz min.

SMPM Male smooth bore

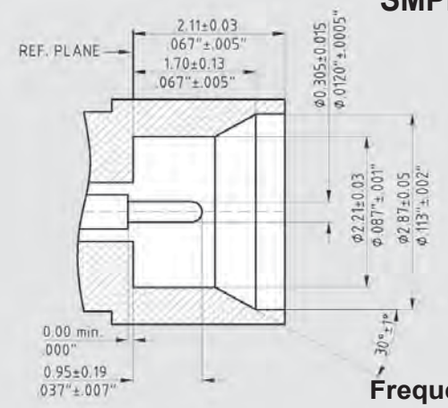

Frequency: DC-65.0GHz min.

SMPM Male full detent

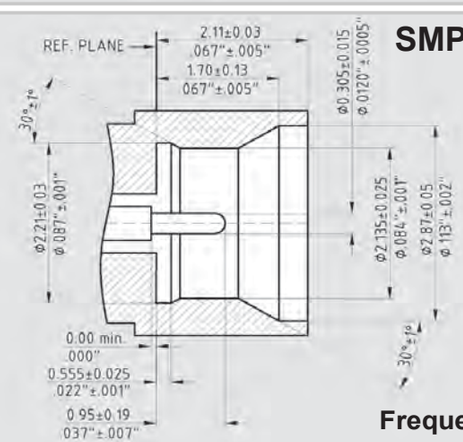

Frequency: DC-65.0GHz min.

U

Dimensions shown are Inches over Millimeters or vice versa. Standard units have stainless finish (last 2 digits of the P/N are -02). Interfaces are per DIN 47 223, DIN 47 226, IEC 169-4, IEC 169-7, IEC 169-8, IEC 457-2, IEC 60169-5, IEEE 287, MIL-PRF-39012, MIL DTL-24044, MIL DTL-3643,MIL-STD-348B, where applicable

Spectrum Elektrotechnik GmbH
Germany
www.spectrum-et.com
sales@spectrum-et.com
Phone: +49 / 89 / 35 48 04 0
Fax: +49 / 89 / 35 48 04 90

Part - No.	8001-QFQF-04
Connectors	SMPM-fem. to SMPM-fem.
Frequency	DC - 50.0 GHz
VSWR max.	1.06 + 0.005 x f(GHz)

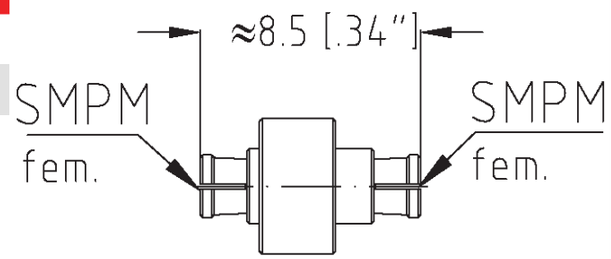

Part - No.	8002-QFQF-04
Connectors	SMPM-fem. to SMPM-fem.
Frequency	DC - 50.0 GHz
VSWR max.	1.06 + 0.005 x f(GHz)

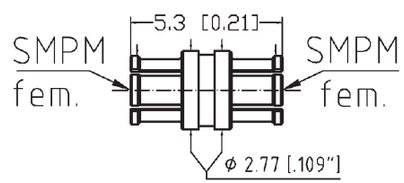

Dimensions shown are Inches over Millimeters or vice versa. Standard units have stainless finish (last 2 digits of the P/N are -02). Interfaces are per DIN 47 223, DIN 47 226, IEC 169-4, IEC 169-7, IEC 169-8, IEC 457-2, IEC 60169-5, IEEE 287, MIL-PRF-39012, MIL DTL-24044, MIL DTL-3643,MIL-STD-348B, where applicable

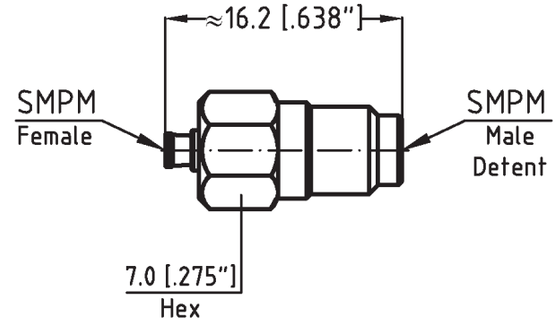

Part - No.	8801-QFQM-04
Connectors	SMPM-fem. to SMPM-male
Frequency	DC - 50.0 GHz
VSWR max.	1.06 + 0.005 x f(GHz)
Coupling	Full Detent

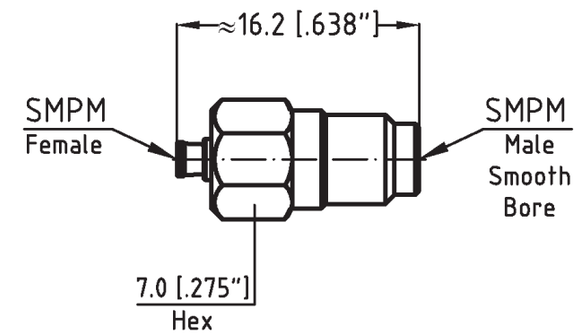

Part - No.	8802-QFQM-04
Connectors	SMPM-fem. to SMPM-male
Frequency	DC - 50.0 GHz
VSWR max.	1.06 + 0.005 x f(GHz)
Coupling	Smooth Bore

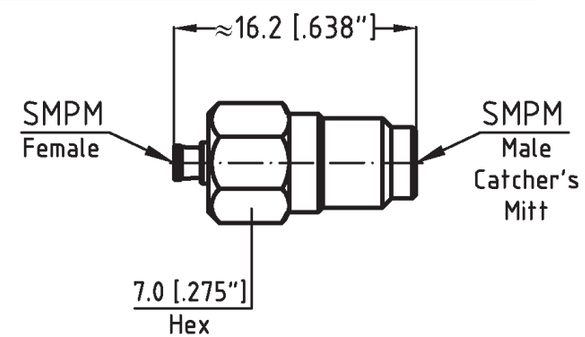

Part - No.	8803-QFQM-04
Connectors	SMPM-fem. to SMPM-male
Frequency	DC - 50.0 GHz
VSWR max.	1.06 + 0.005 x f(GHz)
Coupling	Catcher's Mitt

You do not find the Adapter you need for an application? You need technical support? You need price and delivery information? Please contact your nearest Spectrum Representative, or please contact us direct.

Telephone: +49-89-3548-040 Facsimile: +49-89-3548-0490
e-mail: sales@spectrum-et.com www.spectrum-et.com

Dimensions shown are Inches over Millimeters or vice versa. Standard units have stainless finish (last 2 digits of the P/N are -02). Interfaces are per DIN 47 223, DIN 47 226, IEC 169-4, IEC 169-7, IEC 169-8, IEC 457-2, IEC 60169-5, IEEE 287, MIL-PRF-39012, MIL DTL-24044, MIL DTL-3643,MIL-STD-348B, where applicable

Part - No.	8801-HMQF-42
Connectors	SMPM-fem. to 2.4mm-male
Frequency	DC - 50.0 GHz
VSWR max.	1.06 + 0.005 x f(GHz)

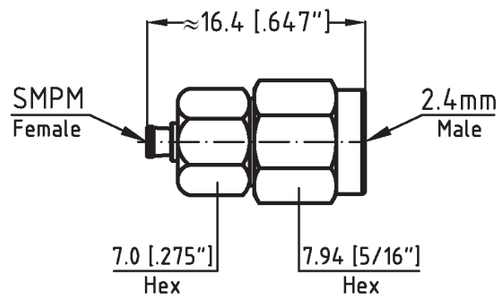

Part - No.	8801-HFQM-42
Connectors	SMPM-male to 2.4mm-fem.
Frequency	DC - 50.0 GHz
VSWR max.	1.06 + 0.005 x f(GHz)
Coupling	Full Detent

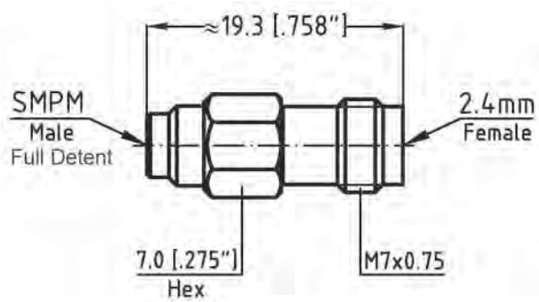

Part - No.	8802-HFQM-42
Connectors	SMPM-male to 2.4mm-fem.
Frequency	DC - 50.0 GHz
VSWR max.	1.06 + 0.005 x f(GHz)
Coupling	Smooth Bore

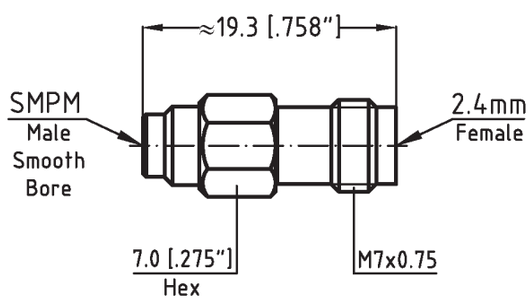

Part - No.	8803-HFQM-42
Connectors	SMPM-male to 2.4mm-fem.
Frequency	DC - 50.0 GHz
VSWR max.	1.06 + 0.005 x f(GHz)
Coupling	Catcher's Mitt

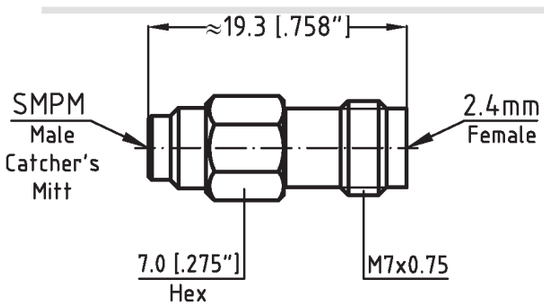

U

Dimensions shown are Inches over Millimeters or vice versa. Standard units have stainless finish (last 2 digits of the P/N are -02). Interfaces are per DIN 47 223, DIN 47 226, IEC 169-4, IEC 169-7, IEC 169-8, IEC 457-2, IEC 60169-5, IEEE 287, MIL-PRF-39012, MIL DTL-24044, MIL DTL-3643,MIL-STD-348B, where applicable

Spectrum Elektrotechnik GmbH
Germany
www.spectrum-et.com
sales@spectrum-et.com
Phone: +49 / 89 / 35 48 04 0
Fax: +49 / 89 / 35 48 04 90

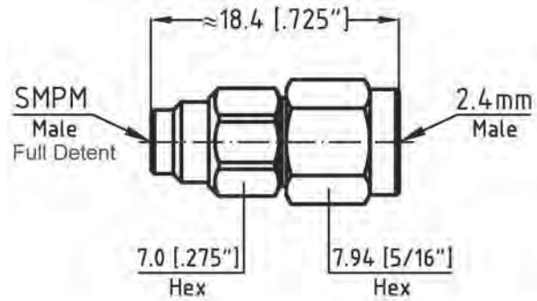

Part - No.	8801-HMQM-42
Connectors	SMPM-male to 2.4mm-male
Frequency	DC - 50.0 GHz
VSWR max.	1.06 + 0.005 x f(GHz)
Coupling	Full Detent

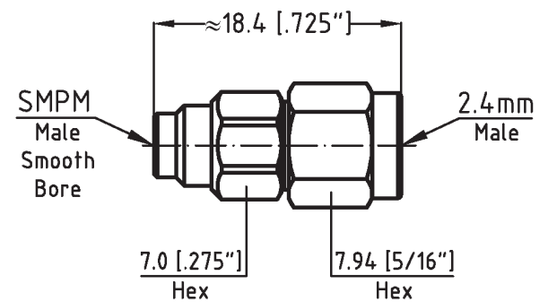

Part - No.	8802-HMQM-42
Connectors	SMPM-male to 2.4mm-male
Frequency	DC - 50.0 GHz
VSWR max.	1.06 + 0.005 x f(GHz)
Coupling	Smooth Bore

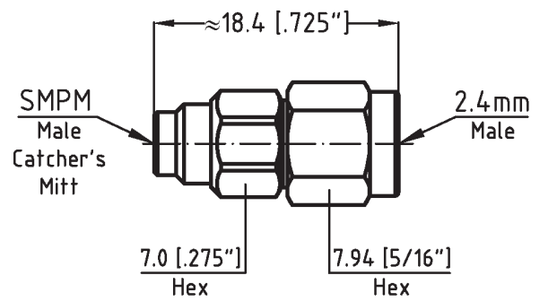

Part - No.	8803-HMQM-42
Connectors	SMPM-male to 2.4mm-male
Frequency	DC - 50.0 GHz
VSWR max.	1.06 + 0.005 x f(GHz)
Coupling	Catcher's Mitt

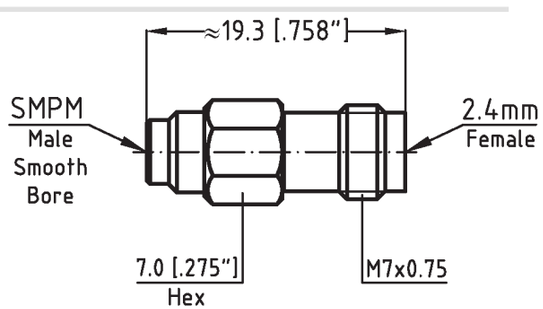

Part - No.	8001-HFAJ-02
Connectors	SMPM-male to 2.4mm-fem.
Frequency	DC - 50.0 GHz
VSWR max.	1.06 + 0.005 x f(GHz)
Coupling	Smooth Bore

U

Dimensions shown are Inches over Millimeters or vice versa. Standard units have stainless finish (last 2 digits of the P/N are -02). Interfaces are per DIN 47 223, DIN 47 226, IEC 169-4, IEC 169-7, IEC 169-8, IEC 457-2, IEC 60169-5, IEEE 287, MIL-PRF-39012, MIL DTL-24044, MIL DTL-3643,MIL-STD-348B, where applicable

Spectrum Elektrotechnik GmbH
Germany
www.spectrum-et.com
sales@spectrum-et.com
Phone: +49 / 89 / 35 48 04 0
Fax: +49 / 89 / 35 48 04 90

Part - No.	8001-KFQF-42
Connectors	SMPM-fem. to 2.92mm-fem.
Frequency	DC - 40.0 GHz
VSWR max.	1.06 + 0.005 x f(GHz)

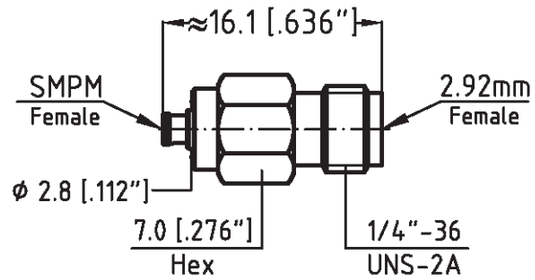

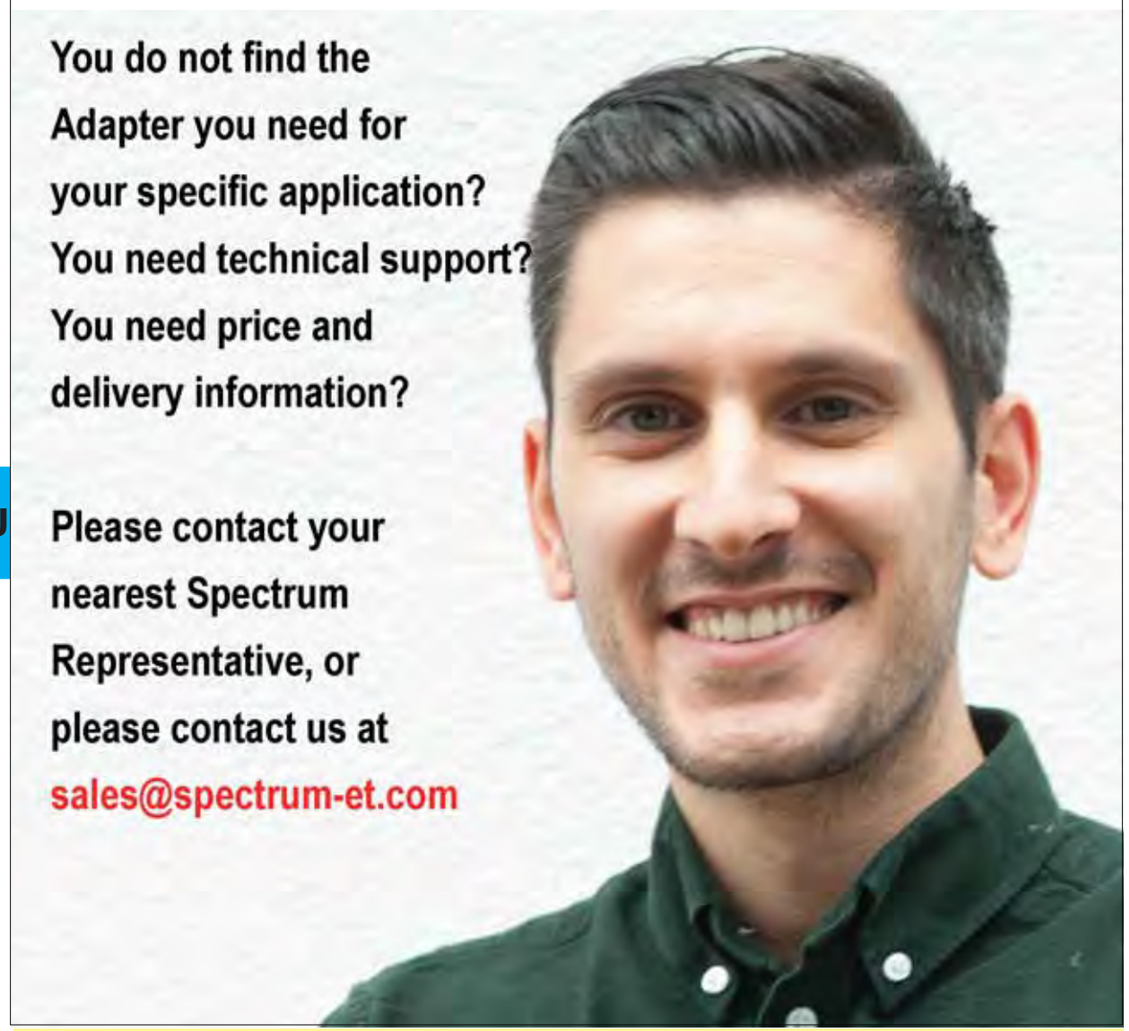

Dimensions shown are Inches over Millimeters or vice versa. Standard units have stainless finish (last 2 digits of the P/N are -02). Interfaces are per DIN 47 223, DIN 47 226, IEC 169-4, IEC 169-7, IEC 169-8, IEC 457-2, IEC 60169-5, IEEE 287, MIL-PRF-39012, MIL DTL-24044, MIL DTL-3643,MIL-STD-348B, where applicable

Spectrum Elektrotechnik GmbH
Germany
www.spectrum-et.com
sales@spectrum-et.com
Phone: +49 / 89 / 35 48 04 0
Fax: +49 / 89 / 35 48 04 90

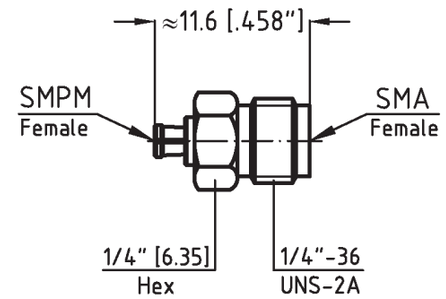

Part - No.	8002-QF21-02
Connectors	SMPM-fem. to SMA-fem.
Frequency	DC - 18.0 GHz
VSWR max.	1.06 + 0.005 x f(GHz)

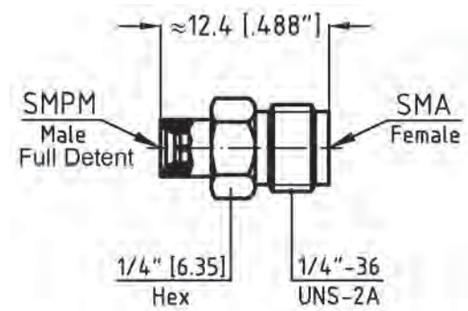

Part - No.	8001-QM21-02
Connectors	SMPM-male to SMA-fem.
Frequency	DC - 18.0 GHz
VSWR max.	1.06 + 0.005 x f(GHz)
Coupling	Full Detent

In this catalog only the Adapters are shown that may be of interest to the majority of the users. Spectrum has manufactured many more Adapters of this series and all the other series.

Therefore, should you need an Adapter for a special application, please contact our engineering staff. We even may have designed the unit already you need.

Telephone: +49-89-3548-040 Facsimile: +49-89-3548-0490
E-mail: sales@spectrum-et.com www.spectrum-et.com

Dimensions shown are Inches over Millimeters or vice versa. Standard units have stainless finish (last 2 digits of the P/N are -02). Interfaces are per DIN 47 223, DIN 47 226, IEC 169-4, IEC 169-7, IEC 169-8, IEC 457-2, IEC 60169-5, IEEE 287, MIL-PRF-39012, MIL DTL-24044, MIL DTL-3643,MIL-STD-348B, where applicable

Spectrum Elektrotechnik GmbH
Germany
www.spectrum-et.com
sales@spectrum-et.com
Phone: +49 / 89 / 35 48 04 0
Fax: +49 / 89 / 35 48 04 90

U

In-Series and Between-Series Adapters SSMA

If your choice of SSMA Adapter is not shown in this section, please refer to the Table below to determine other possible locations. Should you not find your adapter listed in any section, please consult the factory or your Spectrum Elektrotechnik Area Representative.

SSMA	Section	Page
Overview and Specifications	V	1
Between Series SSMA to 2.92mm		4
Between Series SSMA to SMA		5

V

Although our catalog incorporates a very comprehensive range of products, due to our program of continuous development, there is no way that it will contain every product we manufacture. Please consult the factory for the product you require.
To improve our Standard Products we reserve the right to make changes. Specifications are therefore subject to change without notice.

Dimensions shown are Inches over Millimeters or vice versa. Standard units have stainless finish (last 2 digits of the P/N are -02). Interfaces are per DIN 47 223, DIN 47 226, IEC 169-4, IEC 169-7, IEC 169-8, IEC 457-2, IEC 60169-5, IEEE 287, MIL-PRF-39012, MIL DTL-24044, MIL DTL-3643,MIL-STD-348B, where applicable

SSMA Specifications to MIL-PRF-39012

The specifications below are general specifications for all SSMA connectors. Specific Data for VSWR, Insertion Loss, R.F. leakage, etc., are available from the factory upon request. Specifications in the following table are recommended for any procurement documents or drawings. In the event of any conflict between these specifications and General Specifications MIL-PRF-39012, these specifications shall govern. These specifications are subject to change according to the latest revision.

REQUIREMENT	GENERAL SPECIFICATIONS
Standard Materials	STEEL corrosion resistant 1.4305 per DIN EN 10088; ASTM-A582 (303), or 1.4404 (316L) respectively. ALUMINUM AlMg4.5Mn per DIN DIN EN 1706, AlMgSi0.5 per DIN EN 1706, AlMgSi1 per DIN EN 1706 (6061-T6 per QQ-A-225/8). BRASS CuZn39Pb3 per DIN 17660 (QQ-B-626 (ASTM-B124), half hard). COPPER BERYLLIUM 33-25 CuBe2PbH per DIN17666(DIN CEN/TS;DIN SPEC 9700)(QQ-C530). TFE Fluorocarbon per DIN 52900 (ASTM-D-1710) SILICONE RUBBER per DIN ISO 3601)(A-A-59588,Class IIB) Gr. 50 - 75. BORIUM NITRITE Dielectric for high power applications per in-house specification
Finish for COPPER BERYLLIUM STAINLESS STEEL ALUMINUM BRASS VARIOUS	Center Contacts shall be gold plated to a minimum thickness of .00005-inch in accordance with ASTM-B-488, Type III, Code C, Class 1.25 shall be passivated per ASTM-A967 Conductive Parts shall have an iridited finish per MIL-DTL-5541 Other parts, such as Coupling Nuts and Back-Bodies shall be anodized per MIL-A-8625. .00003 inch (0.8 µm) min. gold plating per MIL-DTL-45204, or nickel plating per QQ-N-290, as specified. Imoloy .0001 inch (2.5 µm) min. plating, consisting of 55% Copper / 20% Zinc / 25% Tin (on special request).
Design	The design shall be such that the outline dimensions in this catalog are met. In addition, the assembled connector shall meet the interface dimensions.
ELECTRICAL	
Frequency Range	DC - 35.0 GHz
Insulation Resistance	The insulation resistance shall not be less than 10,000 megohms.
Voltage Standing Wave Ratio (VSWR)	1.06 + .005 x f (GHz)
Contact Resistance	The center contact resistance drop shall not exceed 2.0 milliohms and the outer contact resistance drop shall not exceed 2.0 milliohms.
Dielectric Withstanding Voltage	The magnitude of the test voltage shall be 750 volts rms at sea level.
RF High Potential Withstanding Voltage	The RF high potential withstanding voltage is 500 volts rms at 5 MHz. Leakage is not applicable.
RF Leakage	- (100 - f (GHz)) dB
Insertion Loss	(.04 SQT(f(GHz))) dB
MECHANICAL	
Connector Durability	The connector is to be tested and its mating connector shall be subjected to 500 insertions and withdrawal cycles at 12 cycles per minute max. The connector shall show no evidence of mechanical failure and the connector shall meet the mating characteristic requirements.
Cable Retention Force	60 pounds (267 N) min.
Coupling Nut Retention Force	Not applicable for Female connectors. For male connectors, the axial force is 80 lbs (355.9 N) min.. The torque is 15 inch-pounds (1.7 Nm) min.
Force to Engage and Disengage	The torque required to engage and disengage shall not exceed 2 inch-pounds (0.226 Nm).
Longitudinal Force max.	Longitudinal force is not applicable.
Mating Characteristics	See interface dimensions shown on next page. Applicable to Females only: oversize pin .021 inch (.53 mm) min. dia. pin; .045 inch (1.14 mm) deep; insertion force 3 lbs. (13.34 N) max. with .0208 inch (.53 mm) min. dia.; withdrawal force 1.00 oz (.278 N) min. with .0195 inch (.5 mm) max. dia. pin.
Recommended Mating Torque	7 - 8 inch-pounds (0.8 - 0.9 Nm)
ENVIRONMENTAL	
Corrosion (Salt Spray)	Specification MIL-STD-202, Method 101, Test Condition B. The salt solution shall be 5%.
Vibration	Specification MIL-STD-202, Method 204, Test Condition D.
Shock	Specification MIL-STD-202, Method 213, Test Condition I.
Thermal Shock	Specification MIL-STD-202, Method 107, Test Condition B, except high temperature shall be + 200°C.
Moisture Resistance	Specification MIL-STD-202, Method 106. Step 7b (vibration) shall be omitted. Insulation resistance shall be 200 megohms min. within 5 minutes of removal from humidity.
Corona Level	The connector shall not exhibit breakdown (corona) when the applied voltage is 375 volts rms and the altitude is 70,000 feet.

Dimensions shown are Inches over Millimeters or vice versa. Standard units have stainless finish (last 2 digits of the P/N are -02). Interfaces are per DIN 47 223, DIN 47 226, IEC 169-4, IEC 169-7, IEC 169-8, IEC 457-2, IEC 60169-5, IEEE 287, MIL-PRF-39012, MIL DTL-24044, MIL DTL-3643,MIL-STD-348B, where applicable

Spectrum Elektrotechnik GmbH
Germany
www.spectrum-et.com
sales@spectrum-et.com
Phone: +49 / 89 / 35 48 04 0
Fax: +49 / 89 / 35 48 04 90

SSMA Interface Mating Dimensions

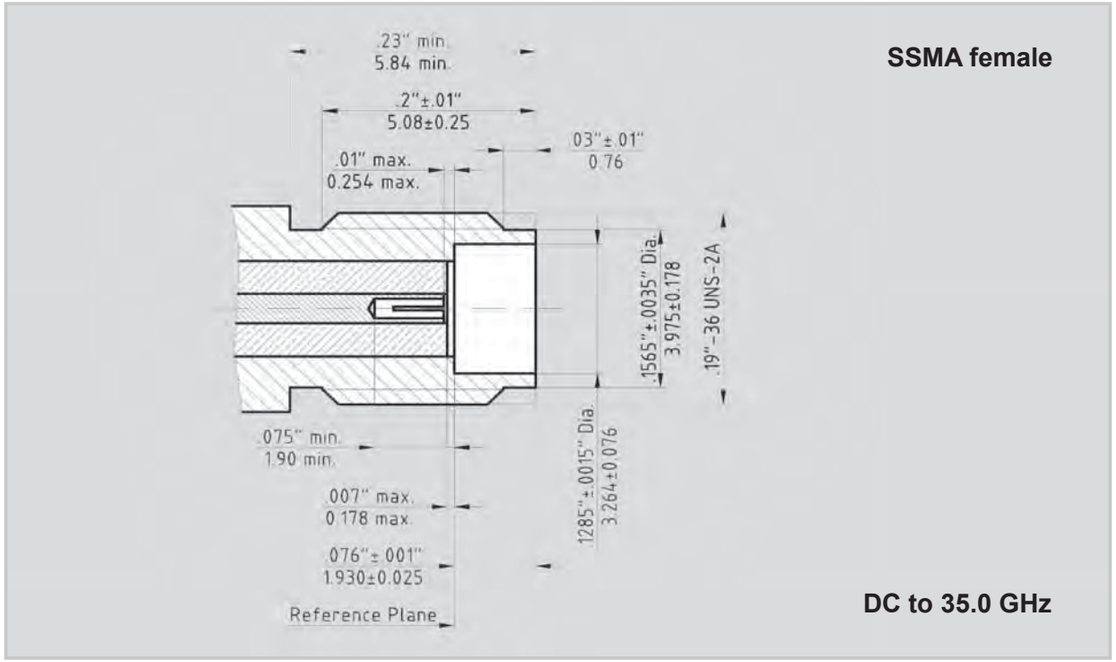

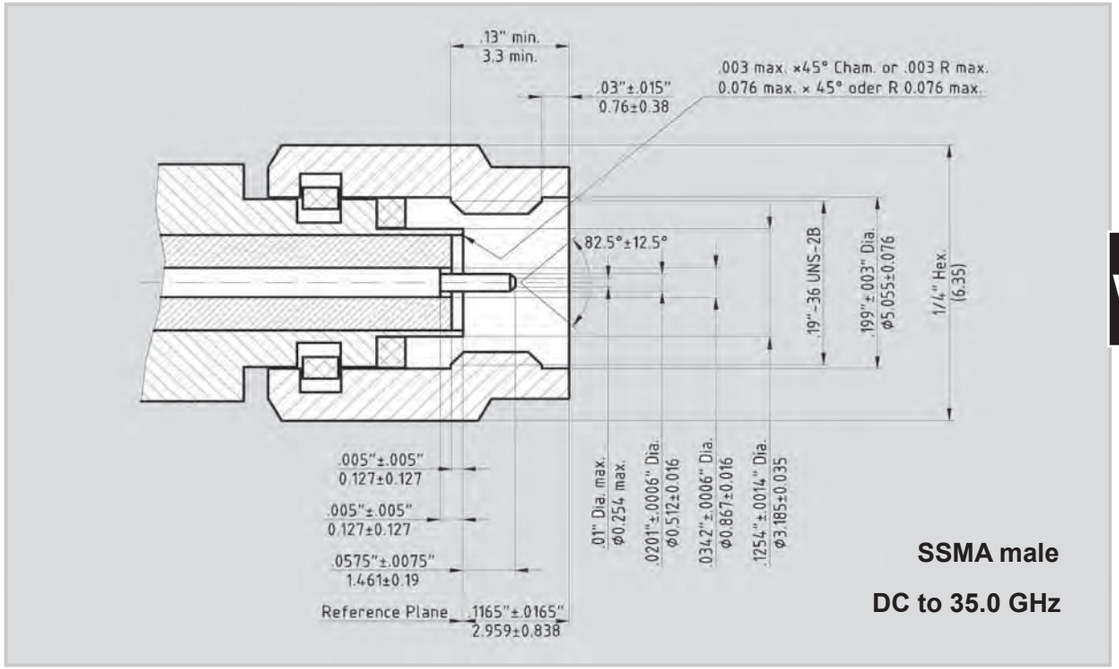

Dimensions shown are Inches over Millimeters or vice versa. Standard units have stainless finish (last 2 digits of the P/N are -02). Interfaces are per DIN 47 223, DIN 47 226, IEC 169-4, IEC 169-7, IEC 169-8, IEC 457-2, IEC 60169-5, IEEE 287, MIL-PRF-39012, MIL DTL-24044, MIL DTL-3643,MIL-STD-348B, where applicable

Spectrum Elektrotechnik GmbH
Germany
www.spectrum-et.com
sales@spectrum-et.com
Phone: +49 / 89 / 35 48 04 0
Fax: +49 / 89 / 35 48 04 90

Part - No.	8001-KFSX-02
Connectors	SSMA-male to 2.92mm-fem.
Frequency	DC - 35.0 GHz
VSWR max.	1.06 + 0.005 x f(GHz)

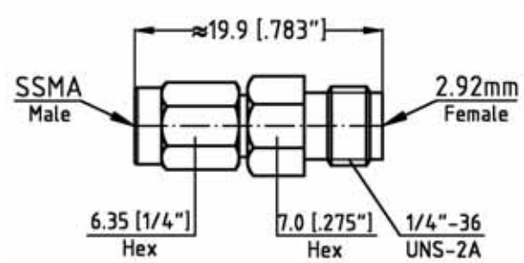

Part - No.	8001-KMSY-02
Connectors	SSMA-fem. to 2.92mm-male
Frequency	DC - 35.0 GHz
VSWR max.	1.06 + 0.005 x f(GHz)

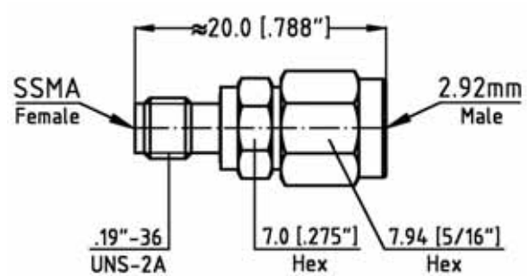

In this catalog only the Adapters are shown that may be of interest to the majority of the users. Spectrum has manufactured many more Adapters of this series and all the other series.

Therefore, should you need an Adapter for a special application, please contact our engineering staff. We even may have designed the unit already you need.

Telephone: +49-89-3548-040 Facsimile: +49-89-3548-0490
E-mail: sales@spectrum-et.com www.spectrum-et.com

Dimensions shown are Inches over Millimeters or vice versa. Standard units have stainless finish (last 2 digits of the P/N are -02). Interfaces are per DIN 47 223, DIN 47 226, IEC 169-4, IEC 169-7, IEC 169-8, IEC 457-2, IEC 60169-5, IEEE 287, MIL-PRF-39012, MIL DTL-24044, MIL DTL-3643,MIL-STD-348B, where applicable

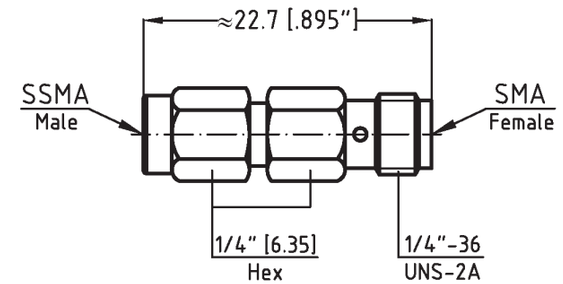

Part - No.	8001-SX21-02
Connectors	SSMA-male to SMA-fem.
Frequency	DC - 35.0 GHz
VSWR max.	1.06 + 0.005 x f(GHz)

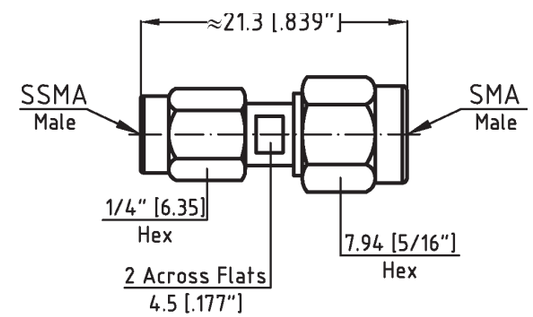

Part - No.	8001-SX11-02
Connectors	SSMA-male to SMA-male
Frequency	DC - 35.0 GHz
VSWR max.	1.06 + 0.005 x f(GHz)

Dimensions shown are Inches over Millimeters or vice versa. Standard units have stainless finish (last 2 digits of the P/N are -02). Interfaces are per DIN 47 223, DIN 47 226, IEC 169-4, IEC 169-7, IEC 169-8, IEC 457-2, IEC 60169-5, IEEE 287, MIL-PRF-39012, MIL DTL-24044, MIL DTL-3643,MIL-STD-348B, where applicable

Adapters, Attenuators, Blind Mate Connectors, Cable Assemblies, Circulators, Connectors, Delay Lines Duplexers, Equalizers, Fine Grain Equalizers, Gain Amplitude Equalizers, Isolators, Line Stretchers Machines, Phase Adjusters, Push - On Connectors & Adapters, Quick Connections, Terminations (Coax-) Tools, Waveguide to Coax-Adapters & Transmissions

That's what we are here for: Designing components to the customer's needs, operating in very harsh environment, withstanding highest power levels, having the lightest weight, and needing especially developed connections, etc., etc.

Never ever giving up -never ever being satisfied, constantly pushing the limits makes a Component STATE - OF - THE - ART, a SPECTRUM-ET COMPONENT

We will do anything possible to help making your job successful, promise!

Spectrum Elektrotechnik GmbH when Quality is needed

80905 Munich, Germany P.O. Box 450533
Telephone: +49-89-3548-040 Facsimile: +49-89-3548-0490
WWW.SPECTRUM-ET.COM * Email: sales@spectrum-et.com

HiPowerCirculatorsE

Between-Series Adapters SPM

If your choice of SPM Adapter is not shown in this section, please refer to the Table below to determine other possible locations. Should you not find your adapter listed in any section, please consult the factory or your Spectrum Elektrotechnik Area Representative.

SPM	Section	Page
SPM Overview & Specifications	W	1
The difference between SPM and SMA		4
Adapter Series SPM to SMA		5

Although our catalog incorporates a very comprehensive range of products, due to our program of continuous development, there is no way that it will contain every product we manufacture. Please consult the factory for the product you require.
To improve our Standard Products we reserve the right to make changes. Specifications are therefore subject to change without notice.

Dimensions shown are Inches over Millimeters or vice versa. Standard units have stainless finish (last 2 digits of the P/N are -02). Interfaces are per DIN 47 223, DIN 47 226, IEC 169-4, IEC 169-7, IEC 169-8, IEC 457-2, IEC 60169-5, IEEE 287, MIL-PRF-39012, MIL DTL-24044, MIL DTL-3643,MIL-STD-348B, where applicable

The specifications below are general specifications for all SPM connectors. Specific Data for VSWR, Insertion loss, R.F. leakage etc., are available from the factory upon request. Specifications in the following table are recommended for any procurement documents or drawings. In the event of any conflict between these specifications and other documentation, these specifications shall govern. These specifications are subject to change according to the latest revision.

REQUIREMENT	GENERAL SPECIFICATIONS
Standard Materials	STEEL corrosion resistant 1.4305 per DIN EN 10088; ASTM-A582 (303), or 1.4404 (316L) respectively. ALUMINUM AlMg4.5Mn per DIN DIN EN 1706, AlMgSi0.5 per DIN EN 1706, AlMgSi1 per DIN EN 1706 (6061-T6 per QQ-A-225/8). BRASS CuZn39Pb3 per DIN 17660 (QQ-B-626 (ASTM-B124), half hard). COPPER BERYLLIUM 33-25 CuBe2PbH per DIN17666(DIN CEN/TS;DIN SPEC 9700)(QQ-C530). TFE Fluorocarbon per DIN 52900 (ASTM-D-1710) SILICONE RUBBER per DIN ISO 3601)(A-A-59588,Class IIB) Gr. 50 - 75. BORIUM NITRITE Dielectric for high power applications per in-house specification
Finish for COPPER BERYLLIUM STAINLESS STEEL ALUMINUM BRASS VARIOUS	Center Contacts shall be gold plated to a minimum thickness of .00005-inch in accordance with ASTM-B-488, Type III, Code C, Class 1.25 shall be passivated per ASTM-A967 Conductive Parts shall have an iridited finish per MIL-DTL-5541 Other parts, such as Coupling Nuts and Back-Bodies shall be anodized per MIL-A-8625. .00003 inch (0.8 µm) min. gold plating per MIL-DTL-45204, or nickel plating per QQ-N-290, as specified. Imoloy .0001 inch (2.5 µm) min. plating, consisting of 55% Copper / 20% Zinc / 25% Tin (on special request).
Design	The design shall be such that the outline dimensions in this catalog are met. In addition, the assembled connector shall meet the interface dimensions.
ELECTRICAL	
Frequency Range	DC - 18.0 GHz min.
Insulation Resistance	The insulation resistance shall not be less than 5,000 megohms.
Voltage Standing Wave Ratio (VSWR)	1.06 + .005 * f (GHz)
Contact Resistance	The center contact resistance drop shall not exceed 3.0 milliohms and the outer contact resistance drop shall not exceed 2.0 milliohms.
Dielectric Withstanding Voltage	The magnitude of the test voltage shall be 1,000 volts rms at sea level.
RF High Potential Withstanding Voltage	The RF high potential withstanding voltage is 760 volts rms at 5 MHz. Leakage is not applicable.
RF Leakage	- (90 - f (GHz)) dB
Insertion Loss	(.05 SQT(f(GHz))) dB
MECHANICAL	
Connector Durability	The connector is to be tested and its mating connector shall be subjected to 500 insertions and withdrawal cycles at 12 cycles per minute max. The connector shall show no evidence of mechanical failure and the connector shall meet the mating characteristic requirements.
Cable Retention Force	60 pounds (267 N) min.
Coupling Nut Retention Force	Not applicable for Female connectors. For male connectors, the axial force is 100 lbs (445 N) max.. The torque is 15 inch-pounds (1.7 Nm) max.
Force to Engage and Disengage	The torque required to engage and disengage shall not exceed 2 inch-pounds (0.226 Nm).
Longitudinal Force max.	Longitudinal force is not applicable.
Mating Characteristics	See interface dimensions shown on next page. Applicable to Females only: oversize pin .0376 inch (.955 mm) max. dia. pin; ,.045 inch (1.14 mm) deep; insertion force 3 lbs. (13.34 N) max. with .037 inch (.94 mm) min. dia. pin; withdrawal force 1.00 oz (.278 N) min. with .0355
Recommended Mating Torque	inch (.90 mm) max. dia. pin. 7 - 10 inch-pounds (0.8 - 1.13 Nm)
ENVIRONMENTAL	
Corrosion (Salt Spray)	Specification MIL-STD-202, Method 101, Test Condition B. The salt solution shall be 5%.
Vibration	Specification MIL-STD-202, Method 204, Test Condition D.
Shock	Specification MIL-STD-202, Method 213, Test Condition I.
Thermal Shock	Specification MIL-STD-202, Method 107, Test Condition B, rating -65 °C to +165 °C.
Moisture Resistance	Specification MIL-STD-202, Method 106. Step 7b (vibration) shall be omitted. Insulation resistance shall be 200 megohms min. within 5 minutes of removal from humidity.
Corona Level	The connector shall not exhibit breakdown (corona) when the applied voltage is 350 volts rms and the altitude is 70,000 feet.

Dimensions shown are Inches over Millimeters or vice versa. Standard units have stainless finish (last 2 digits of the P/N are -02). Interfaces are per DIN 47 223, DIN 47 226, IEC 169-4, IEC 169-7, IEC 169-8, IEC 457-2, IEC 60169-5, IEEE 287, MIL-PRF-39012, MIL DTL-24044, MIL DTL-3643,MIL-STD-348B, where applicable

Spectrum Elektrotechnik GmbH
Germany
www.spectrum-et.com
sales@spectrum-et.com
Phone: +49 / 89 / 35 48 04 0
Fax: +49 / 89 / 35 48 04 90

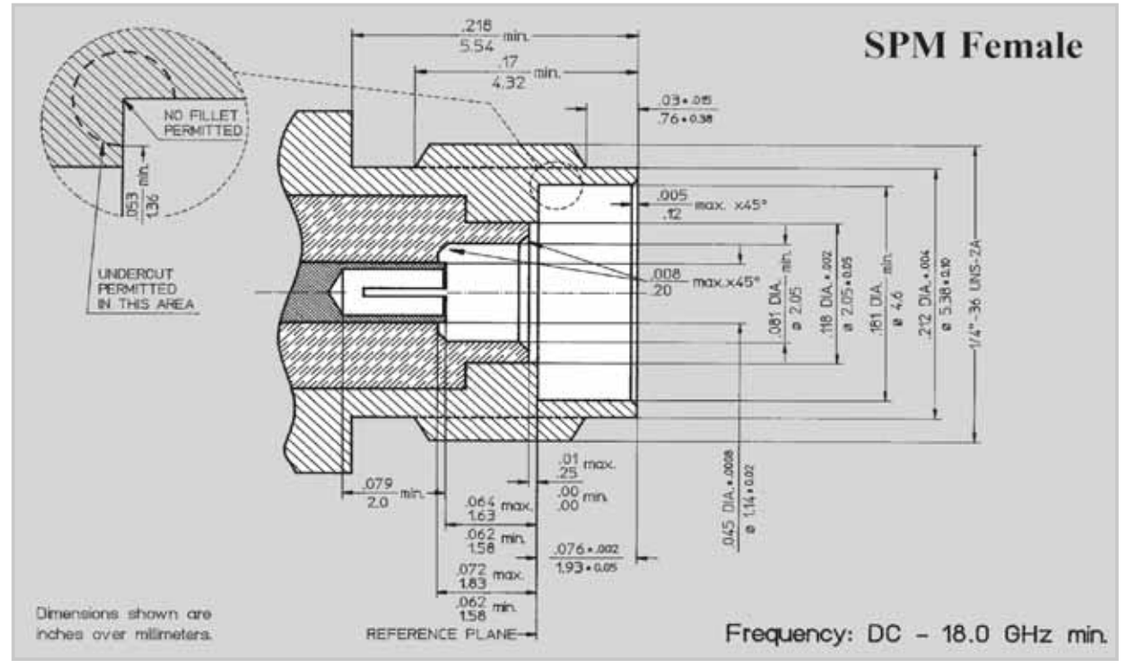

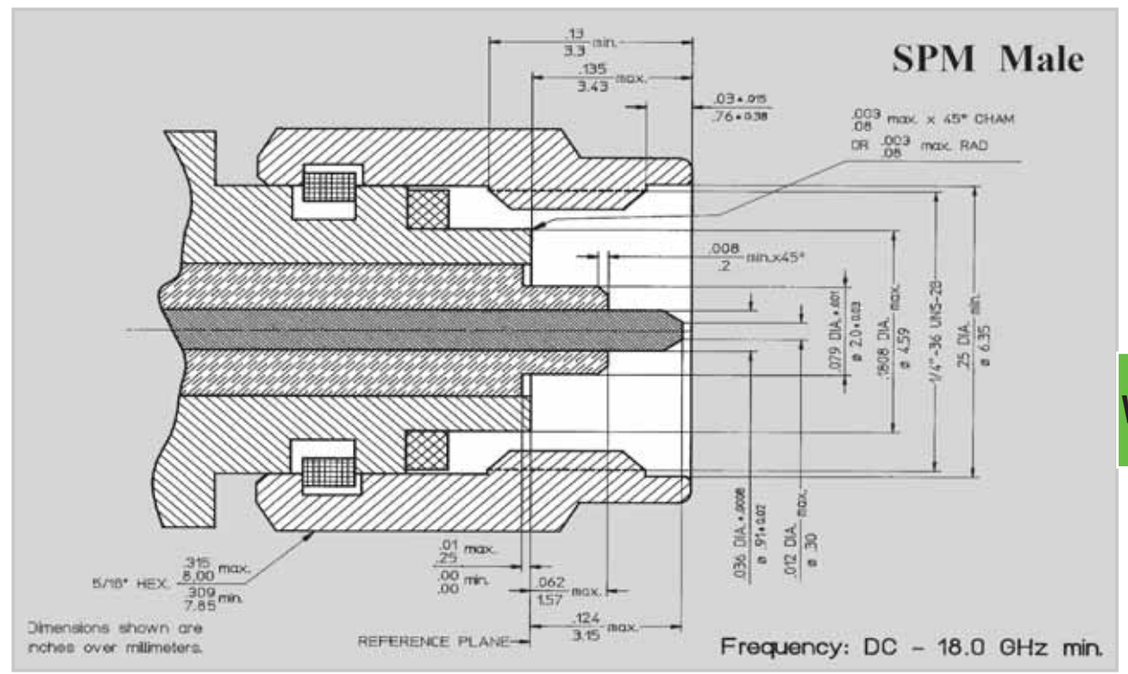

Dimensions shown are Inches over Millimeters or vice versa. Standard units have stainless finish (last 2 digits of the P/N are -02). Interfaces are per DIN 47 223, DIN 47 226, IEC 169-4, IEC 169-7, IEC 169-8, IEC 457-2, IEC 60169-5, IEEE 287, MIL-PRF-39012, MIL DTL-24044, MIL DTL-3643,MIL-STD-348B, where applicable

Spectrum Elektrotechnik GmbH
Germany
www.spectrum-et.com
sales@spectrum-et.com
Phone: +49 / 89 / 35 48 04 0
Fax: +49 / 89 / 35 48 04 90

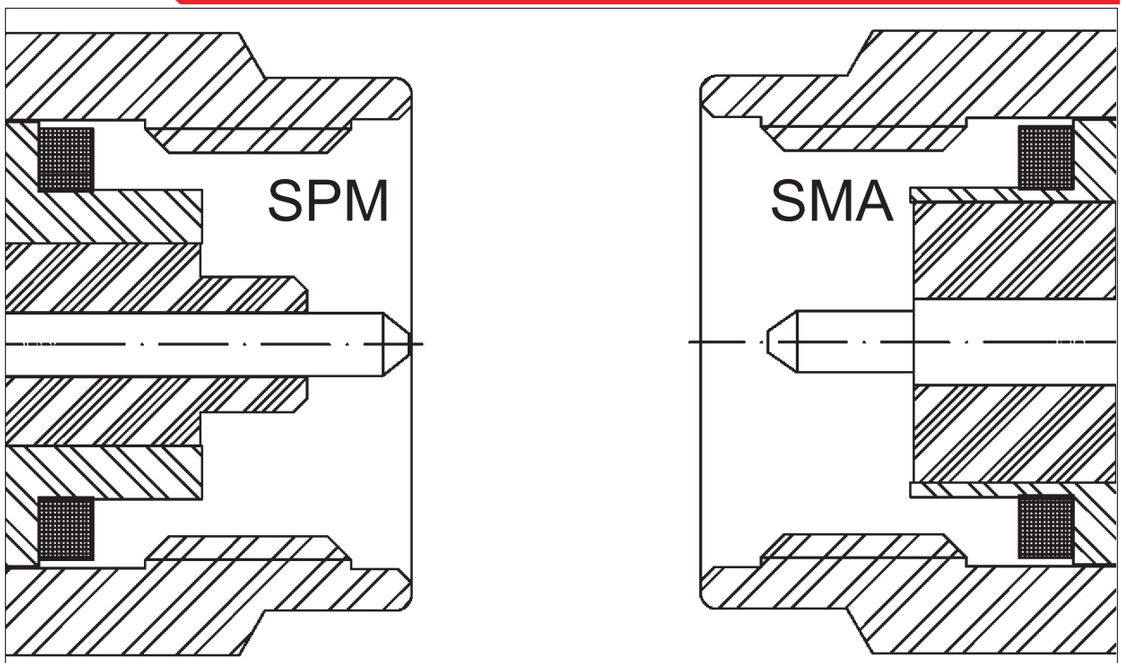

The difference between SMA and SPM is the overlapping dielectric at the SPM, for better arcing suppression at the interface.

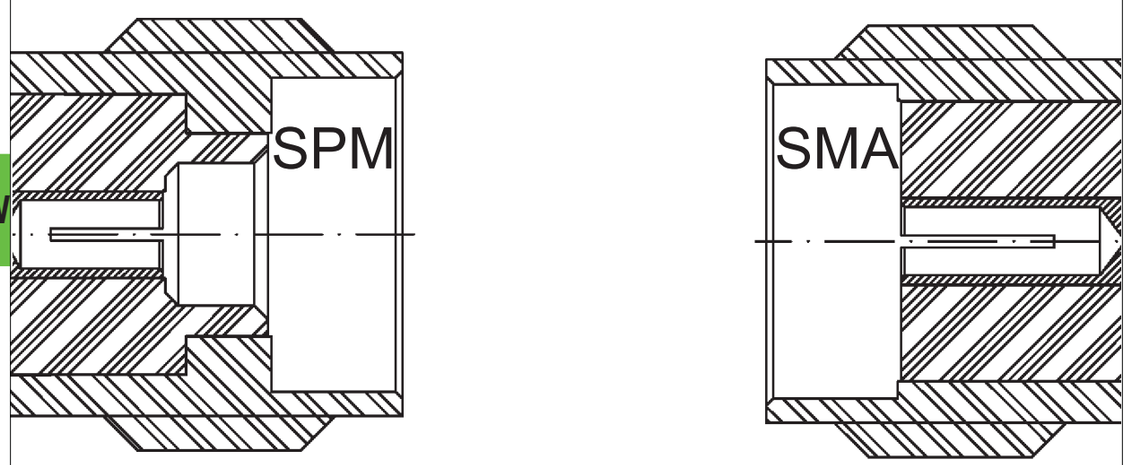

W

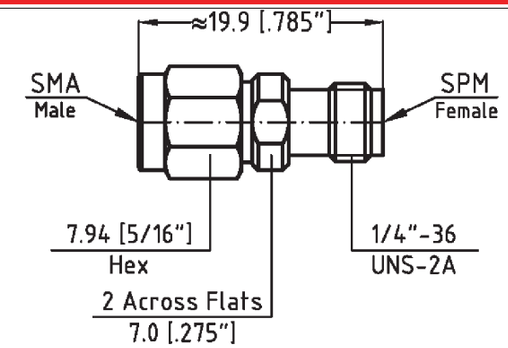

Part - No.	8001-PJ11-02
Connectors	SPM-fem. to SMA-male
Frequency	DC - 18.0 GHz
VSWR max.	1.06 + 0.005 x f(GHz)

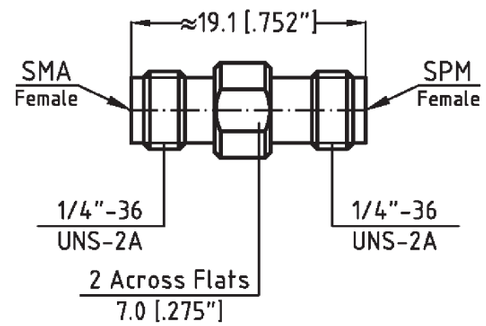

Part - No.	8001-PJ21-02
Connectors	SPM-fem. to SMA-fem.
Frequency	DC - 18.0 GHz
VSWR max.	1.06 + 0.005 x f(GHz)

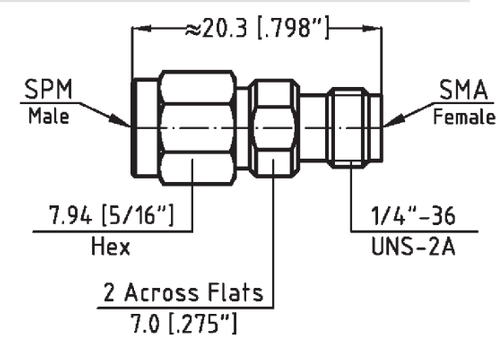

Part - No.	8001-PM21-02
Connectors	SPM-male to SMA-female
Frequency	DC - 18.0 GHz
VSWR max.	1.06 + 0.005 x f(GHz)

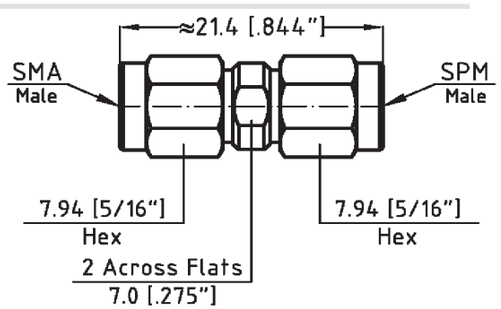

Part - No.	8001-PM11-02
Connectors	SPM-male to SMA-male
Frequency	DC - 18.0 GHz
VSWR max.	1.06 + 0.005 x f(GHz)

W

Part - No.	8001-S008-02
Connectors	SPM-fem. to SMA-fem.
Frequency	DC - 18.0 GHz
VSWR max.	1.06 + 0.007 x f(GHz)

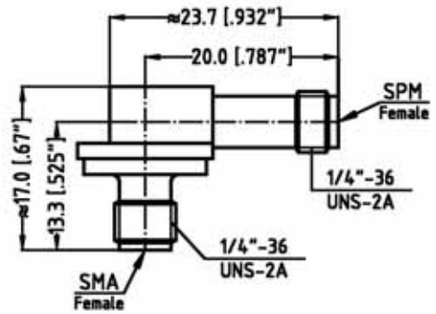

Part - No.	8001-S010-02
Connectors	SPM-fem. to SMA-fem.
Frequency	DC - 18.0 GHz
VSWR max.	1.06 + 0.007 x f(GHz)

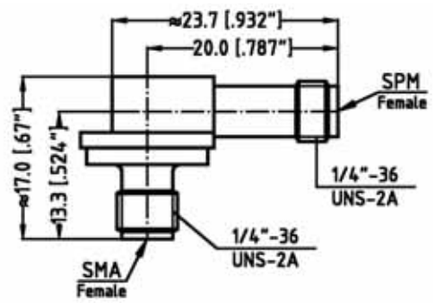

Dimensions shown are Inches over Millimeters or vice versa. Standard units have stainless finish (last 2 digits of the P/N are -02). Interfaces are per DIN 47 223, DIN 47 226, IEC 169-4, IEC 169-7, IEC 169-8, IEC 457-2, IEC 60169-5, IEEE 287, MIL-PRF-39012, MIL DTL-24044, MIL DTL-3643,MIL-STD-348B, where applicable

Spectrum Elektrotechnik GmbH
Germany
www.spectrum-et.com
sales@spectrum-et.com
Phone: +49 / 89 / 35 48 04 0
Fax: +49 / 89 / 35 48 04 90

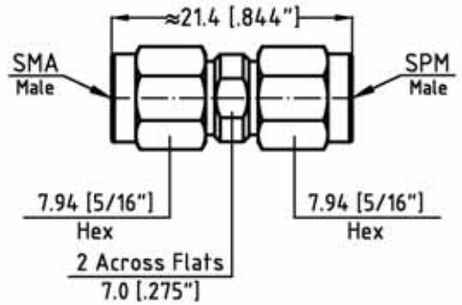

Part - No.	8801-PM11-02
Connectors	SPM-male to SMA-male
Frequency	DC - 18.0 GHz
VSWR max.	1.06 + 0.005 x f(GHz)

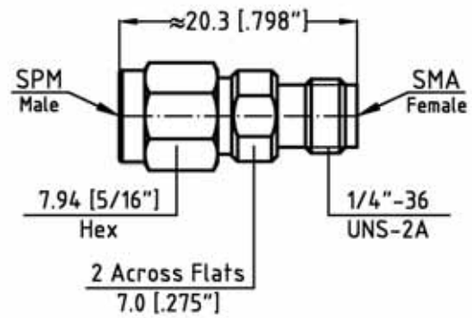

Part - No.	8801-PM21-02
Connectors	SPM-male to SMA-fem.
Frequency	DC - 18.0 GHz
VSWR max.	1.06 + 0.005 x f(GHz)

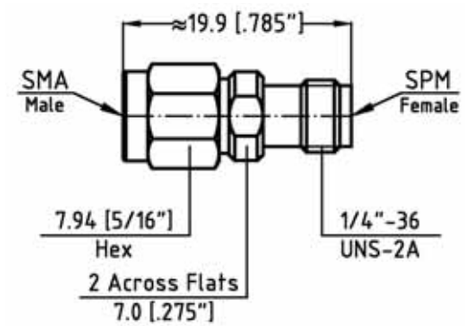

Part - No.	8801-PJ11-02
Connectors	SPM-fem. to SMA-male
Frequency	DC - 18.0 GHz
VSWR max.	1.06 + 0.005 x f(GHz)

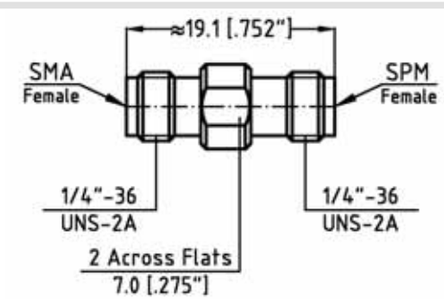

Part - No.	8801-PJ21-02
Connectors	SPM-fem. to SMA-fem.
Frequency	DC - 18.0 GHz
VSWR max.	1.06 + 0.005 x f(GHz)

Dimensions shown are Inches over Millimeters or vice versa. Standard units have stainless finish (last 2 digits of the P/N are -02). Interfaces are per DIN 47 223, DIN 47 226, IEC 169-4, IEC 169-7, IEC 169-8, IEC 457-2, IEC 60169-5, IEEE 287, MIL-PRF-39012, MIL DTL-24044, MIL DTL-3643,MIL-STD-348B, where applicable

Spectrum Elektrotechnik GmbH
Germany
www.spectrum-et.com
sales@spectrum-et.com
Phone: +49 / 89 / 35 48 04 0
Fax: +49 / 89 / 35 48 04 90

W

In-Series and Between-Series Adapters TNC

If your choice of TNC Adapter is not shown in this section, please refer to the Table below to determine other possible locations. Should you not find your adapter listed in any section, please consult the factory or your Spectrum Elektrotechnik Area Representative.

TNC	Section	Page
TNC Overview	X	1
TNC Specifications per MIL-PRF-3901, 11GHz		2
TNCA Specifications per MIL-C-87104/2, 18 GHz		4
TNCA In-Series		6
TNCA In-Series of equal electrical length		18
Between Series TNCA to 2.4mm		20
Between Series TNCA to 3.5mm		21
Between Series TNCA to 3.5mm of equ. el.lengths		23
Between Series TNCA to BNC		24
Between Series TNCA to SMA		25
Between Series TNCA to Custom Design		31
Between Series TNCA to 7mm	E	16
Between Series TNCA to N	K	39
Between Series TNCA to N Hermetically Sealed	EE	10
TNCA In-Series Hermetically Sealed		11
Between Series TNCA to N Push- and Slide-On	DD	22
Between Series TNCA Push-On to N		31
Between Series TNCA Push-On to SMA		34
Between Series TNCA to TNCA Push-& Slide-On		26
Between Series TNC Rev.Sex to N Push- and Slide-On		45
Between Series TNCA to F		48

Although our catalog incorporates a very comprehensive range of products, due to our program of continuous development, there is no way that it will contain every product we manufacture. Please consult the factory for the product you require.
To improve our Standard Products we reserve the right to make changes. Specifications are therefore subject to change without notice.

X

Dimensions shown are Inches over Millimeters or vice versa. Standard units have stainless finish (last 2 digits of the P/N are -02). Interfaces are per DIN 47 223, DIN 47 226, IEC 169-4, IEC 169-7, IEC 169-8, IEC 457-2, IEC 60169-5, IEEE 287, MIL-PRF-39012, MIL DTL-24044, MIL DTL-3643,MIL-STD-348B, where applicable

TNC Specifications to MIL-PRF-39012

The specifications below are general specifications for all TNC connectors. Specific Data for VSWR, Insertion Loss, R.F. leakage, etc., are available from the factory upon request. Specifications in the following table are recommended for any procurement documents or drawings. In the event of any conflict between these specifications and General Specifications MIL-PRF-39012, these specifications shall govern. These specifications are subject to change according to the latest revision.

REQUIREMENT	GENERAL SPECIFICATIONS
Standard Materials	STEEL corrosion resistant 1.4305 per DIN EN 10088; ASTM-A582 (303), or 1.4404 (316L) respectively. ALUMINUM AlMg4.5Mn per DIN DIN EN 1706, AlMgSi0.5 per DIN EN 1706, AlMgSi1 per DIN EN 1706 (6061-T6 per QQ-A-225/8). BRASS CuZn39Pb3 per DIN 17660 (QQ-B-626 (ASTM-B124), half hard). COPPER BERYLLIUM 33-25 CuBe2PbH per DIN17666(DIN CEN/TS;DIN SPEC 9700)(QQ-C530). TFE Fluorocarbon per DIN 52900 (ASTM-D-1710) SILICONE RUBBER per DIN ISO 3601)(A-A-59588,Class IIB) Gr. 50 - 75. BORIUM NITRITE Dielectric for high power applications per in-house specification
Finish for COPPER BERYLLIUM STAINLESS STEEL ALUMINUM BRASS VARIOUS	Center Contacts shall be gold plated to a minimum thickness of .00005-inch in accordance with ASTM-B-488, Type III, Code C, Class 1.25 shall be passivated per ASTM-A967 Conductive Parts shall have an iridited finish per MIL-DTL-5541 Other parts, such as Coupling Nuts and Back-Bodies shall be anodized per MIL-A-8625. .00003 inch (0.8 µm) min. gold plating per MIL-DTL-45204, or nickel plating per QQ-N-290, as specified. Imoloy .0001 inch (2.5 µm) min. plating, consisting of 55% Copper / 20% Zinc / 25% Tin (on special request).
Design	The design shall be such that the outline dimensions in this catalog are met. In addition, the assembled connector shall meet the interface dimensions.
ELECTRICAL	
Frequency Range	DC - 11.0 GHz min.
Insulation Resistance	The insulation resistance shall not be less than 5,000 megohms.
Voltage Standing Wave Ratio (VSWR)	1.03 + .005 * f (GHz)
Contact Resistance	The center contact resistance drop shall not exceed 1.5 milliohms and the outer contact resistance drop shall not exceed 2.0 milliohms.
Dielectric Withstanding Voltage	The magnitude of the test voltage shall be 1,500 volts rms at sea level.
RF High Potential	The high potential test voltage is 1,000 volts rms.
Withstanding Voltage	Leakage is not applicable.
RF Leakage	- 60 dB min. (at 2 - 3 GHz)
Insertion Loss	(.06 SQT(f(GHz))) dB
MECHANICAL	
Connector Durability	The connector is to be tested and its mating connector shall be subjected to 500 insertion and withdrawal cycles at 12 cycles per minute max. The connector shall show no evidence of mechanical failure and the connector shall meet the mating characteristic requirements.
Cable Retention Force	40 pounds (177.9 N) min.
Coupling Nut Retention Force	Not applicable for Female connectors. For male connectors, the axial force is 100 lbs (445 N) max.. The torque is 30 inch-pounds (3.4 Nm) max.
Force to Engage and Disengage	The torque required to engage and disengage shall not exceed 2-4 inch-pounds (0.452-0.678 Nm).
Longitudinal Force max.	Longitudinal force is not applicable.
Mating Characteristics	See interface dimensions shown on next page. Applicable to Females only: oversize pin .057 inch (1.44 mm) max. dia. pin; .125 inch (3.17 mm) deep; insertion force 2 lbs. (8.9 N) max. with. 054 inch (1.37 mm) min. dia. pin; withdrawal force 2.00 oz (.556 N) min. with .052 inch (1.32 mm) max. dia. pin.
Recommended Mating Torque	4 - 6 inch-pounds (0.51- 0.67 Nm)
ENVIRONMENTAL	
Corrosion (Salt Spray)	Specification MIL-STD-202, Method 101, Test Condition B. The salt solution shall be 5%.
Vibration	Specification MIL-STD-202, Method 204, Test Condition B.
Shock	Specification MIL-STD-202, Method 213, Test Condition I.
Thermal Shock	Specification MIL-STD-202, Method 107, Test Condition B, except high temperature shall be + 200°C.
Moisture Resistance	Specification MIL-STD-202, Method 106. Step 7b (vibration) shall be omitted. Insulation resistance shall be 200 megohms min. within 5 minutes of removal from humidity.
Corona Level	The connector shall not exhibit breakdown (corona) when the applied voltage is 375 volts rms and the altitude is 0 feet.

Dimensions shown are Inches over Millimeters or vice versa. Standard units have stainless finish (last 2 digits of the P/N are -02). Interfaces are per DIN 47 223, DIN 47 226, IEC 169-4, IEC 169-7, IEC 169-8, IEC 457-2, IEC 60169-5, IEEE 287, MIL-PRF-39012, MIL DTL-24044, MIL DTL-3643,MIL-STD-348B, where applicable

Spectrum Elektrotechnik GmbH
Germany
www.spectrum-et.com
sales@spectrum-et.com
Phone: +49 / 89 / 35 48 04 0
Fax: +49 / 89 / 35 48 04 90

Interface Mating Dimensions TNC (Per MIL-STD-348B)

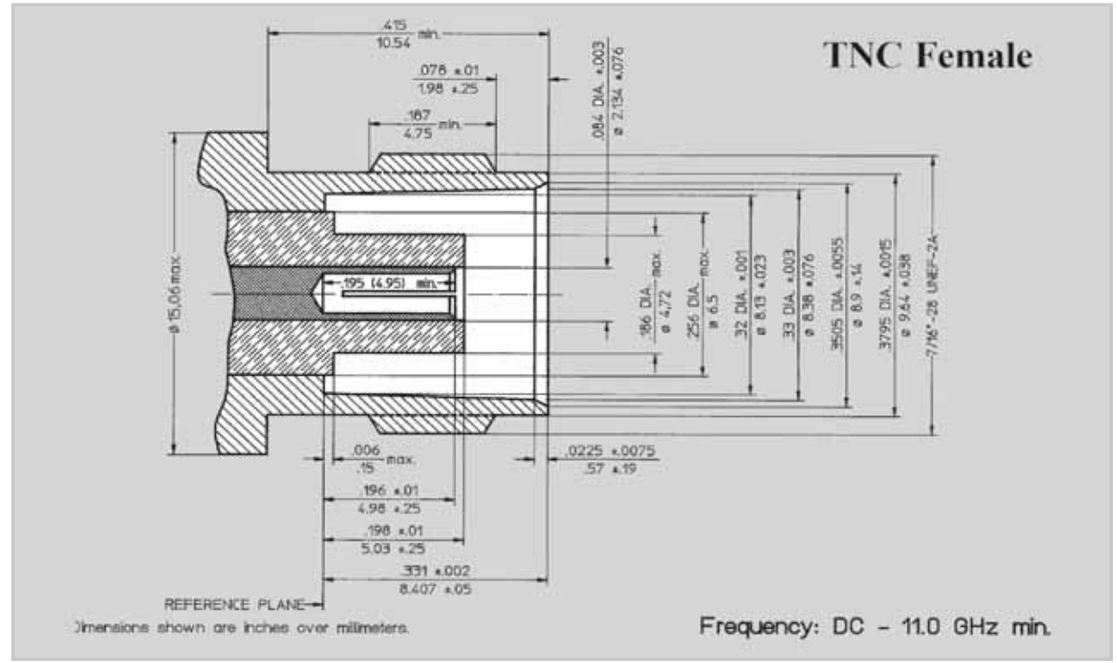

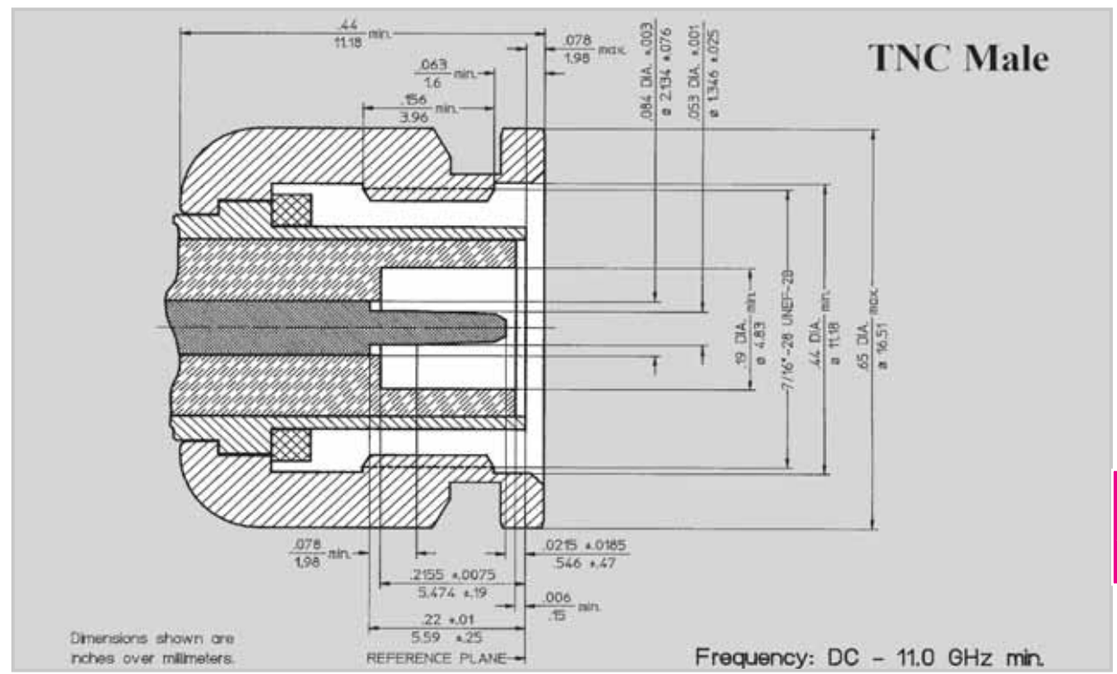

Dimensions shown are Inches over Millimeters or vice versa. Standard units have stainless finish (last 2 digits of the P/N are -02). Interfaces are per DIN 47 223, DIN 47 226, IEC 169-4, IEC 169-7, IEC 169-8, IEC 457-2, IEC 60169-5, IEEE 287, MIL-PRF-39012, MIL DTL-24044, MIL DTL-3643,MIL-STD-348B, where applicable

Spectrum Elektrotechnik GmbH
Germany
www.spectrum-et.com
sales@spectrum-et.com
Phone: +49 / 89 / 35 48 04 0
Fax: +49 / 89 / 35 48 04 90

TNCA Specifications to MIL-C-87104/2

The specifications below are general specifications for all TNC connectors. Specific Data for VSWR, Insertion Loss, R.F. leakage, etc., are available from the factory upon request. Specifications in the following table are recommended for any procurement documents or drawings. In the event of any conflict between these specifications and General Specifications MIL-C-87104/2, these specifications shall govern. These specifications are subject to change according to the latest revision.

REQUIREMENT	GENERAL SPECIFICATIONS
Standard Materials	STEEL corrosion resistant 1.4305 per DIN EN 10088; ASTM-A582 (303), or 1.4404 (316L) respectively. ALUMINUM AlMg4.5Mn per DIN DIN EN 1706, AlMgSi0.5 per DIN EN 1706, AlMgSi1 per DIN EN 1706 (6061-T6 per QQ-A-225/8). BRASS CuZn39Pb3 per DIN 17660 (QQ-B-626 (ASTM-B124), half hard). COPPER BERYLLIUM 33-25 CuBe2PbH per DIN17666(DIN CEN/TS;DIN SPEC 9700)(QQ-C530). TFE Fluorocarbon per DIN 52900 (ASTM-D-1710), or Thermoplast per DIN EN ISO 10350, or PEI per in-house specification respectively for higher temperature applications. SILICONE RUBBER per DIN ISO 3601)(A-A-59588,Class IIB) Gr. 50 - 75. BORIUM NITRITE Dielectric for high power applications per in-house specification
Finish for COPPER BERYLLIUM STAINLESS STEEL ALUMINUM BRASS VARIOUS	Center Contacts shall be gold plated to a minimum thickness of .00005-inch in accordance with ASTM-B-488, Type III, Code C, Class 1.25 shall be passivated per ASTM-A967 Conductive Parts shall have an iridited finish per MIL-DTL-5541 Other parts, such as Coupling Nuts and Back-Bodies shall be anodized per MIL-A-8625. .00003 inch (0.8 µm) min. gold plating per MIL-DTL-45204, or nickel plating per QQ-N-290, as specified. Imoloy .0001 inch (2.5 µm) min. plating, consisting of 55% Copper / 20% Zinc / 25% Tin (on special request).
Design	The design shall be such that the outline dimensions in this catalog are met. In addition, the assembled connector shall meet the interface dimensions.
ELECTRICAL	
Frequency Range	DC - 18.0 GHz min.
Insulation Resistance	The insulation resistance shall not be less than 5,000 megohms.
Voltage Standing Wave Ratio (VSWR)	1.03 + .005 * f (GHz)
Contact Resistance	The center contact resistance drop shall not exceed 1.5 milliohms and the outer contact resistance drop shall not exceed 2.0 milliohms.
Dielectric Withstanding Voltage	The magnitude of the test voltage shall be 1,500 volts rms at sea level.
RF High Potential Withstanding Voltage	The high potential test voltage is 2,000 volts rms.
RF Leakage	Leakage is not applicable.
Insertion Loss	- 60 dB min. (at 2 - 3 GHz) 0.22 dB at 18GHz
MECHANICAL	
Connector Durability	The connector is to be tested and its mating connector shall be subjected to 500 insertion and withdrawal cycles at 12 cycles per minute max. The connector shall show no evidence of mechanical failure and the connector shall meet the mating characteristic requirements.
Cable Retention Force	40 pounds (177.9 N) min.
Coupling Nut Retention Force	Not applicable for Female connectors. For male connectors, the axial force is 100 lbs (445 N) max.. The torque is 30 inch-pounds (3.4 Nm) max.
Force to Engage and Disengage	The torque required to engage and disengage shall not exceed 2-4 inch-pounds (0.452-0.678 Nm).
Longitudinal Force max.	Longitudinal force is not applicable.
Mating Characteristics	See interface dimensions shown on next page. Applicable to Females only: oversize pin .057 inch (1.44 mm) max. dia. pin; .125 inch (3.17 mm) deep; insertion force 2 lbs. (8.9 N) max. with. 054 inch (1.37 mm) min. dia. pin; withdrawal force 2.00 oz (.556 N) min. with .052 inch (1.32 mm) max. dia. pin.
Recommended Mating Torque	inch-pounds (2.9 Nm)
ENVIRONMENTAL	
Corrosion (Salt Spray)	Specification MIL-STD-202, Method 101, Test Condition B. The salt solution shall be 5%.
Vibration	Specification MIL-STD-202, Method 204, Test Condition B.
Shock	Specification MIL-STD-202, Method 213, Test Condition I.
Thermal Shock	Specification MIL-STD-202, Method 107, Test Condition B, except high temperature shall be +70°C when the regular Bead is used, +170° when the high temperature Bead is used, and +200°C when TFE Fluorocarbon or Borium Nitrite Dielectric are used.
Moisture Resistance	Specification MIL-STD-202, Method 106. Step 7b (vibration) shall be omitted. Insulation resistance shall be 200 megohms min. within 5 minutes of removal from humidity.
Corona Level	The connector shall not exhibit breakdown (corona) when the applied voltage is 375 volts rms and the altitude is 0 feet.

Dimensions shown are Inches over Millimeters or vice versa. Standard units have stainless finish (last 2 digits of the P/N are -02). Interfaces are per DIN 47 223, DIN 47 226, IEC 169-4, IEC 169-7, IEC 169-8, IEC 457-2, IEC 60169-5, IEEE 287, MIL-PRF-39012, MIL DTL-24044, MIL DTL-3643,MIL-STD-348B, where applicable

Spectrum Elektrotechnik GmbH
Germany
www.spectrum-et.com
sales@spectrum-et.com
Phone: +49 / 89 / 35 48 04 0
Fax: +49 / 89 / 35 48 04 90

Interface Mating Dimensions TNCA (Per MIL-STD-348B)

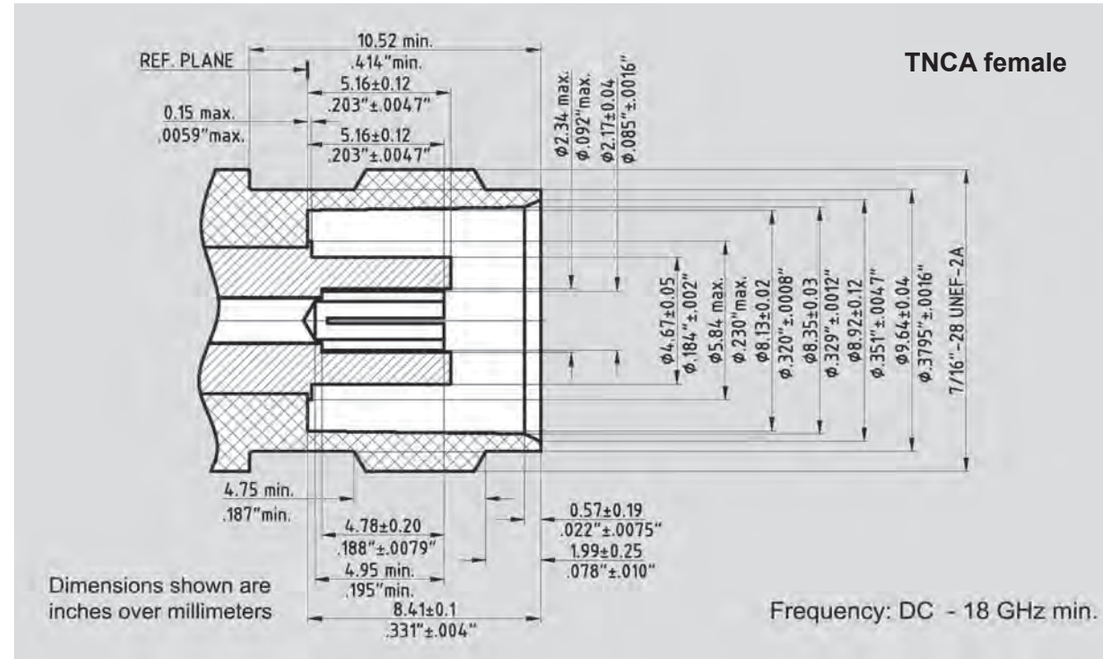

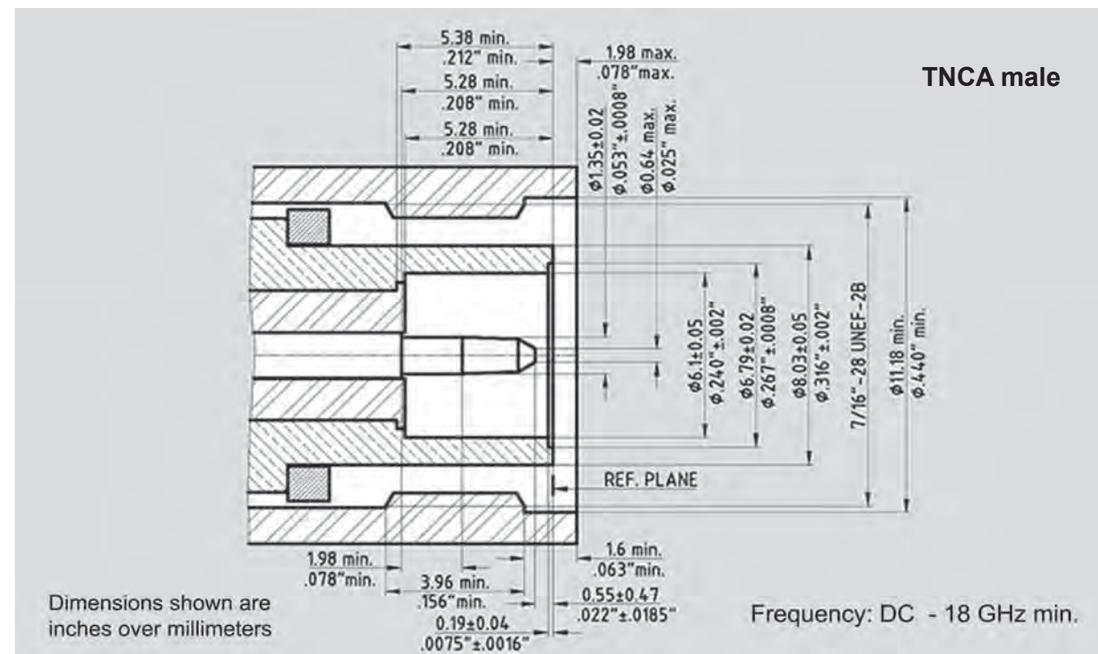

Dimensions shown are Inches over Millimeters or vice versa. Standard units have stainless finish (last 2 digits of the P/N are -02). Interfaces are per DIN 47 223, DIN 47 226, IEC 169-4, IEC 169-7, IEC 169-8, IEC 457-2, IEC 60169-5, IEEE 287, MIL-PRF-39012, MIL DTL-24044, MIL DTL-3643,MIL-STD-348B, where applicable

Spectrum Elektrotechnik GmbH
Germany
www.spectrum-et.com
sales@spectrum-et.com
Phone: +49 / 89 / 35 48 04 0
Fax: +49 / 89 / 35 48 04 90

Part - No.	8001-4141-02
Connectors	TNCA-fem. to TNCA-fem.
Frequency	DC - 18.0 GHz
VSWR max.	1.03 + 0.005 x f(GHz)

8U01-4141-02 for higher temp. applications

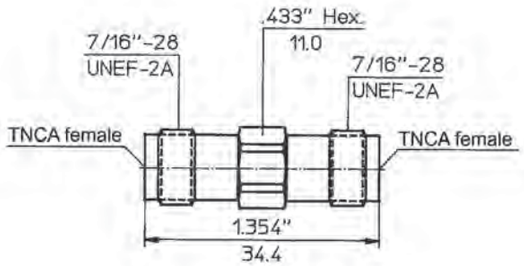

Part - No.	8002-4141-02
Connectors	TNCA-fem. to TNCA-fem.
Frequency	DC - 18.0 GHz
VSWR max.	1.03 + 0.005 x f(GHz)

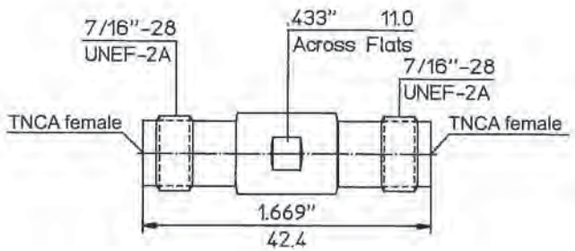

Part - No.	8003-4141-02
Connectors	TNCA-fem. to TNCA-fem.
Frequency	DC - 18.0 GHz
VSWR max.	1.03 + 0.005 x f(GHz)

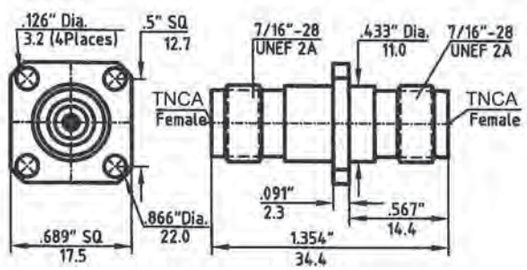

Part - No.	8U03-4141-02
Connectors	TNCA-fem. to TNCA-fem.
Frequency	DC - 18.0 GHz
VSWR max.	1.03 + 0.005 x f(GHz)

Higher temperature application

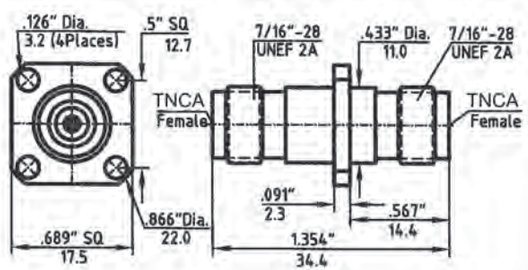

Dimensions shown are Inches over Millimeters or vice versa. Standard units have stainless finish (last 2 digits of the P/N are -02). Interfaces are per DIN 47 223, DIN 47 226, IEC 169-4, IEC 169-7, IEC 169-8, IEC 457-2, IEC 60169-5, IEEE 287, MIL-PRF-39012, MIL DTL-24044, MIL DTL-3643,MIL-STD-348B, where applicable

Spectrum Elektrotechnik GmbH
Germany
www.spectrum-et.com
sales@spectrum-et.com
Phone: +49 / 89 / 35 48 04 0
Fax: +49 / 89 / 35 48 04 90

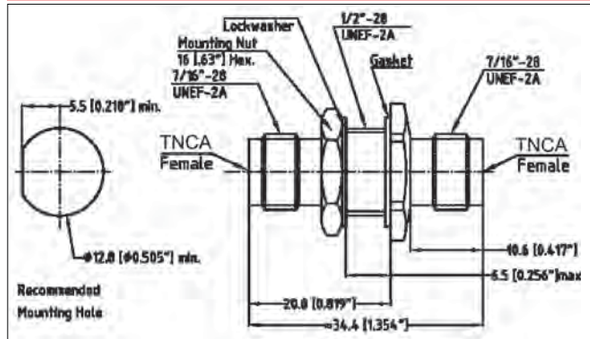

Part - No.	8004-4141-02
Connectors	TNCA-fem. to TNCA-fem.
Frequency	DC - 18.0 GHz
VSWR max.	1.03 + 0.005 x f(GHz)

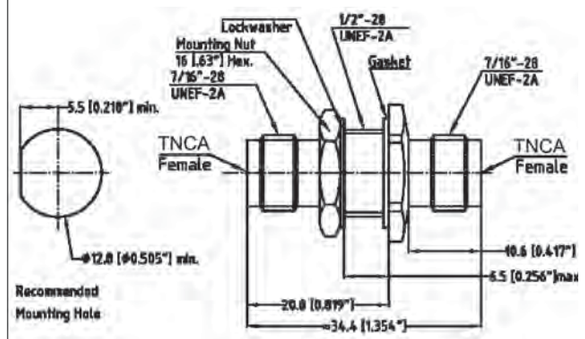

Part - No.	8U04-4141-02
Connectors	TNCA-fem. to TNCA-fem.
Frequency	DC - 18.0 GHz
VSWR max.	1.03 + 0.005 x f(GHz)

Higher temperature application

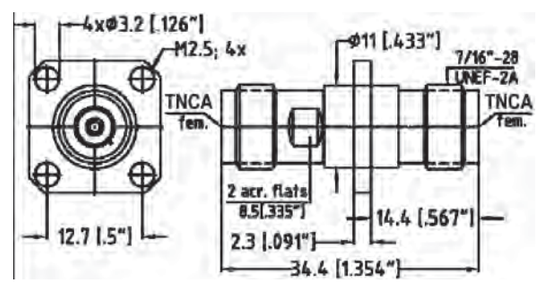

Part - No.	8005-4141-02
Connectors	TNCA-fem. to TNCA-fem.
Frequency	DC - 18.0 GHz
VSWR max.	1.03 + 0.005 x f(GHz)

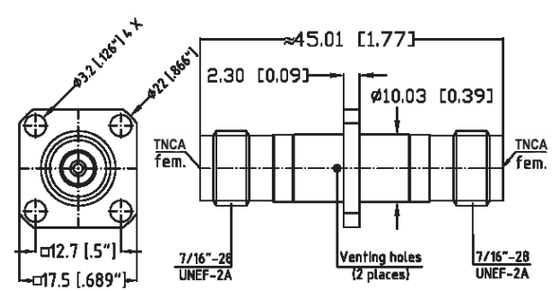

Part - No.	805V-4041-03
Connectors	TNCA-fem. to TNCA-fem.
Frequency	DC - 18.0 GHz
VSWR max.	1.03 + 0.005 x f(GHz)

Unit has venting holes

Dimensions shown are Inches over Millimeters or vice versa. Standard units have stainless finish (last 2 digits of the P/N are -02). Interfaces are per DIN 47 223, DIN 47 226, IEC 169-4, IEC 169-7, IEC 169-8, IEC 457-2, IEC 60169-5, IEEE 287, MIL-PRF-39012, MIL DTL-24044, MIL DTL-3643,MIL-STD-348B, where applicable

Spectrum Elektrotechnik GmbH
Germany
www.spectrum-et.com
sales@spectrum-et.com
Phone: +49 / 89 / 35 48 04 0
Fax: +49 / 89 / 35 48 04 90

Part - No.	805V-4141-00
Connectors	TNC-fem. to TNC-fem.
Frequency	DC - 13.0 GHz
VSWR max.	1.03 + 0.005 x f(GHz)

Body is from Stainless Steel gold plated
Unit has venting holes
Higher power applications

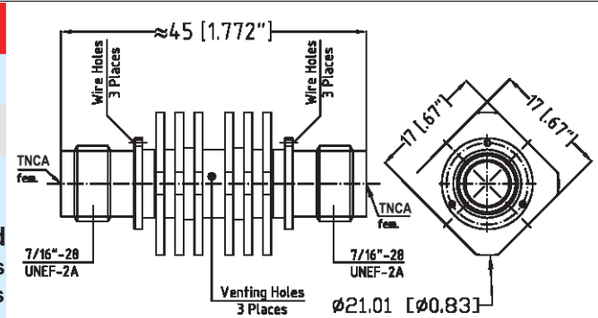

Part - No.	805V-4141-29
Connectors	TNC-fem. to TNC-fem.
Frequency	DC - 13.0 GHz
VSWR max.	1.03 + 0.005 x f(GHz)

Body is from Brass gold plated
Higher power applications

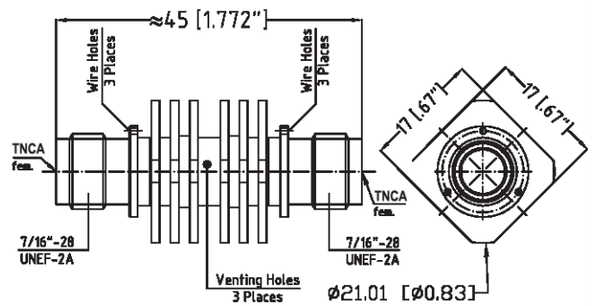

Part - No.	8091-4141-02
Connectors	TNCA-fem. to TNCA-fem.
Frequency	DC - 18.0 GHz
VSWR max.	1.06 + 0.005 x f(GHz)

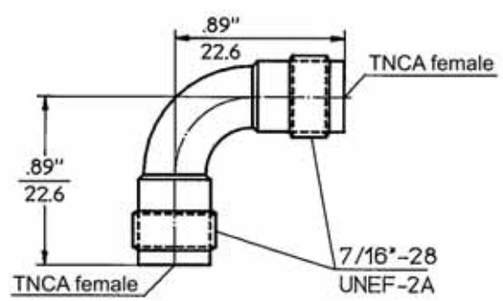

Part - No.	8190-4141-02
Connectors	TNCA-fem. to TNCA-fem.
Frequency	DC - 18.0 GHz
VSWR max.	1.06 + 0.005 x f(GHz)

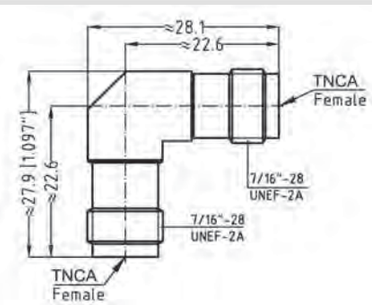

Dimensions shown are Inches over Millimeters or vice versa. Standard units have stainless finish (last 2 digits of the P/N are -02). Interfaces are per DIN 47 223, DIN 47 226, IEC 169-4, IEC 169-7, IEC 169-8, IEC 457-2, IEC 60169-5, IEEE 287, MIL-PRF-39012, MIL DTL-24044, MIL DTL-3643,MIL-STD-348B, where applicable

Spectrum Elektrotechnik GmbH
Germany
www.spectrum-et.com
sales@spectrum-et.com
Phone: +49 / 89 / 35 48 04 0
Fax: +49 / 89 / 35 48 04 90

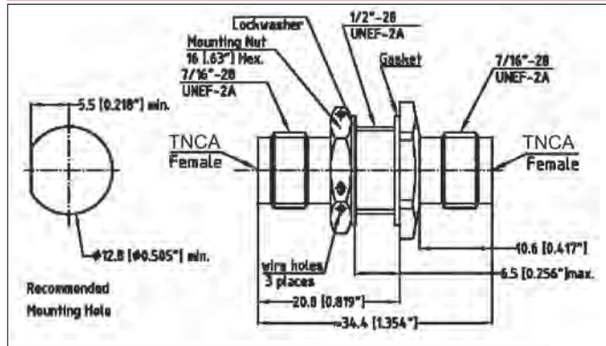

Part - No.	8006-4141-02
Connectors	TNCA-fem. to TNCA-fem.
Frequency	DC - 18.0 GHz
VSWR max.	1.03 + 0.005 x f(GHz)

Wire Holes in Mounting Nut

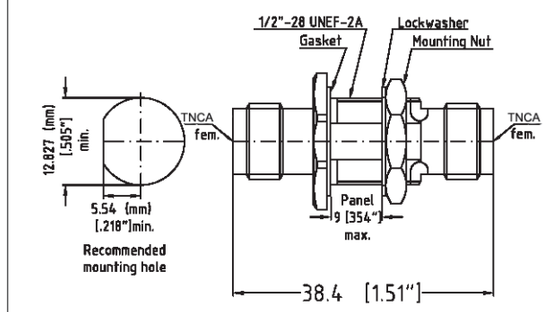

Part - No.	801P-4141-02
Connectors	TNCA-fem. to TNCA-fem.
Frequency	DC - 18.0 GHz
VSWR max.	1.03 + 0.005 x f(GHz)

No Wire Holes

Pressure tight

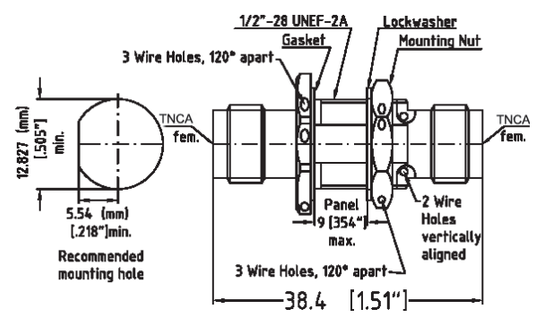

Part - No.	802P-4141-02
Connectors	TNCA-fem. to TNCA-fem.
Frequency	DC - 18.0 GHz
VSWR max.	1.03 + 0.005 x f(GHz)

Wire Holes in Flange, Body and in the Mounting Nut
Pressure tight

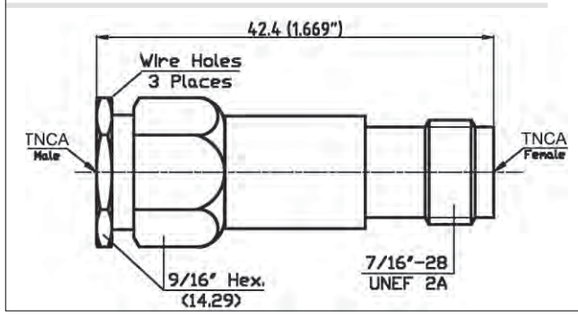

Part - No.	8001-S003-02
Connectors	TNCA-fem. to TNCA-male
Frequency	DC - 18.0 GHz
VSWR max.	1.03 + 0.005 x f(GHz)

Dimensions shown are Inches over Millimeters or vice versa. Standard units have stainless finish (last 2 digits of the P/N are -02). Interfaces are per DIN 47 223, DIN 47 226, IEC 169-4, IEC 169-7, IEC 169-8, IEC 457-2, IEC 60169-5, IEEE 287, MIL-PRF-39012, MIL DTL-24044, MIL DTL-3643,MIL-STD-348B, where applicable

Spectrum Elektrotechnik GmbH
Germany
www.spectrum-et.com
sales@spectrum-et.com
Phone: +49 / 89 / 35 48 04 0
Fax: +49 / 89 / 35 48 04 90

Part - No.	8001-3141-02
Connectors	TNCA-fem. to TNCA-male
Frequency	DC - 18.0 GHz
VSWR max.	1.03 + 0.005 x f(GHz)

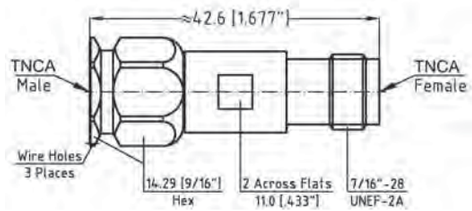

Part - No.	8U01-3141-02
Connectors	TNCA-fem. to TNCA-male
Frequency	DC - 18.0 GHz
VSWR max.	1.03 + 0.005 x f(GHz)

Higher temperature application

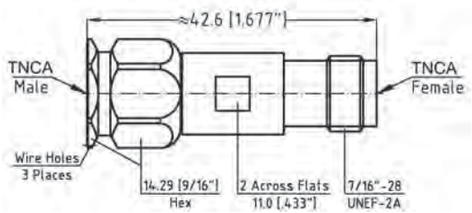

Part - No.	8002-3141-02
Connectors	TNCA-fem. to TNCA-male
Frequency	DC - 18.0 GHz
VSWR max.	1.03 + 0.005 x f(GHz)

8U02-3141-02 for higher temp. application

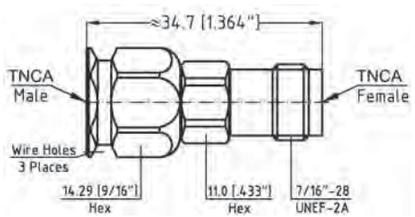

Part - No.	8003-3141-02
Connectors	TNCA-fem. to TNCA-male
Frequency	DC - 18.0 GHz
VSWR max.	1.03 + 0.005 x f(GHz)

TNCmale to TNC BFJ

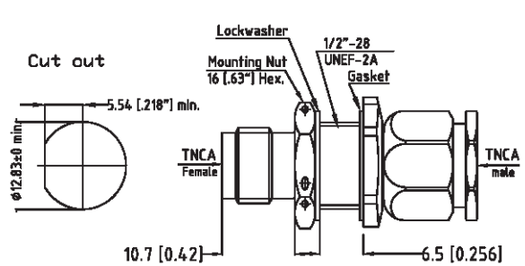

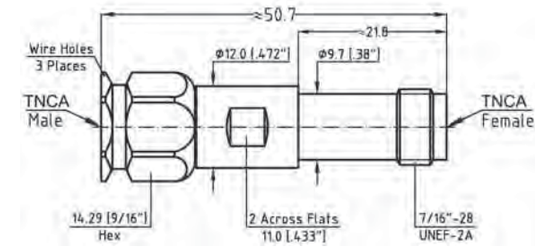

Part - No.	8004-3141-02
Connectors	TNCA-fem. to TNCA-male
Frequency	DC - 18.0 GHz
VSWR max.	1.03 + 0.005 x f(GHz)

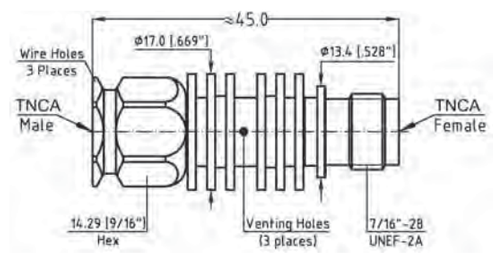

Part - No.	805V-3141-00
Connectors	TNC-fem. to TNC-male
Frequency	DC - 13.0 GHz
VSWR max.	1.03 + 0.005 x f(GHz)

Unit has venting holes
Body is from Brass gold plated
Higher power applications

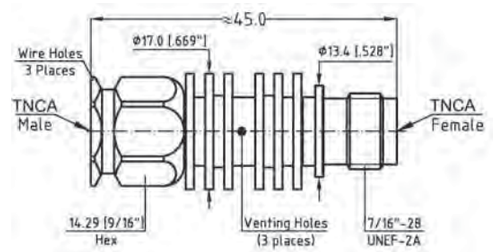

Part - No.	8V51-3141-00
Connectors	TNC-fem. to TNC-male
Frequency	DC - 13.0 GHz
VSWR max.	1.03 + 0.005 x f(GHz)

Unit has venting holes
Body is from Brass gold plated
Higher power applications

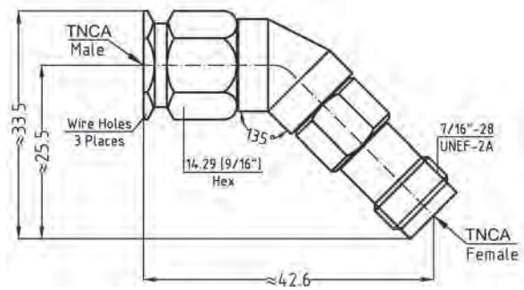

Part - No.	8045-3141-02
Connectors	TNCA-fem. to TNCA-male
Frequency	DC - 18.0 GHz
VSWR max.	1.03 + 0.007 x f(GHz)

Part - No.	8090-3141-02
Connectors	TNCA-fem. to TNCA-male
Frequency	DC - 18.0 GHz
VSWR max.	1.06 + 0.005 x f(GHz)

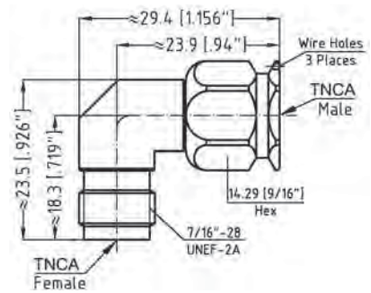

Part - No.	8290-3141-02
Connectors	TNCA-fem. to TNCA-male
Frequency	DC - 18.0 GHz
VSWR max.	1.06 + 0.005 x f(GHz)

Difference is the coupling nut

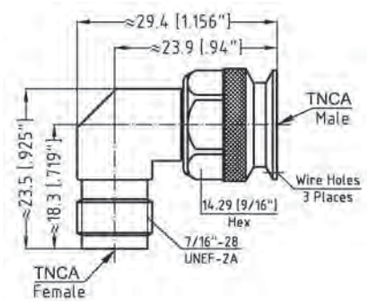

Part - No.	8190-3141-02
Connectors	TNCA-fem. to TNCA-male
Frequency	DC - 18.0 GHz
VSWR max.	1.06 + 0.005 x f(GHz)

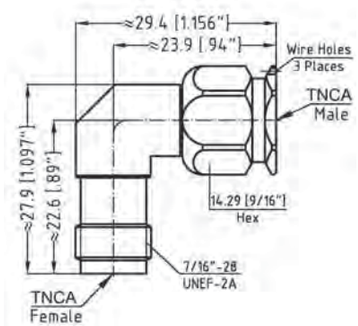

Part - No.	8092-3141-02
Connectors	TNCA-fem. to TNCA-male
Frequency	DC - 18.0 GHz
VSWR max.	1.06 + 0.005 x f(GHz)

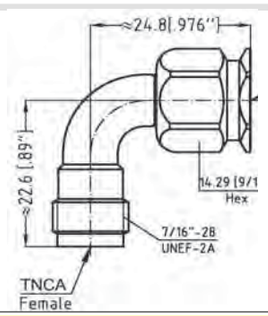

Dimensions shown are Inches over Millimeters or vice versa. Standard units have stainless finish (last 2 digits of the P/N are -02). Interfaces are per DIN 47 223, DIN 47 226, IEC 169-4, IEC 169-7, IEC 169-8, IEC 457-2, IEC 60169-5, IEEE 287, MIL-PRF-39012, MIL DTL-24044, MIL DTL-3643,MIL-STD-348B, where applicable

Spectrum Elektrotechnik GmbH
Germany
www.spectrum-et.com
sales@spectrum-et.com
Phone: +49 / 89 / 35 48 04 0
Fax: +49 / 89 / 35 48 04 90

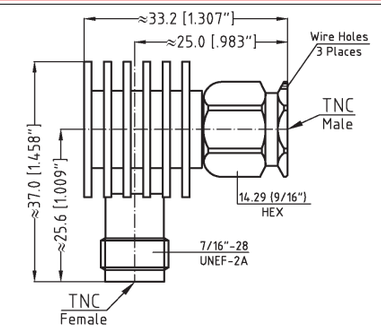

Part - No.	8095-3141-02
Connectors	TNC-fem. to TNC-male
Frequency	DC - 10.0 GHz
VSWR max.	1.06 + 0.005 x f(GHz)

Outer Conductor is stainless steel gold plated, coupling nut is stainless steel passivated.

Higher power applications

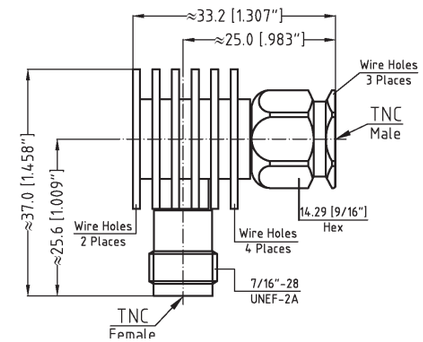

Part - No.	809V-3141-02
Connectors	TNC-fem. to TNC-male
Frequency	DC - 10.0 GHz
VSWR max.	1.06 + 0.005 x f(GHz)

Unit has venting holes

Outer Conductor is stainless steel gold plated, coupling nut is stainless steel passivated.

Higher power applications

Dimensions shown are Inches over Millimeters or vice versa. Standard units have stainless finish (last 2 digits of the P/N are -02). Interfaces are per DIN 47 223, DIN 47 226, IEC 169-4, IEC 169-7, IEC 169-8, IEC 457-2, IEC 60169-5, IEEE 287, MIL-PRF-39012, MIL DTL-24044, MIL DTL-3643,MIL-STD-348B, where applicable

Spectrum Elektrotechnik GmbH
Germany
www.spectrum-et.com
sales@spectrum-et.com
Phone: +49 / 89 / 35 48 04 0
Fax: +49 / 89 / 35 48 04 90

Part - No.	8S90-3141-02
Connectors	TNCA-fem. to TNCA-male
Frequency	DC - 18.0 GHz
VSWR max.	1.06 + 0.005 x f(GHz)

Higher power applications

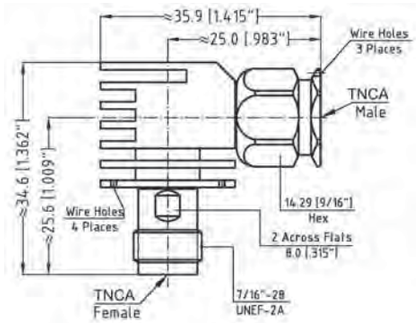

Part - No.	8091-3141-02
Connectors	TNCA-fem. to TNCA-male
Frequency	DC - 18.0 GHz
VSWR max.	1.06 + 0.005 x f(GHz)

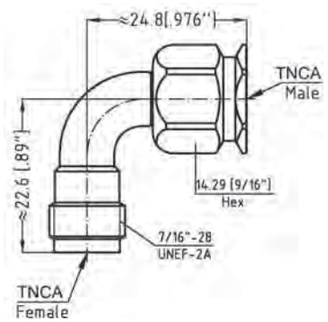

Part - No.	8091-S002-02
Connectors	TNCA-fem. to TNCA-m mod
Frequency	DC - 18.0 GHz
VSWR max.	1.06 + 0.005 x f(GHz)

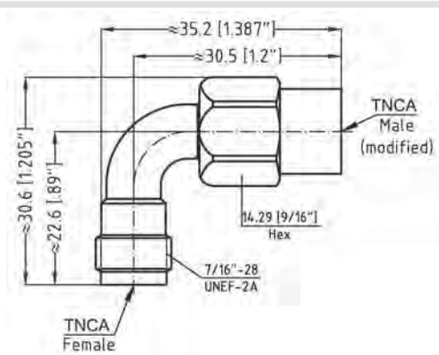

Part - No.	8059-3141-02
Connectors	TNCA-fem. to TNCA-male
Frequency	DC - 18.0 GHz
VSWR max.	1.06 + 0.005 x f(GHz)

Higher power applications

Panel mount

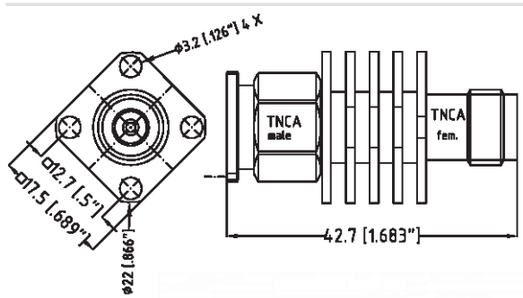

Dimensions shown are Inches over Millimeters or vice versa. Standard units have stainless finish (last 2 digits of the P/N are -02). Interfaces are per DIN 47 223, DIN 47 226, IEC 169-4, IEC 169-7, IEC 169-8, IEC 457-2, IEC 60169-5, IEEE 287, MIL-PRF-39012, MIL DTL-24044, MIL DTL-3643,MIL-STD-348B, where applicable

Spectrum Elektrotechnik GmbH
Germany
www.spectrum-et.com
sales@spectrum-et.com
Phone: +49 / 89 / 35 48 04 0
Fax: +49 / 89 / 35 48 04 90

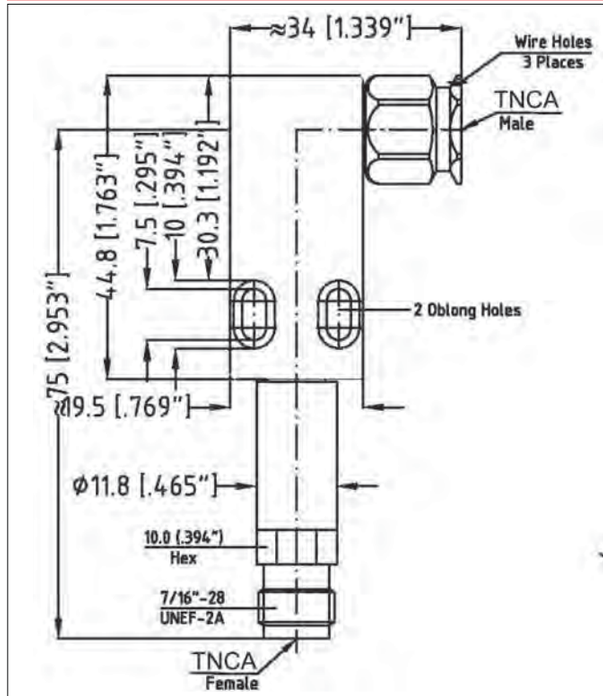

Part - No.	8005-3141-S1
Connectors	TNCA-fem. to TNCA-male
Frequency	DC - 18.0 GHz
VSWR max.	1.06 + 0.005 x f(GHz)

Dimensions shown are Inches over Millimeters or vice versa. Standard units have stainless finish (last 2 digits of the P/N are -02). Interfaces are per DIN 47 223, DIN 47 226, IEC 169-4, IEC 169-7, IEC 169-8, IEC 457-2, IEC 60169-5, IEEE 287, MIL-PRF-39012, MIL DTL-24044, MIL DTL-3643,MIL-STD-348B, where applicable

Spectrum Elektrotechnik GmbH
Germany
www.spectrum-et.com
sales@spectrum-et.com
Phone: +49 / 89 / 35 48 04 0
Fax: +49 / 89 / 35 48 04 90

Part - No.	8001-3131-02
Connectors	TNCA-male to TNCA-male
Frequency	DC - 18.0 GHz
VSWR max.	1.03 + 0.005 x f(GHz)

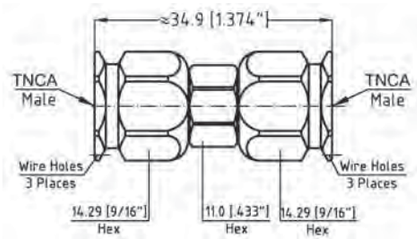

Part - No.	8H01-3131-02
Connectors	TNCA-male to TNCA-male
Frequency	DC - 18.0 GHz
VSWR max.	1.03 + 0.005 x f(GHz)

Higher temperature application

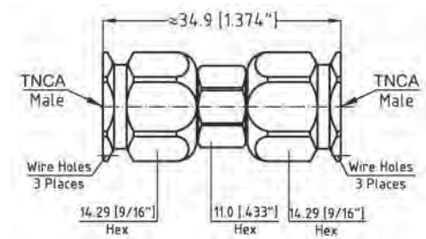

Part - No.	8050-3131-02
Connectors	TNC-male to TNC-male
Frequency	DC - 13.0 GHz
VSWR max.	1.03 + 0.005 x f(GHz)

Higher power applications

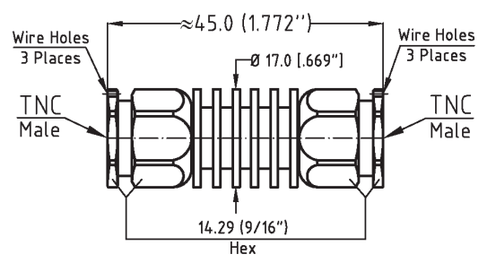

Part - No.	805V-3131-00
Connectors	TNC-male to TNC-male
Frequency	DC - 13.0 GHz
VSWR max.	1.03 + 0.005 x f(GHz)

Unit has venting holes
Higher power applications

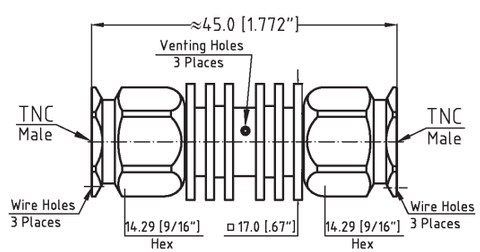

X

Dimensions shown are Inches over Millimeters or vice versa. Standard units have stainless finish (last 2 digits of the P/N are -02). Interfaces are per DIN 47 223, DIN 47 226, IEC 169-4, IEC 169-7, IEC 169-8, IEC 457-2, IEC 60169-5, IEEE 287, MIL-PRF-39012, MIL DTL-24044, MIL DTL-3643,MIL-STD-348B, where applicable

Spectrum Elektrotechnik GmbH
Germany
www.spectrum-et.com
sales@spectrum-et.com
Phone: +49 / 89 / 35 48 04 0
Fax: +49 / 89 / 35 48 04 90

In-Series Adapters to Type TNCA male/male

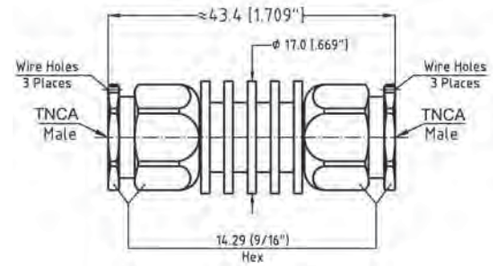

Part - No.	885A-3131-02
Connectors	TNCA-male to TNCA-male
Frequency	DC - 18.0 GHz
VSWR max.	1.03 + 0.005 x f(GHz)

885A-3131-00 is stainless steel gold plated
Higher power applications

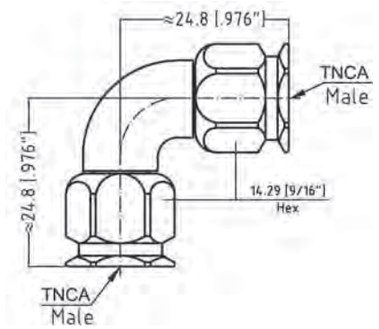

Part - No.	8091-3131-02
Connectors	TNCA-male to TNCA-male
Frequency	DC - 18.0 GHz
VSWR max.	1.06 + 0.005 x f(GHz)

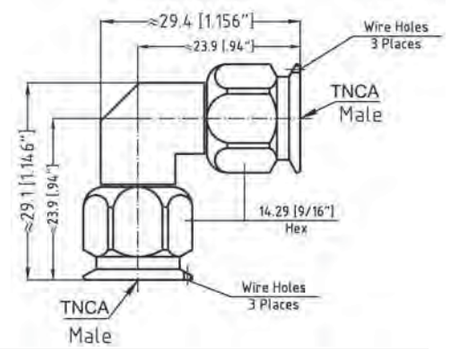

Part - No.	8190-3131-02
Connectors	TNCA-male to TNCA-male
Frequency	DC - 18.0 GHz
VSWR max.	1.06 + 0.005 x f(GHz)

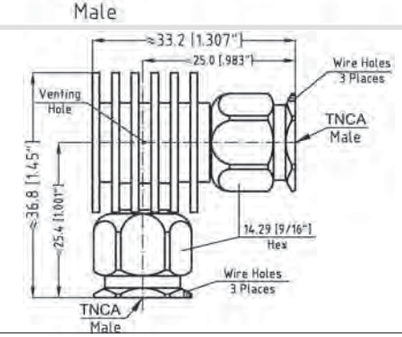

Part - No.	809V-3131-02
Connectors	TNC-male to TNC-male
Frequency	DC - 10.0 GHz
VSWR max.	1.03 + 0.005 x f(GHz)

Higher power applications

X

Dimensions shown are Inches over Millimeters or vice versa. Standard units have stainless finish (last 2 digits of the P/N are -02). Interfaces are per DIN 47 223, DIN 47 226, IEC 169-4, IEC 169-7, IEC 169-8, IEC 457-2, IEC 60169-5, IEEE 287, MIL-PRF-39012, MIL DTL-24044, MIL DTL-3643,MIL-STD-348B, where applicable

Spectrum Elektrotechnik GmbH
Germany
www.spectrum-et.com
sales@spectrum-et.com
Phone: +49 / 89 / 35 48 04 0
Fax: +49 / 89 / 35 48 04 90

Part - No.	8801-4141-02
Connectors	TNCA-fem. to TNCA-fem.
Frequency	DC - 18.0 GHz
VSWR max.	1.03 + 0.005 x f(GHz)

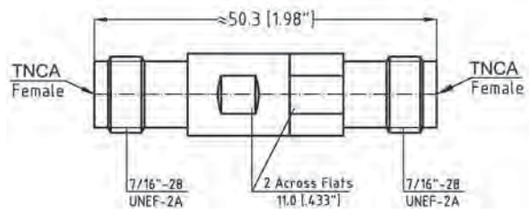

Part - No.	8801-3141-02
Connectors	TNCA-fem. to TNCA-male
Frequency	DC - 18.0 GHz
VSWR max.	1.03 + 0.005 x f(GHz)

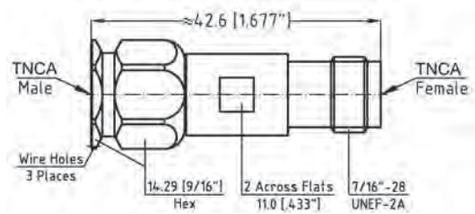

Part - No.	8801-3131-02
Connectors	TNCA-male to TNCA-male
Frequency	DC - 18.0 GHz
VSWR max.	1.03 + 0.005 x f(GHz)

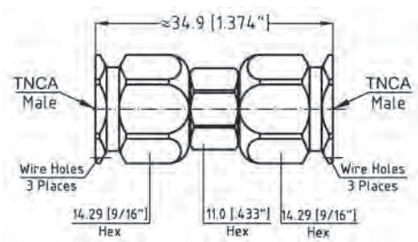

The Adapters
8801-4141-02
8801-3141-02
8801-3131-02 have equal electrical lengths

Dimensions shown are Inches over Millimeters or vice versa. Standard units have stainless finish (last 2 digits of the P/N are -02). Interfaces are per DIN 47 223, DIN 47 226, IEC 169-4, IEC 169-7, IEC 169-8, IEC 457-2, IEC 60169-5, IEEE 287, MIL-PRF-39012, MIL DTL-24044, MIL DTL-3643,MIL-STD-348B, where applicable

Spectrum Elektrotechnik GmbH
Germany
www.spectrum-et.com
sales@spectrum-et.com
Phone: +49 / 89 / 35 48 04 0
Fax: +49 / 89 / 35 48 04 90

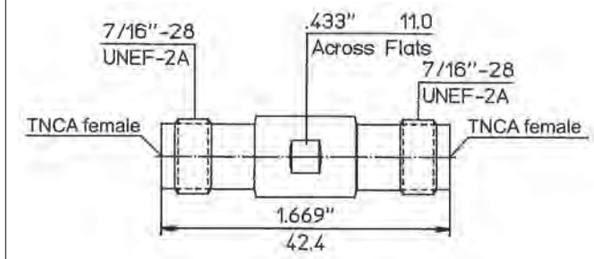

Part - No.	8802-4141-02
Connectors	TNCA-fem. to TNCA-fem.
Frequency	DC - 18.0 GHz
VSWR max.	1.03 + 0.005 x f(GHz)

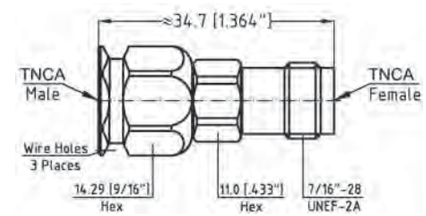

Part - No.	8802-3141-02
Connectors	TNCA-fem. to TNCA-male
Frequency	DC - 18.0 GHz
VSWR max.	1.03 + 0.005 x f(GHz)

The Adapters
8802-4141-02
8802-3141-02 have equal electrical lengths

Although our catalog incorporates a very comprehensive range of products, due to our program of continuous development, there is no way that it will contain every product we manufacture. Please consult the factory for the product you require.

Dimensions shown are Inches over Millimeters or vice versa. Standard units have stainless finish (last 2 digits of the P/N are -02). Interfaces are per DIN 47 223, DIN 47 226, IEC 169-4, IEC 169-7, IEC 169-8, IEC 457-2, IEC 60169-5, IEEE 287, MIL-PRF-39012, MIL DTL-24044, MIL DTL-3643,MIL-STD-348B, where applicable

Spectrum Elektrotechnik GmbH
Germany
www.spectrum-et.com
sales@spectrum-et.com
Phone: +49 / 89 / 35 48 04 0
Fax: +49 / 89 / 35 48 04 90

Part - No.	8001-HM41-S1
Connectors	2.4mm-male to TNCA-fem.
Frequency	DC - 18.0 GHz
VSWR max.	1.03 + 0.005 x f(GHz)

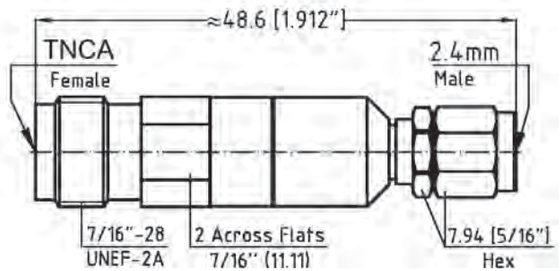

Part - No.	8001-HF31-S1
Connectors	2.4mm- fem. to TNCA-male
Frequency	DC - 18.0 GHz
VSWR max.	1.03 + 0.005 x f(GHz)

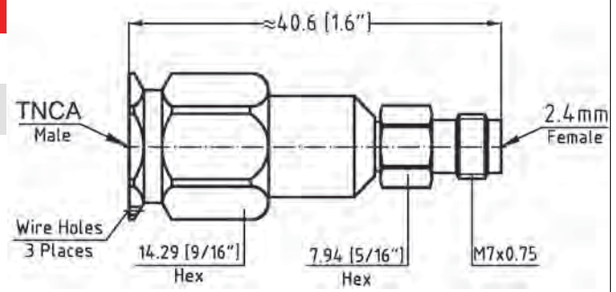

Dimensions shown are Inches over Millimeters or vice versa. Standard units have stainless finish (last 2 digits of the P/N are -02). Interfaces are per DIN 47 223, DIN 47 226, IEC 169-4, IEC 169-7, IEC 169-8, IEC 457-2, IEC 60169-5, IEEE 287, MIL-PRF-39012, MIL DTL-24044, MIL DTL-3643,MIL-STD-348B, where applicable

Spectrum Elektrotechnik GmbH
Germany
www.spectrum-et.com
sales@spectrum-et.com
Phone: +49 / 89 / 35 48 04 0
Fax: +49 / 89 / 35 48 04 90

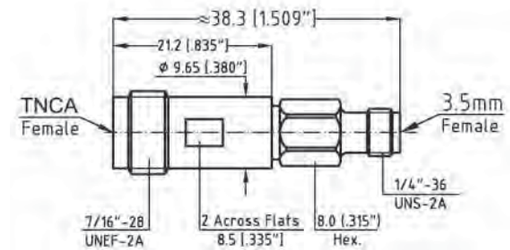

Part - No.	8001-4192-02
Connectors	TNCA-fem. to 3.5 mm-fem.
Frequency	DC -18.0 GHz
VSWR max.	1.03 + 0.005 f (GHz)

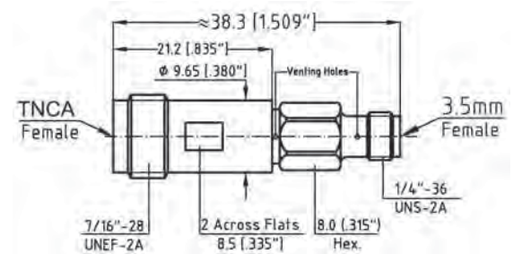

Part - No.	8U0V-4192-02
Connectors	TNCA-fem. to 3.5 mm-fem.
Frequency	DC -18.0 GHz
VSWR max.	1.03 + 0.005 f (GHz)

Higher temperature application

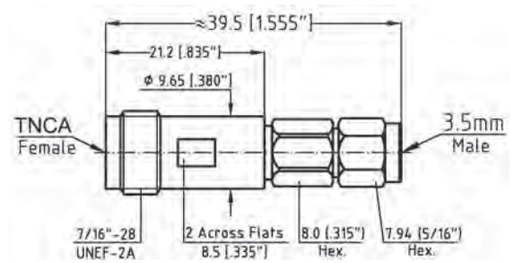

Part - No.	8001-4191-02
Connectors	TNCA-fem. to 3.5 mm-male
Frequency	DC -18.0 GHz
VSWR max.	1.03 + 0.005 f (GHz)

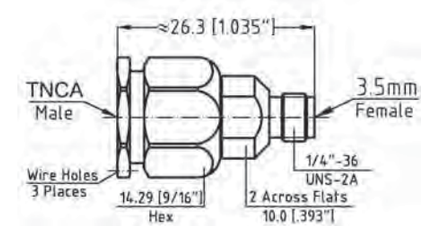

Part - No.	8001-3192-02
Connectors	TNCA-male to 3.5 mm-fem.
Frequency	DC -18.0 GHz
VSWR max.	1.03 + 0.005 f (GHz)

Dimensions shown are Inches over Millimeters or vice versa. Standard units have stainless finish (last 2 digits of the P/N are -02). Interfaces are per DIN 47 223, DIN 47 226, IEC 169-4, IEC 169-7, IEC 169-8, IEC 457-2, IEC 60169-5, IEEE 287, MIL-PRF-39012, MIL DTL-24044, MIL DTL-3643,MIL-STD-348B, where applicable

Spectrum Elektrotechnik GmbH
Germany
www.spectrum-et.com
sales@spectrum-et.com
Phone: +49 / 89 / 35 48 04 0
Fax: +49 / 89 / 35 48 04 90

Part - No.	8001-3191-02
Connectors	TNCA-male to 3.5 mm-male
Frequency	DC -18.0 GHz
VSWR max.	1.03 + 0.005 f (GHz)

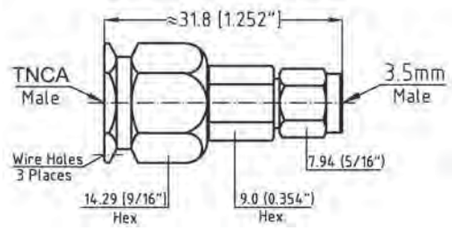

Dimensions shown are Inches over Millimeters or vice versa. Standard units have stainless finish (last 2 digits of the P/N are -02). Interfaces are per DIN 47 223, DIN 47 226, IEC 169-4, IEC 169-7, IEC 169-8, IEC 457-2, IEC 60169-5, IEEE 287, MIL-PRF-39012, MIL DTL-24044, MIL DTL-3643,MIL-STD-348B, where applicable

Spectrum Elektrotechnik GmbH
Germany
www.spectrum-et.com
sales@spectrum-et.com
Phone: +49 / 89 / 35 48 04 0
Fax: +49 / 89 / 35 48 04 90

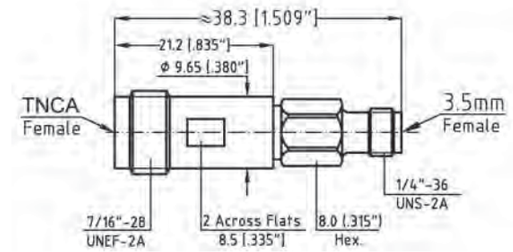

Part - No.	8801-4192-02
Connectors	TNCA-fem. to 3.5 mm-fem.
Frequency	DC -18.0 GHz
VSWR max.	1.03 + 0.005 f (GHz)

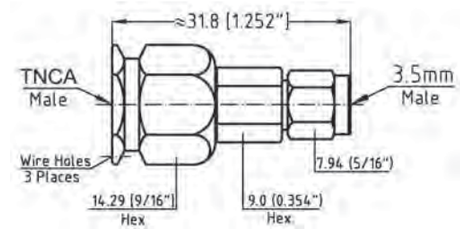

Part - No.	8801-3191-02
Connectors	TNCA-male to 3.5 mm-male
Frequency	DC -18.0 GHz
VSWR max.	1.03 + 0.005 f (GHz)

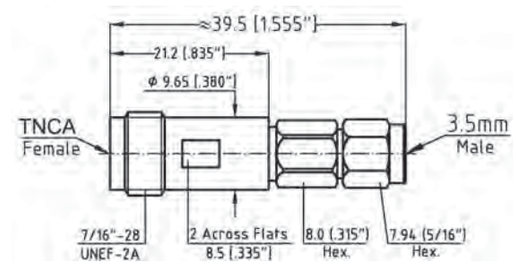

Part - No.	8801-4191-02
Connectors	TNCA-fem. to 3.5 mm-male
Frequency	DC -18.0 GHz
VSWR max.	1.03 + 0.005 f (GHz)

Although our catalog incorporates a very comprehensive range of products, due to our program of continuous development, there is no way that it will contain every product we manufacture. Please consult the factory for the product you require.

Dimensions shown are Inches over Millimeters or vice versa. Standard units have stainless finish (last 2 digits of the P/N are -02). Interfaces are per DIN 47 223, DIN 47 226, IEC 169-4, IEC 169-7, IEC 169-8, IEC 457-2, IEC 60169-5, IEEE 287, MIL-PRF-39012, MIL DTL-24044, MIL DTL-3643,MIL-STD-348B, where applicable

Spectrum Elektrotechnik GmbH
Germany
www.spectrum-et.com
sales@spectrum-et.com
Phone: +49 / 89 / 35 48 04 0
Fax: +49 / 89 / 35 48 04 90

Part - No.	8001-4181-02
Connectors	TNCA-fem. to BNC-fem.
Frequency	DC - 10.0 GHz
VSWR max.	1.03 + 0.005 x f(GHz)

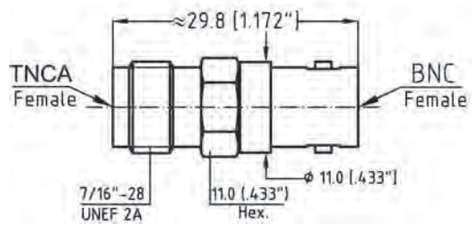

Part - No.	8001-3181-02
Connectors	TNCA-male to BNC-fem.
Frequency	DC - 10.0 GHz
VSWR max.	1.03 + 0.005 x f(GHz)

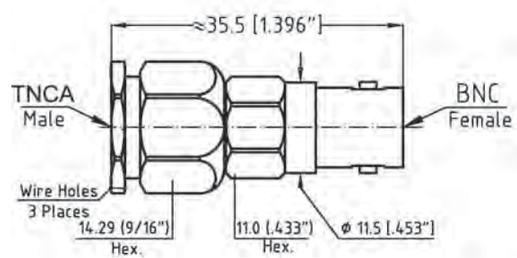

Part - No.	8001-4171-02
Connectors	TNCA-fem. to BNC-male
Frequency	DC - 10.0 GHz
VSWR max.	1.03 + 0.005 x f(GHz)

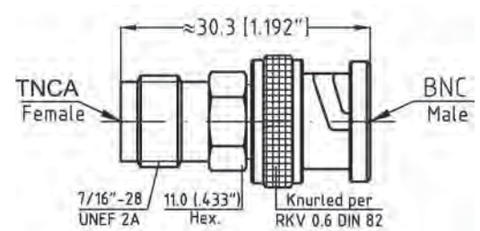

Part - No.	8001-3171-02
Connectors	TNCA-male to BNC-male
Frequency	DC - 10.0 GHz
VSWR max.	1.03 + 0.005 x f(GHz)

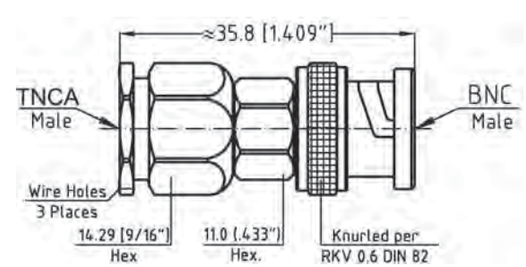

Dimensions shown are Inches over Millimeters or vice versa. Standard units have stainless finish (last 2 digits of the P/N are -02). Interfaces are per DIN 47 223, DIN 47 226, IEC 169-4, IEC 169-7, IEC 169-8, IEC 457-2, IEC 60169-5, IEEE 287, MIL-PRF-39012, MIL DTL-24044, MIL DTL-3643,MIL-STD-348B, where applicable

Spectrum Elektrotechnik GmbH
Germany
www.spectrum-et.com
sales@spectrum-et.com
Phone: +49 / 89 / 35 48 04 0
Fax: +49 / 89 / 35 48 04 90

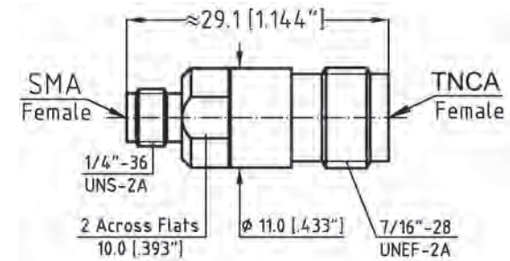

Part - No.	8001-2141-02
Connectors	TNCA-fem. to SMA-fem.
Frequency	DC - 18.0 GHz
VSWR max.	1.06 + 0.005 x f(GHz)

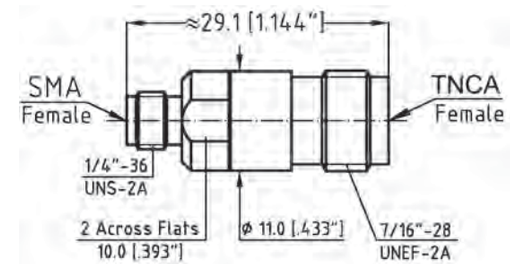

Part - No.	8U01-2141-02
Connectors	TNCA-fem. to SMA-fem.
Frequency	DC - 18.0 GHz
VSWR max.	1.06 + 0.005 x f(GHz)

Higher temperature application

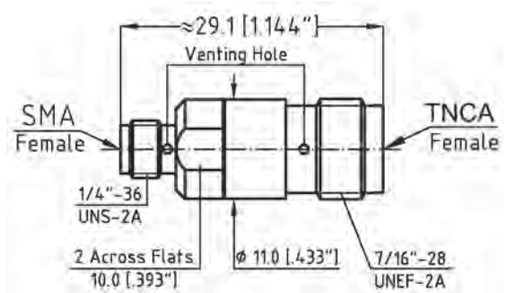

Part - No.	8U0V-2141-02
Connectors	TNCA-fem. to SMA-fem.
Frequency	DC - 18.0 GHz
VSWR max.	1.06 + 0.005 x f(GHz)

Higher temperature application
Unit has venting holes

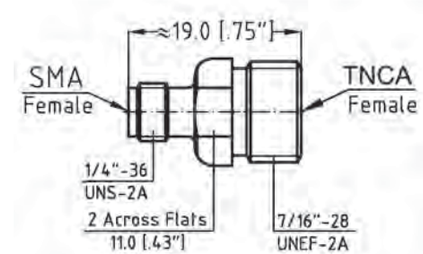

Part - No.	8003-2141-00
Connectors	TNCA-fem. to SMA-fem.
Frequency	DC - 18.0 GHz
VSWR max.	1.06 + 0.005 x f(GHz)

Body is from stainless steel gold plated

Dimensions shown are Inches over Millimeters or vice versa. Standard units have stainless finish (last 2 digits of the P/N are -02). Interfaces are per DIN 47 223, DIN 47 226, IEC 169-4, IEC 169-7, IEC 169-8, IEC 457-2, IEC 60169-5, IEEE 287, MIL-PRF-39012, MIL DTL-24044, MIL DTL-3643,MIL-STD-348B, where applicable

Spectrum Elektrotechnik GmbH
Germany
www.spectrum-et.com
sales@spectrum-et.com
Phone: +49 / 89 / 35 48 04 0
Fax: +49 / 89 / 35 48 04 90

Part - No.	8002-2141-02
Connectors	TNCA-fem. to SMA-fem.
Frequency	DC - 18.0 GHz
VSWR max.	1.06 + 0.005 x f(GHz)

8U02-2141-02 for higher temp. applications

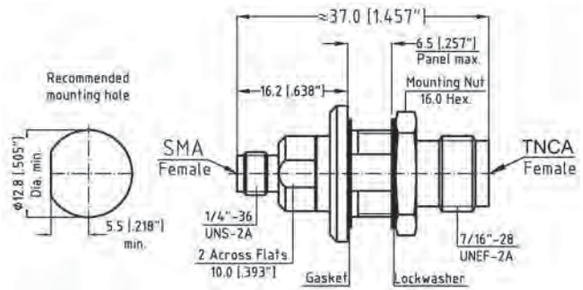

Part - No.	8009-2141-02
Connectors	TNCA-fem. to SMA-fem.
Frequency	DC - 18.0 GHz
VSWR max.	1.06 + 0.005 x f(GHz)

Wire holes in the mounting nut

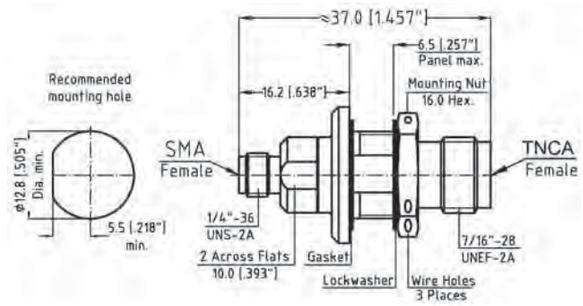

Part - No.	8003-2142-02
Connectors	TNCA-fem. to SMA-fem.
Frequency	DC - 18.0 GHz
VSWR max.	1.06 + 0.005 x f(GHz)

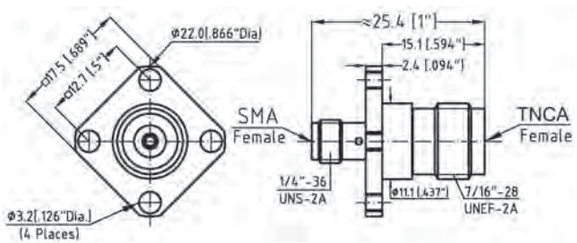

Part - No.	8004-2141-02
Connectors	TNCA-fem. to SMA-fem.
Frequency	DC - 18.0 GHz
VSWR max.	1.06 + 0.005 x f(GHz)

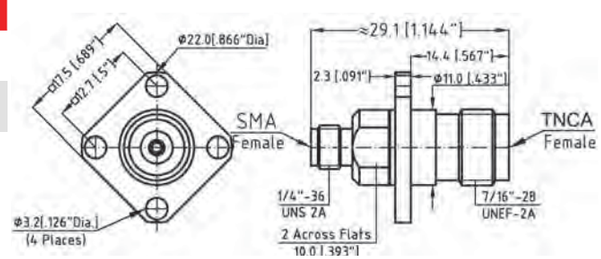

Dimensions shown are Inches over Millimeters or vice versa. Standard units have stainless finish (last 2 digits of the P/N are -02). Interfaces are per DIN 47 223, DIN 47 226, IEC 169-4, IEC 169-7, IEC 169-8, IEC 457-2, IEC 60169-5, IEEE 287, MIL-PRF-39012, MIL DTL-24044, MIL DTL-3643,MIL-STD-348B, where applicable

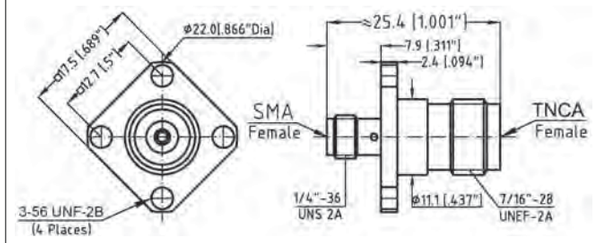

Part - No.	8005-2141-02
Connectors	TNCA-fem. to SMA-fem.
Frequency	DC - 18.0 GHz
VSWR max.	1.06 + 0.005 x f(GHz)

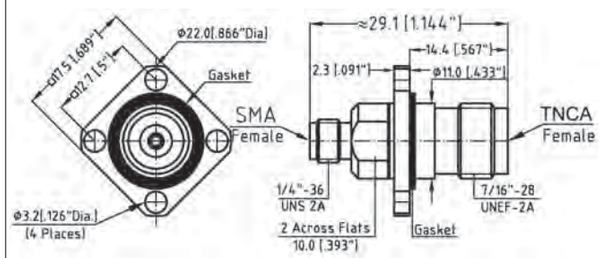

Part - No.	8007-2141-02
Connectors	TNCA-fem. to SMA-fem.
Frequency	DC - 18.0 GHz
VSWR max.	1.06 + 0.005 x f(GHz)

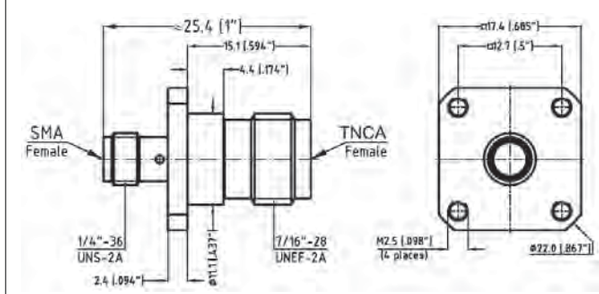

Part - No.	8008-2141-02
Connectors	TNCA-fem. to SMA-fem.
Frequency	DC - 18.0 GHz
VSWR max.	1.06 + 0.005 x f(GHz)

You do not find the Adapter you need for an application? You need technical support? You need price and delivery information? Please contact your nearest Spectrum Representative, or please contact us direct.

Telephone: +49-89-3548-040 Facsimile: +49-89-3548-0490
e-mail: sales@spectrum-et.com www.spectrum-et.com

Dimensions shown are Inches over Millimeters or vice versa. Standard units have stainless finish (last 2 digits of the P/N are -02). Interfaces are per DIN 47 223, DIN 47 226, IEC 169-4, IEC 169-7, IEC 169-8, IEC 457-2, IEC 60169-5, IEEE 287, MIL-PRF-39012, MIL DTL-24044, MIL DTL-3643,MIL-STD-348B, where applicable

Part - No.	8001-1141-02
Connectors	TNCA-fem. to SMA-male
Frequency	DC - 18.0 GHz
VSWR max.	1.06 + 0.005 x f(GHz)

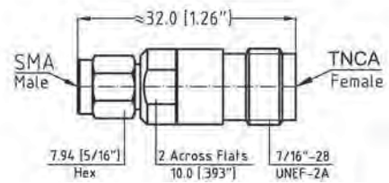

Part - No.	8U01-1141-02
Connectors	TNCA-fem. to SMA-male
Frequency	DC - 18.0 GHz
VSWR max.	1.06 + 0.005 x f(GHz)

Higher temperature application

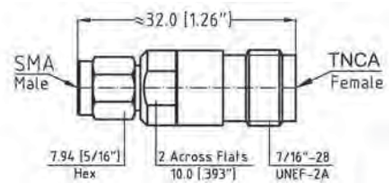

Part - No.	801V-1141-02
Connectors	TNCA-fem. to SMA-male
Frequency	DC - 18.0 GHz
VSWR max.	1.06 + 0.005 x f(GHz)

Unit has venting holes

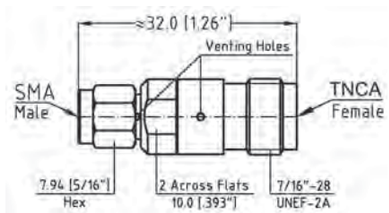

You do not find the Adapter you need for an application? You need technical support? You need price and delivery information? Please contact your nearest Spectrum Representative, or please contact us direct.

Telephone: +49-89-3548-040 Facsimile: +49-89-3548-0490
e-mail: sales@spectrum-et.com www.spectrum-et.com

Dimensions shown are Inches over Millimeters or vice versa. Standard units have stainless finish (last 2 digits of the P/N are -02). Interfaces are per DIN 47 223, DIN 47 226, IEC 169-4, IEC 169-7, IEC 169-8, IEC 457-2, IEC 60169-5, IEEE 287, MIL-PRF-39012, MIL DTL-24044, MIL DTL-3643,MIL-STD-348B, where applicable

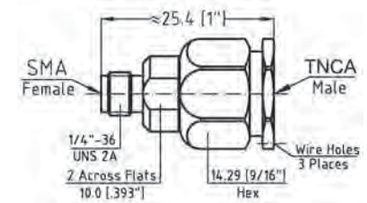

Part - No.	8001-2131-02
Connectors	TNCA-male to SMA-fem.
Frequency	DC - 18.0 GHz
VSWR max.	1.06+ 0.005 x f(GHz)

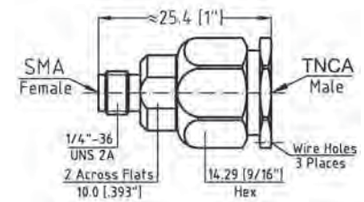

Part - No.	8U01-2131-02
Connectors	TNCA-male to SMA-fem.
Frequency	DC - 18.0 GHz
VSWR max.	1.06 + 0.005 x f(GHz)

Higher temperature application

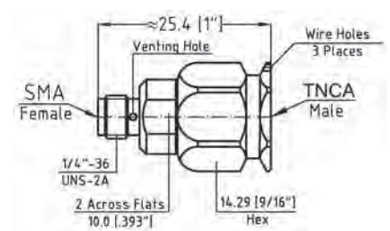

Part - No.	801V-2131-02
Connectors	TNCA-male to SMA-fem.
Frequency	DC - 18.0 GHz
VSWR max.	1.06+ 0.005 x f(GHz)

Unit has venting holes

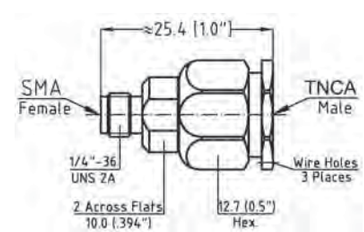

Part - No.	8003-2131-02
Connectors	TNCA-male to SMA-fem.
Frequency	DC - 18.0 GHz
VSWR max.	1.06 + 0.005 x f(GHz)

0.5" Hex at this TNC coupling nut versus 9/16" Hex at the above 3 units

Dimensions shown are Inches over Millimeters or vice versa. Standard units have stainless finish (last 2 digits of the P/N are -02). Interfaces are per DIN 47 223, DIN 47 226, IEC 169-4, IEC 169-7, IEC 169-8, IEC 457-2, IEC 60169-5, IEEE 287, MIL-PRF-39012, MIL DTL-24044, MIL DTL-3643,MIL-STD-348B, where applicable

Part - No.	8002-2131-02
Connectors	TNCA-male to SMA-fem.
Frequency	DC - 18.0 GHz
VSWR max.	1.06 + 0.005 x f(GHz)

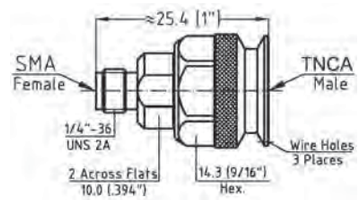

Part - No.	8U02-2131-02
Connectors	TNCA-male to SMA-fem.
Frequency	DC - 18.0 GHz
VSWR max.	1.06 + 0.005 x f(GHz)

Higher temperature application

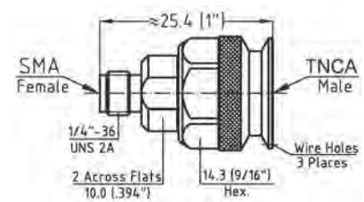

Part - No.	8001-1131-02
Connectors	TNCA-male to SMA-male
Frequency	DC - 18.0 GHz
VSWR max.	1.06+ 0.005 x f(GHz)

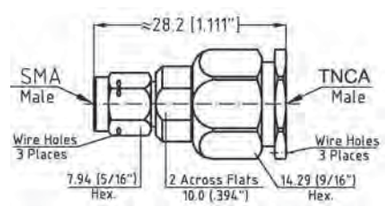

Part - No.	8U01-1131-02
Connectors	TNCA-male to SMA-male
Frequency	DC - 18.0 GHz
VSWR max.	1.06 + 0.005 x f(GHz)

Higher temperature application

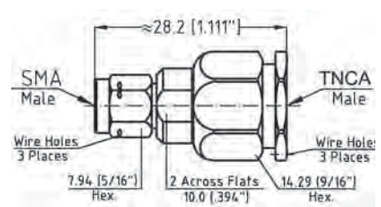

Dimensions shown are Inches over Millimeters or vice versa. Standard units have stainless finish (last 2 digits of the P/N are -02). Interfaces are per DIN 47 223, DIN 47 226, IEC 169-4, IEC 169-7, IEC 169-8, IEC 457-2, IEC 60169-5, IEEE 287, MIL-PRF-39012, MIL DTL-24044, MIL DTL-3643,MIL-STD-348B, where applicable

Spectrum Elektrotechnik GmbH
Germany
www.spectrum-et.com
sales@spectrum-et.com
Phone: +49 / 89 / 35 48 04 0
Fax: +49 / 89 / 35 48 04 90

Part - No.	8090-S001-07
Connectors	TNC-fem. to Special Customer Design
Frequency	DC - 18.0 GHz
VSWR max.	1.06 + 0.005 x f(GHz)

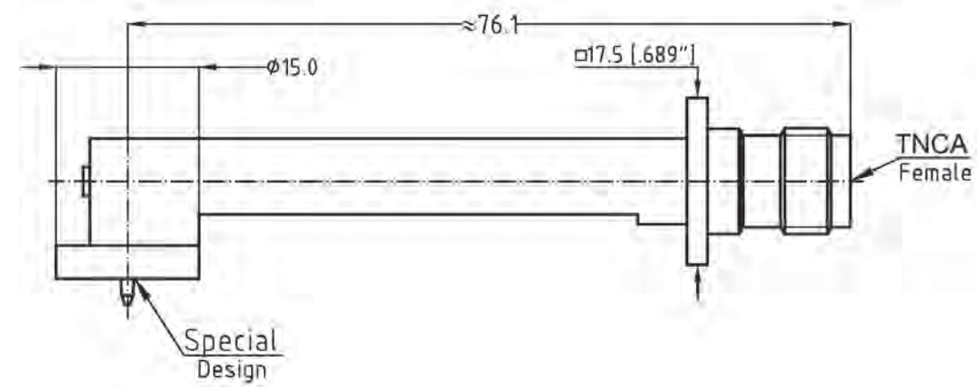

Part - No.	8090-S002-07
Connectors	TNC-fem. to Special Customer Design
Frequency	DC - 18.0 GHz
VSWR max.	1.06 + 0.005 x f(GHz)

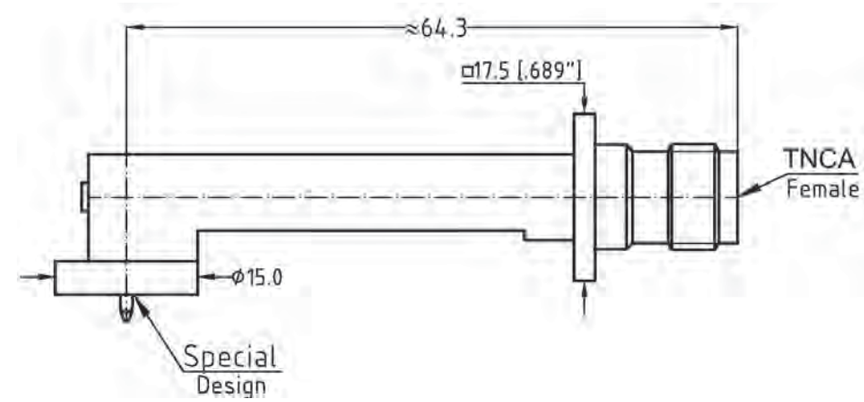

Dimensions shown are Inches over Millimeters or vice versa. Standard units have stainless finish (last 2 digits of the P/N are -02). Interfaces are per DIN 47 223, DIN 47 226, IEC 169-4, IEC 169-7, IEC 169-8, IEC 457-2, IEC 60169-5, IEEE 287, MIL-PRF-39012, MIL DTL-24044, MIL DTL-3643,MIL-STD-348B, where applicable

Spectrum Elektrotechnik GmbH
Germany
www.spectrum-et.com
sales@spectrum-et.com
Phone: +49 / 89 / 35 48 04 0
Fax: +49 / 89 / 35 48 04 90

True swept angled Adapters

although they look like mitred from the outside

1.85mm, 2.4mm, 2.92mm, 3.5mm, TNC and N

Spectrum Elektrotechnik GmbH **when Quality is needed**

80905 Munich, Germany **P.O. Box 450533**

Telephone: +49-89-3548-040 **Facsimile: +49-89-3548-0490**

WWW.SPECTRUM-ET.COM **Email: sales@spectrum-et.com**

X

In-Series and Between-Series Adapters Reverse Sex TNC

If your choice of TNC Reverse Sex Adapter is not shown in this section, please refer to the Table below to determine other possible locations. Should you not find your adapter listed in any section, please consult the factory or your Spectrum Elektrotechnik Area Representative.

TNC Reverse Sex	Section	Page
TNC Reverse Sex Overview & Specifications	Y	1
Between Series TNC Reverse Sex to N		4

Although our catalog incorporates a very comprehensive range of products, due to our program of continuous development, there is no way that it will contain every product we manufacture. Please consult the factory for the product you require.
To improve our Standard Products we reserve the right to make changes. Specifications are therefore subject to change without notice.

Y

Dimensions shown are Inches over Millimeters or vice versa. Standard units have stainless finish (last 2 digits of the P/N are -02). Interfaces are per DIN 47 223, DIN 47 226, IEC 169-4, IEC 169-7, IEC 169-8, IEC 457-2, IEC 60169-5, IEEE 287, MIL-PRF-39012, MIL DTL-24044, MIL DTL-3643,MIL-STD-348B, where applicable

TNC Reverse Sex Specifications

The specifications below are general specifications for all TNC connectors. Specific Data for VSWR, Insertion Loss, R.F. leakage, etc., are available from the factory upon request. Specifications in the following table are recommended for any procurement documents or drawings. In the event of any conflict between these specifications and General Specifications MIL-C-87104/2, these specifications shall govern. These specifications are subject to change according to the latest revision.

REQUIREMENT	GENERAL SPECIFICATIONS
Standard Materials	STEEL corrosion resistant 1.4305 per DIN EN 10088; ASTM-A582 (303), or 1.4404 (316L) respectively. ALUMINUM AlMg4.5Mn per DIN DIN EN 1706, AlMgSi0.5 per DIN EN 1706, AlMgSi1 per DIN EN 1706 (6061-T6 per QQ-A-225/8). BRASS CuZn39Pb3 per DIN 17660 (QQ-B-626 (ASTM-B124), half hard). COPPER BERYLLIUM 33-25 CuBe2PbH per DIN17666(DIN CEN/TS;DIN SPEC 9700)(QQ-C530). TFE Fluorocarbon per DIN 52900 (ASTM-D-1710), or Thermoplast per DIN EN ISO 10350, or PEI per in-house specification respectively for higher temperature applications. SILICONE RUBBER per DIN ISO 3601)(A-A-59588,Class IIB) Gr. 50 - 75. BORIUM NITRITE Dielectric for high power applications per in-house specification
Finish for COPPER BERYLLIUM STAINLESS STEEL ALUMINUM BRASS VARIOUS	Center Contacts shall be gold plated to a minimum thickness of .00005-inch in accordance with ASTM-B-488, Type III, Code C, Class 1.25 shall be passivated per ASTM-A967 Conductive Parts shall have an iridited finish per MIL-DTL-5541 Other parts, such as Coupling Nuts and Back-Bodies shall be anodized per MIL-A-8625. .00003 inch (0.8 µm) min. gold plating per MIL-DTL-45204, or nickel plating per QQ-N-290, as specified. Imoloy .0001 inch (2.5 µm) min. plating, consisting of 55% Copper / 20% Zinc / 25% Tin (on special request).
Design	The design shall be such that the outline dimensions in this catalog are met. In addition, the assembled connector shall meet the interface dimensions.
ELECTRICAL	
Frequency Range	DC - 11.0 GHz min.
Insulation Resistance	The insulation resistance shall not be less than 5,000 megohms.
Voltage Standing Wave Ratio (VSWR)	1.03 + .005 * f (GHz)
Contact Resistance	The center contact resistance drop shall not exceed 1.5 milliohms and the outer contact resistance drop shall not exceed 2.0 milliohms.? (TNC 11 GHz)
Dielectric Withstanding Voltage	The magnitude of the test voltage shall be 1,500 volts rms at sea level.? (TNC 11 GHz)
RF High Potential Withstanding Voltage	The high potential test voltage is 2,000 volts rms.
RF Leakage	Leakage is not applicable.
Insertion Loss	- 60 dB min. (at 2 - 3 GHz) ? (vom TNC 11 GHz) 0.22 dB at 18GHz
MECHANICAL	
Connector Durability	The connector is to be tested and its mating connector shall be subjected to 500 insertion and withdrawal cycles at 12 cycles per minute max. The connector shall show no evidence of mechanical failure and the connector shall meet the mating characteristic requirements.? (TNC 11 GHz)
Cable Retention Force	40 pounds (177.9 N) min.? (vom TNC 11 GHz)
Coupling Nut Retention Force	Not applicable for Female connectors. For male connectors, the axial force is 100 lbs (445 N) max.. The torque is 30 inch-pounds (3.4 Nm) max.? (TNC 11 GHz)
Force to Engage and Disengage	The torque required to engage and disengage shall not exceed 2-4 inch-pounds (0.452-0.678 Nm).
Longitudinal Force max.	Longitudinal force is not applicable.? (TNC 11 GHz)
Mating Characteristics	See interface dimensions shown on next page. Applicable to Females only: oversize pin .057 inch (1.44 mm) max. dia. pin; .125 inch (3.17 mm) deep; insertion force 2 lbs. (8.9 N) max. with. 054 inch (1.37 mm) min. dia. pin; withdrawal force 2.00 oz (.556 N) min. with .052 inch (1.32 mm) max. dia. pin.? (TNC 11 GHz)
Recommended Mating Torque	inch-pounds (2.9 Nm)
ENVIRONMENTAL	
Corrosion (Salt Spray)	Specification MIL-STD-202, Method 101, Test Condition B. The salt solution shall be 5%.
Vibration	Specification MIL-STD-202, Method 204, Test Condition B.
Shock	Specification MIL-STD-202, Method 213, Test Condition I.
Thermal Shock	Specification MIL-STD-202, Method 107, Test Condition B, except high temperature shall be +70°C when the regular Bead is used, +170° when the high temperature Bead is used, and +200°C when TFE Fluorocarbon or Borium Nitrite Dielectric are used.
Moisture Resistance	Specification MIL-STD-202, Method 106. Step 7b (vibration) shall be omitted. Insulation resistance shall be 200 megohms min. within 5 minutes of removal from humidity.
Corona Level	The connector shall not exhibit breakdown (corona) when the applied voltage is 375 volts rms and the altitude is 0 feet.

Y

Dimensions shown are Inches over Millimeters or vice versa. Standard units have stainless finish (last 2 digits of the P/N are -02). Interfaces are per DIN 47 223, DIN 47 226, IEC 169-4, IEC 169-7, IEC 169-8, IEC 457-2, IEC 60169-5, IEEE 287, MIL-PRF-39012, MIL DTL-24044, MIL DTL-3643,MIL-STD-348B, where applicable

Spectrum Elektrotechnik GmbH
Germany
www.spectrum-et.com
sales@spectrum-et.com
Phone: +49 / 89 / 35 48 04 0
Fax: +49 / 89 / 35 48 04 90

Interface Mating Dimensions TNC Reverse Sex

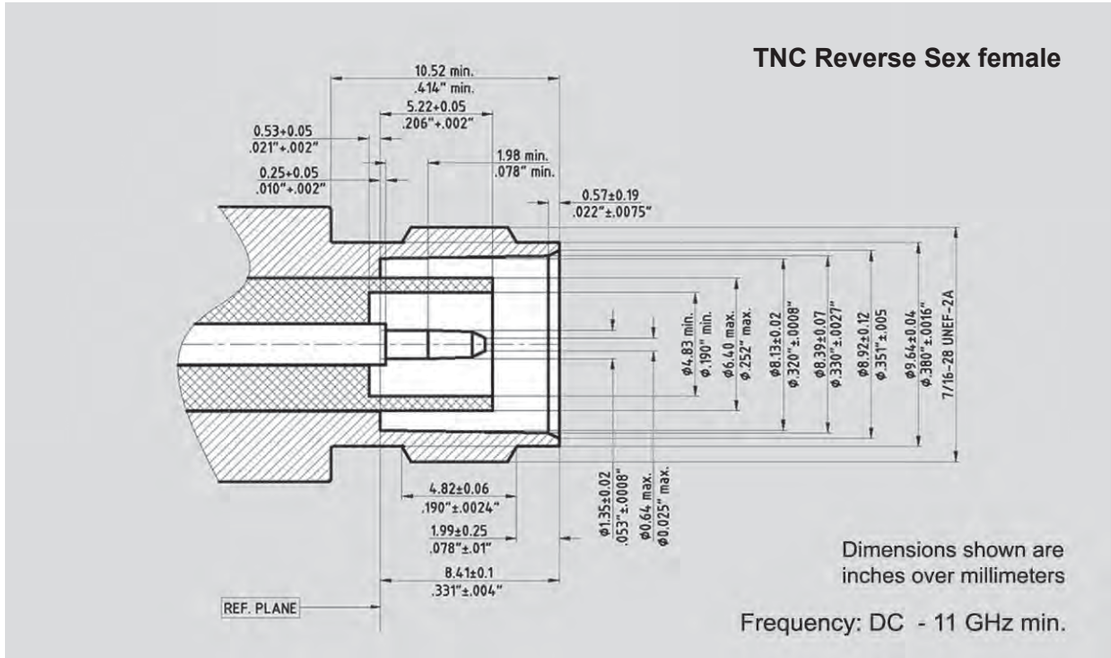

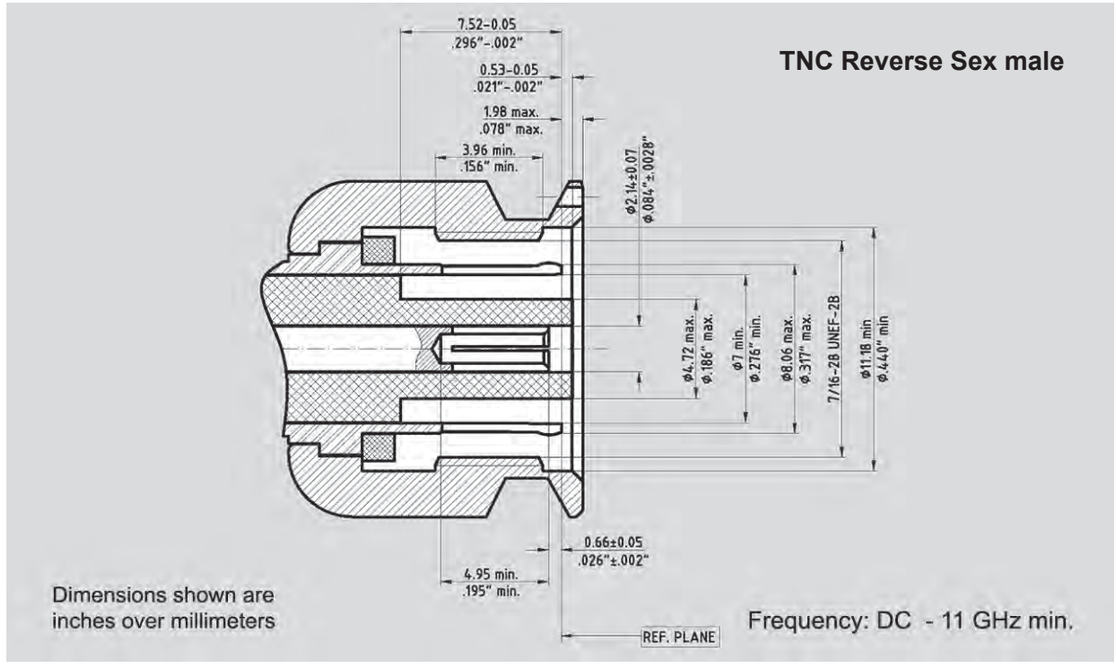

Y

Dimensions shown are Inches over Millimeters or vice versa. Standard units have stainless finish (last 2 digits of the P/N are -02). Interfaces are per DIN 47 223, DIN 47 226, IEC 169-4, IEC 169-7, IEC 169-8, IEC 457-2, IEC 60169-5, IEEE 287, MIL-PRF-39012, MIL DTL-24044, MIL DTL-3643,MIL-STD-348B, where applicable

Spectrum Elektrotechnik GmbH
Germany
www.spectrum-et.com
sales@spectrum-et.com
Phone: +49 / 89 / 35 48 04 0
Fax: +49 / 89 / 35 48 04 90

Part - No.	8RP1-3161-02
Connectors	TNC-rev. sex-fem. to N-fem.
Frequency	DC - 11.0 GHz
VSWR max.	1.03 + 0.005 x f(GHz)

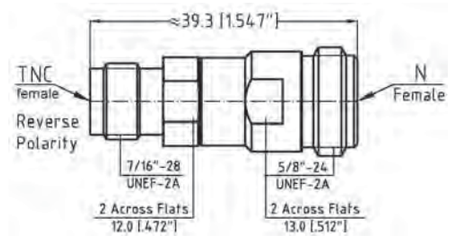

Dimensions shown are Inches over Millimeters or vice versa. Standard units have stainless finish (last 2 digits of the P/N are -02). Interfaces are per DIN 47 223, DIN 47 226, IEC 169-4, IEC 169-7, IEC 169-8, IEC 457-2, IEC 60169-5, IEEE 287, MIL-PRF-39012, MIL DTL-24044, MIL DTL-3643,MIL-STD-348B, where applicable

Spectrum Elektrotechnik GmbH
Germany
www.spectrum-et.com
sales@spectrum-et.com
Phone: +49 / 89 / 35 48 04 0
Fax: +49 / 89 / 35 48 04 90

In-Series and Between-Series Adapters TNX

If your choice of TNX Adapter is not shown in this section, please refer to the Table below to determine other possible locations. Should you not find your adapter listed in any section, please consult the factory or your Spectrum Elektrotechnik Area Representative.

TNX	Section	Page
TNX Overview & Specifications	Z	1
TNX In-Series		4
Between Series TNX to 3.5mm		5
Between Series TNX to 7mm		6
Between Series TNX to N		7
Between Series TNX to SMA		9

Although our catalog incorporates a very comprehensive range of products, due to our program of continuous development, there is no way that it will contain every product we manufacture. Please consult the factory for the product you require.
To improve our Standard Products we reserve the right to make changes. Specifications are therefore subject to change without notice.

Dimensions shown are Inches over Millimeters or vice versa. Standard units have stainless finish (last 2 digits of the P/N are -02). Interfaces are per DIN 47 223, DIN 47 226, IEC 169-4, IEC 169-7, IEC 169-8, IEC 457-2, IEC 60169-5, IEEE 287, MIL-PRF-39012, MIL DTL-24044, MIL DTL-3643,MIL-STD-348B, where applicable

Spectrum Elektrotechnik GmbH
Germany
www.spectrum-et.com
sales@spectrum-et.com
Phone: +49 / 89 / 35 48 04 0
Fax: +49 / 89 / 35 48 04 90

TNX Specifications

The specifications below are general specifications for all TNX connectors. Specific Data for VSWR, Insertion loss, R.F. leakage etc., are available from the factory upon request. Specifications in the following table are recommended for any procurement documents or drawings. In the event of any conflict between these specifications and other documentation, these specifications shall govern. These specifications are subject to change according to the latest revision.

REQUIREMENT	GENERAL SPECIFICATIONS
Standard Materials	STEEL corrosion resistant 1.4305 per DIN EN 10088; ASTM-A582 (303), or 1.4404 (316L) respectively. ALUMINUM AlMg4.5Mn per DIN DIN EN 1706, AlMgSi0.5 per DIN EN 1706, AlMgSi1 per DIN EN 1706 (6061-T6 per QQ-A-225/8). BRASS CuZn39Pb3 per DIN 17660 (QQ-B-626 (ASTM-B124), half hard). COPPER BERYLLIUM 33-25 CuBe2PbH per DIN17666(DIN CEN/TS;DIN SPEC 9700)(QQ-C530). TFE Fluorocarbon per DIN 52900 (ASTM-D-1710) SILICONE RUBBER per DIN ISO 3601)(A-A-59588,Class IIB) Gr. 50 - 75. BORIUM NITRITE Dielectric for high power applications per in-house specification
Finish for COPPER BERYLLIUM STAINLESS STEEL ALUMINUM BRASS VARIOUS	Center Contacts shall be gold plated to a minimum thickness of .00005-inch in accordance with ASTM-B-488, Type III, Code C, Class 1.25 shall be passivated per ASTM-A967 Conductive Parts shall have an iridited finish per MIL-DTL-5541 Other parts, such as Coupling Nuts and Back-Bodies shall be anodized per MIL-A-8625. .00003 inch (0.8 µm) min. gold plating per MIL-DTL-45204, or nickel plating per QQ-N-290, as specified. Imoloy .0001 inch (2.5 µm) min. plating, consisting of 55% Copper / 20% Zinc / 25% Tin (on special request).
Design	The design shall be such that the outline dimensions in this catalog are met. In addition, the assembled connector shall meet the interface dimensions.
ELECTRICAL	
Frequency Range Insulation Resistance Voltage Standing Wave Ratio (VSWR) Contact Resistance Dielectric Withstanding Voltage RF High Potential Withstanding Voltage RF Leakage Insertion Loss	DC - 18.0 GHz min. The insulation resistance shall not be less than 5,000 megohms. 1.06 + .005 x f (GHz) The center contact resistance drop shall not exceed 2.0 milliohms and the outer contact resistance drop shall not exceed 2.0 milliohms. The magnitude of the test voltage shall be 1,500 volts rms at sea level. The RF high potential withstanding voltage is 1,000 volts rms at 5 MHz. Leakage is not applicable. - (90 - f (GHz)) dB (.05 SQT(f(GHz))) dB
MECHANICAL	
Connector Durability Cable Retention Force Coupling Nut Retention Force Force to Engage and Disengage Longitudinal Force max. Mating Characteristics Recommended Mating Torque	The connector is to be tested and its mating connector shall be subjected to 500 insertion and withdrawal cycles at 12 cycles per minute max. The connector shall show no evidence of mechanical failure and the connector shall meet the mating characteristic requirements. 60 pounds (267 N) min. Not applicable for Female connectors. For male connectors , the torque is 50 inch-pounds (5.65 Nm) max.. The axial force is not applicable. The torque required to engage and disengage shall not exceed 2 inch-pounds (0.226 Nm). Longitudinal force is not applicable. Mating Characteristics are not applicable. 23 - 30 inch-pounds (2.6 - 3.4 Nm)
ENVIRONMENTAL	
Corrosion (Salt Spray) Vibration Shock Thermal Shock Moisture Resistance Corona Level	Specification MIL-STD-202, Method 101, Test Condition B. The salt solution shall be 5%. Specification MIL-STD-202, Method 204, Test Condition B. Specification MIL-STD-202, Method 213, Test Condition I. Specification MIL-STD-202, Method 107, Test Condition B, except high temperature shall be +70°C when the regular Bead is used, +170° when the high temperature Bead is used, and +200°C when TFE Fluorocarbon or Borium Nitrite Dielectric are used. Specification MIL-STD-202, Method 106. Step 7b (vibration) shall be omitted. Insulation resistance shall be 200 megohms min. within 5 minutes of removal from humidity. Corona Level is not applicable.

Dimensions shown are Inches over Millimeters or vice versa. Standard units have stainless finish (last 2 digits of the P/N are -02). Interfaces are per DIN 47 223, DIN 47 226, IEC 169-4, IEC 169-7, IEC 169-8, IEC 457-2, IEC 60169-5, IEEE 287, MIL-PRF-39012, MIL DTL-24044, MIL DTL-3643,MIL-STD-348B, where applicable

Spectrum Elektrotechnik GmbH
Germany
www.spectrum-et.com
sales@spectrum-et.com
Phone: +49 / 89 / 35 48 04 0
Fax: +49 / 89 / 35 48 04 90

Interface Mating Dimensions of Type TNX

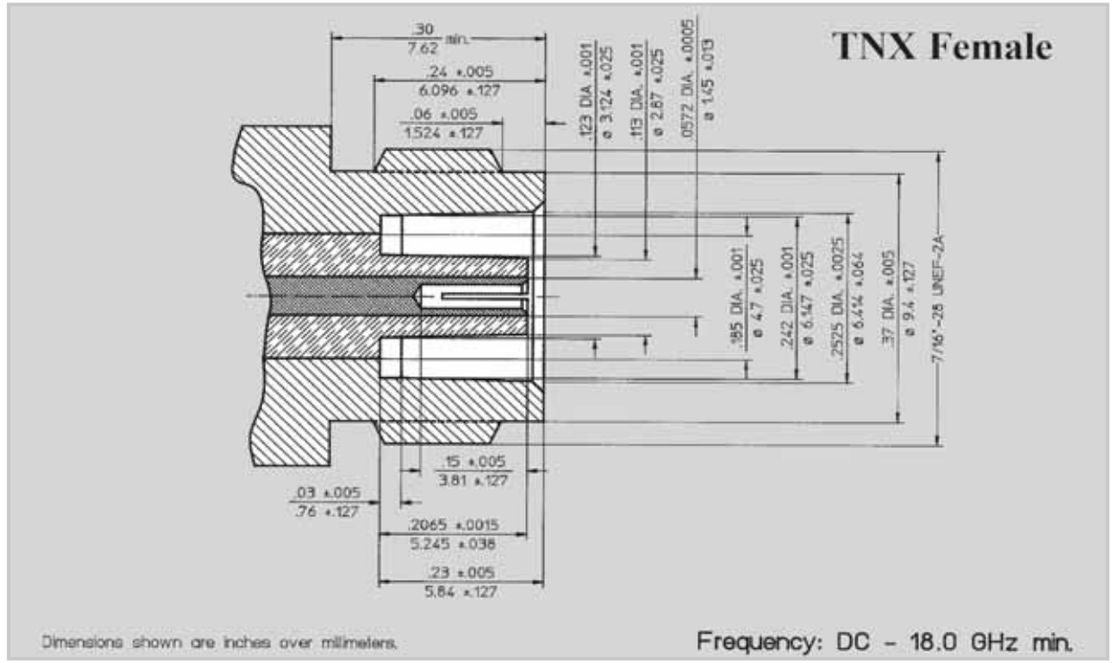

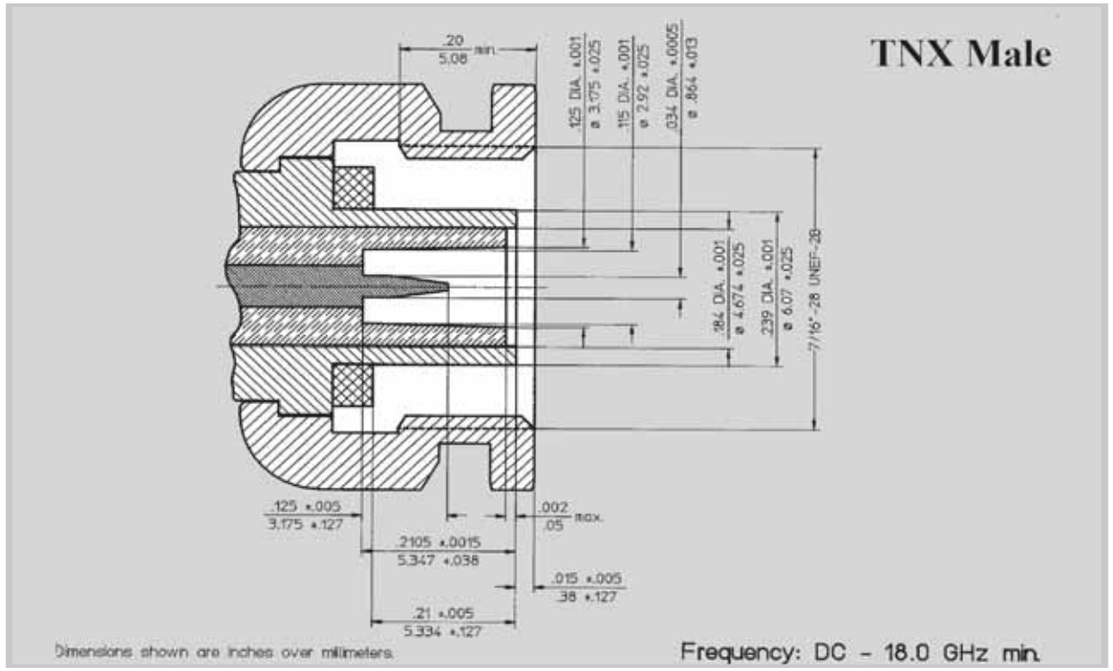

Dimensions shown are Inches over Millimeters or vice versa. Standard units have stainless finish (last 2 digits of the P/N are -02). Interfaces are per DIN 47 223, DIN 47 226, IEC 169-4, IEC 169-7, IEC 169-8, IEC 457-2, IEC 60169-5, IEEE 287, MIL-PRF-39012, MIL DTL-24044, MIL DTL-3643,MIL-STD-348B, where applicable

Spectrum Elektrotechnik GmbH
Germany
www.spectrum-et.com
sales@spectrum-et.com
Phone: +49 / 89 / 35 48 04 0
Fax: +49 / 89 / 35 48 04 90

Part - No.	8001-4949-02
Connectors	TNX-fem. to TNX-fem.
Frequency	DC - 18.0 GHz
VSWR max.	1.06 + 0.005 x f (GHz)

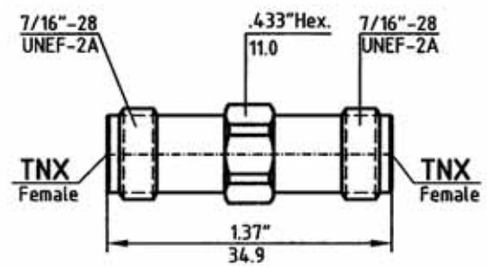

Part - No.	8001-3949-02
Connectors	TNX-male to TNX-fem.
Frequency	DC - 18.0 GHz
VSWR max.	1.06 + 0.005 x f (GHz)

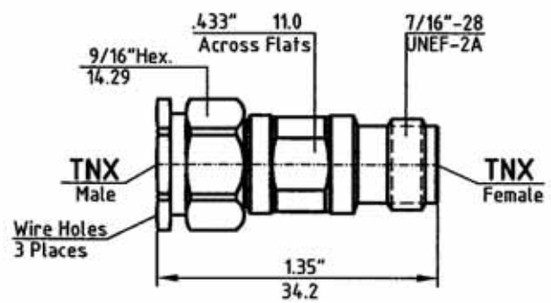

Part - No.	8001-3939-02
Connectors	TNX-male to TNX-male
Frequency	DC - 18.0 GHz
VSWR max.	1.06 + 0.005 x f (GHz)

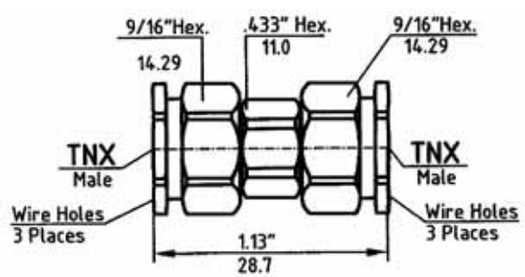

You do not find the Adapter you need for an application? You need technical support? You need price and delivery information? Please contact your nearest Spectrum Representative, or please contact us direct.

Telephone: +49-89-3548-040 Facsimile: +49-89-3548-0490
e-mail: sales@spectrum-et.com www.spectrum-et.com

Dimensions shown are Inches over Millimeters or vice versa. Standard units have stainless finish (last 2 digits of the P/N are -02). Interfaces are per DIN 47 223, DIN 47 226, IEC 169-4, IEC 169-7, IEC 169-8, IEC 457-2, IEC 60169-5, IEEE 287, MIL-PRF-39012, MIL DTL-24044, MIL DTL-3643,MIL-STD-348B, where applicable

Part - No.	8001-4992-02
Connectors	TNX-fem. to 3.5mm-fem.
Frequency	DC - 18.0 GHz
VSWR max.	1.06 + 0.005 x f (GHz)

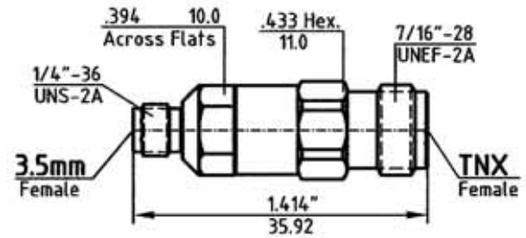

Part - No.	8001-4991-02
Connectors	TNX-fem. to 3.5mm-male
Frequency	DC - 18.0 GHz
VSWR max.	1.06 + 0.005 x f (GHz)

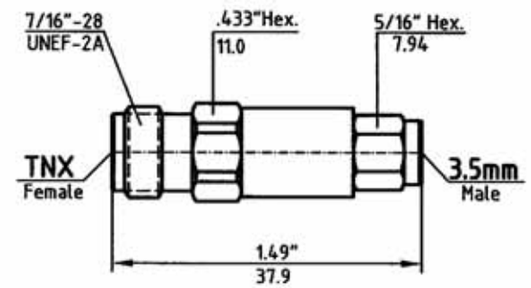

Part - No.	8001-3992-02
Connectors	TNX-male to 3.5mm-fem.
Frequency	DC - 18.0 GHz
VSWR max.	1.06 + 0.005 x f (GHz)

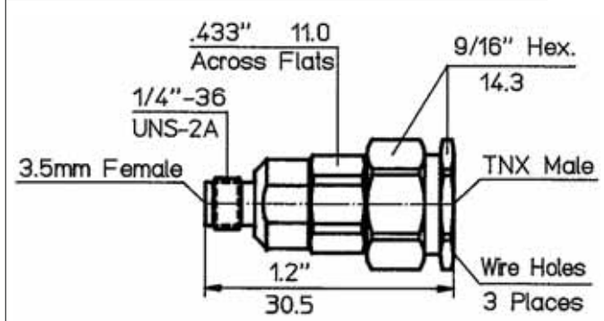

Part - No.	8001-3991-02
Connectors	TNX-male to 3.5mm-male
Frequency	DC - 18.0 GHz
VSWR max.	1.06 + 0.005 x f (GHz)

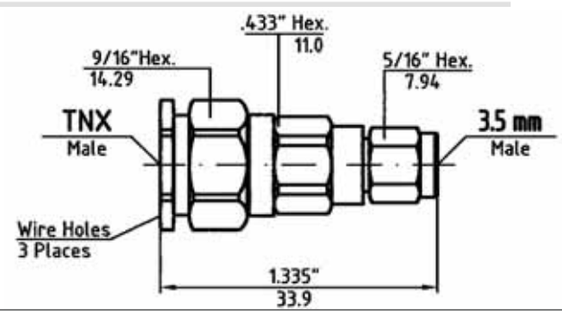

Dimensions shown are Inches over Millimeters or vice versa. Standard units have stainless finish (last 2 digits of the P/N are -02). Interfaces are per DIN 47 223, DIN 47 226, IEC 169-4, IEC 169-7, IEC 169-8, IEC 457-2, IEC 60169-5, IEEE 287, MIL-PRF-39012, MIL DTL-24044, MIL DTL-3643,MIL-STD-348B, where applicable

Part - No.	8001-4990-02
Connectors	TNX-fem. to 7 mm
Frequency	DC - 18.0 GHz
VSWR max.	1.03 + 0.005 x f (GHz)

The Center Conductor of the 7 mm Connector is supplied with 4 slots. If you require 6 slots, Part Number changes to: **8001 - 4996 - 02**

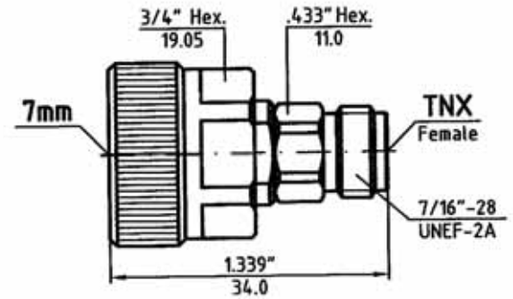

Part - No.	8001-3990-02
Connectors	TNX-male to 7 mm
Frequency	DC - 18.0 GHz
VSWR max.	1.03 + 0.005 x f (GHz)

The Center Conductor of the 7 mm Connector is supplied with 4 slots. If you require 6 slots, Part Number changes to: **8001 - 3996 - 02**

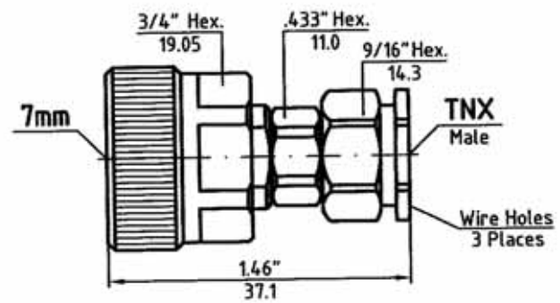

Dimensions shown are Inches over Millimeters or vice versa. Standard units have stainless finish (last 2 digits of the P/N are -02). Interfaces are per DIN 47 223, DIN 47 226, IEC 169-4, IEC 169-7, IEC 169-8, IEC 457-2, IEC 60169-5, IEEE 287, MIL-PRF-39012, MIL DTL-24044, MIL DTL-3643,MIL-STD-348B, where applicable

Spectrum Elektrotechnik GmbH
Germany
www.spectrum-et.com
sales@spectrum-et.com
Phone: +49 / 89 / 35 48 04 0
Fax: +49 / 89 / 35 48 04 90

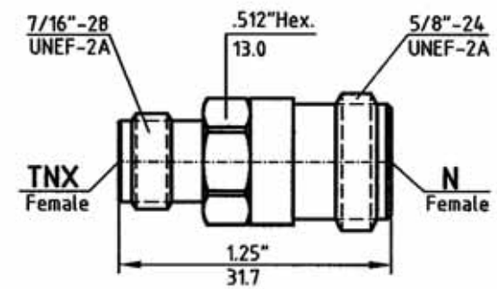

Part - No.	8001-4961-02
Connectors	TNX-fem. to N-fem.
Frequency	DC - 18.0 GHz
VSWR max.	1.06 + 0.005 x f (GHz)

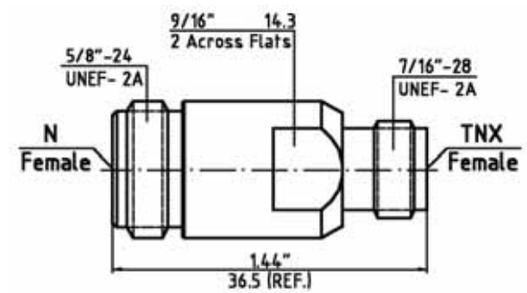

Part - No.	8002-4961-02
Connectors	TNX-fem. to N-fem.
Frequency	DC - 18.0 GHz
VSWR max.	1.06 + 0.005 x f (GHz)

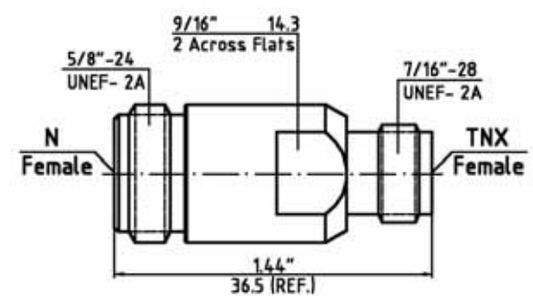

Part - No.	8U02-4961-02
Connectors	TNX-fem. to N-fem.
Frequency	DC - 18.0 GHz
VSWR max.	1.06 + 0.005 x f (GHz)

Higher Temperature Application

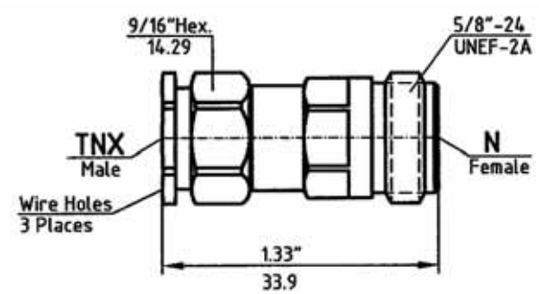

Part - No.	8001-3961-02
Connectors	TNX-male to N-fem.
Frequency	DC - 18.0 GHz
VSWR max.	1.06 + 0.005 x f (GHz)

Dimensions shown are Inches over Millimeters or vice versa. Standard units have stainless finish (last 2 digits of the P/N are -02). Interfaces are per DIN 47 223, DIN 47 226, IEC 169-4, IEC 169-7, IEC 169-8, IEC 457-2, IEC 60169-5, IEEE 287, MIL-PRF-39012, MIL DTL-24044, MIL DTL-3643,MIL-STD-348B, where applicable

Spectrum Elektrotechnik GmbH
Germany
www.spectrum-et.com
sales@spectrum-et.com
Phone: +49 / 89 / 35 48 04 0
Fax: +49 / 89 / 35 48 04 90

Part - No.	8001-4951-02
Connectors	TNX-fem. to N-male
Frequency	DC - 18.0 GHz
VSWR max.	1.06 + 0.005 x f (GHz)

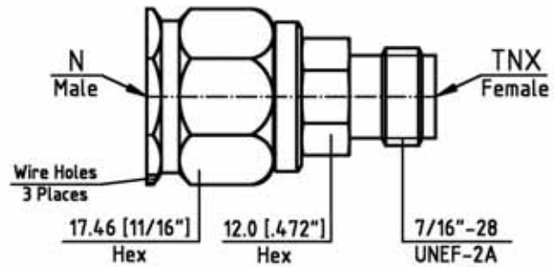

Part - No.	8U01-4951-02
Connectors	TNX-fem. to N-male
Frequency	DC - 18.0 GHz
VSWR max.	1.06 + 0.005 x f (GHz)

Higher Temperature Application

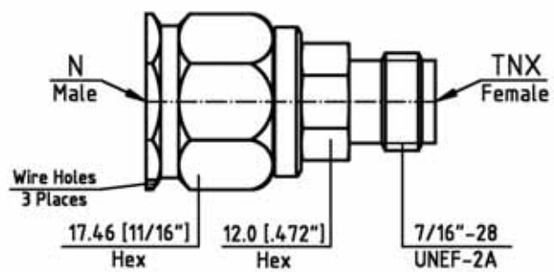

Part - No.	8001-3951-02
Connectors	TNX-male to N-male
Frequency	DC - 18.0 GHz
VSWR max.	1.06 + 0.005 x f (GHz)

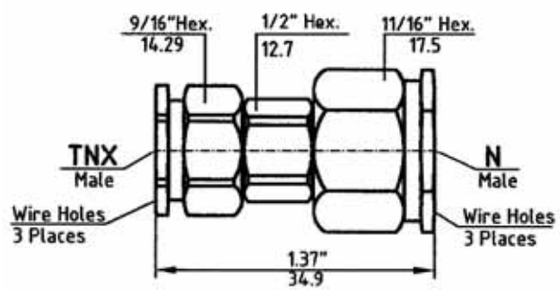

You do not find the Adapter you need for an application? You need technical support? You need price and delivery information? Please contact your nearest Spectrum Representative, or please contact us direct.

Telephone: +49-89-3548-040 Facsimile: +49-89-3548-0490
e-mail: sales@spectrum-et.com www.spectrum-et.com

Dimensions shown are Inches over Millimeters or vice versa. Standard units have stainless finish (last 2 digits of the P/N are -02). Interfaces are per DIN 47 223, DIN 47 226, IEC 169-4, IEC 169-7, IEC 169-8, IEC 457-2, IEC 60169-5, IEEE 287, MIL-PRF-39012, MIL DTL-24044, MIL DTL-3643,MIL-STD-348B, where applicable

Part - No.	8001-2149-02
Connectors	TNX-fem. to SMA-fem.
Frequency	DC - 18.0 GHz
VSWR max.	1.06 + 0.005 x f (GHz)

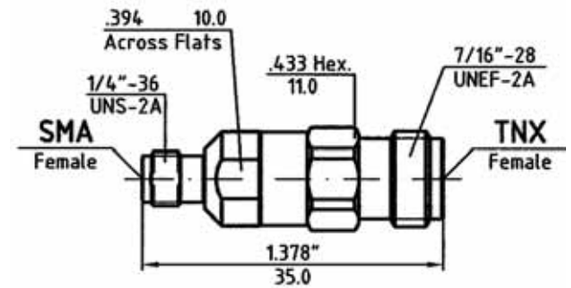

Part - No.	8001-1149-02
Connectors	TNX-fem. to SMA-male
Frequency	DC - 18.0 GHz
VSWR max.	1.06 + 0.005 x f (GHz)

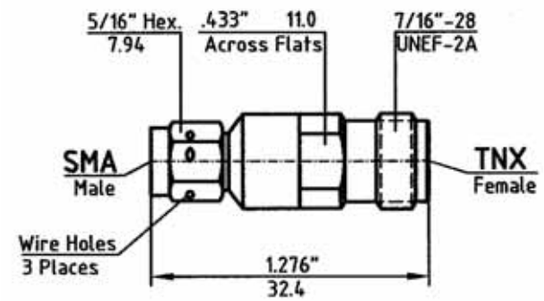

Part - No.	8001-2139-02
Connectors	TNX-male to SMA-fem.
Frequency	DC - 18.0 GHz
VSWR max.	1.06 + 0.005 x f (GHz)

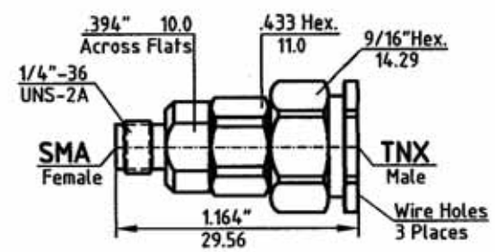

Part - No.	8001-1139-02
Connectors	TNX-male to SMA-male
Frequency	DC - 18.0 GHz
VSWR max.	1.06 + 0.005 x f (GHz)

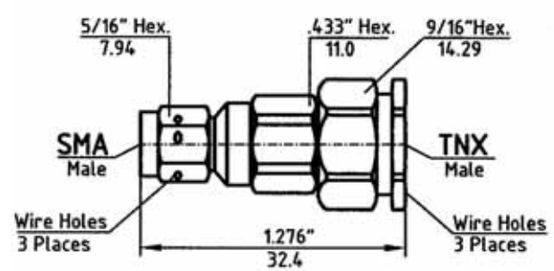

Dimensions shown are Inches over Millimeters or vice versa. Standard units have stainless finish (last 2 digits of the P/N are -02). Interfaces are per DIN 47 223, DIN 47 226, IEC 169-4, IEC 169-7, IEC 169-8, IEC 457-2, IEC 60169-5, IEEE 287, MIL-PRF-39012, MIL DTL-24044, MIL DTL-3643,MIL-STD-348B, where applicable

Metric Thread Adapters are very similar to DIN- or MIL- Adapters. The main difference is that they are using Metric Thread in the coupling nut of the male connector and at the body of the female connector, instead of the Whitworth Thread.

If your choice of Metric Thread Adapter is not shown in this section, please refer to the Table below to determine other possible locations. Should you not find your adapter listed in any section, please consult the factory or your Spectrum Elektrotechnik Area Representative.

Metric Thread Adapters	Section	Page
Overview	AA	1
3.5mm Metric Thread Specifications		2
Between Series 3.5mm Metric Thread to 3.5mm		4
Between Series 3.5mm Metric Thread to 2.4mm		5
N Metric Thread Specifications		6
Between Series N Metric Thread to N		8
Between Series N Metric Thread to 3.5mm		9
Between Series N Metric Thread to SMA		10
SMA Metric Thread Specifications		12
Between Series SMA Metric Thread to SMA		14

Although our catalog incorporates a very comprehensive range of products, due to our program of continuous development, there is no way that it will contain every product we manufacture. Please consult the factory for the product you require.
To improve our Standard Products we reserve the right to make changes. Specifications are therefore subject to change without notice.

Dimensions shown are Inches over Millimeters or vice versa. Standard units have stainless finish (last 2 digits of the P/N are -02). Interfaces are per DIN 47 223, DIN 47 226, IEC 169-4, IEC 169-7, IEC 169-8, IEC 457-2, IEC 60169-5, IEEE 287, MIL-PRF-39012, MIL DTL-24044, MIL DTL-3643,MIL-STD-348B, where applicable

3.5 mm Metric Thread Specifications

The specifications below are general specifications for all 3.5mm connectors. Specific Data for VSWR, Insertion Loss, R.F. leakage, etc., are available from the factory upon request. Specifications in the following table are recommended for any procurement documents or drawings. In the event of any conflict between these specifications and General Specifications IEEE 287, these specifications shall govern. These specifications are subject to change according to the latest revision.

REQUIREMENT	GENERAL SPECIFICATIONS
Standard Materials	STEEL corrosion resistant 1.4305 per DIN EN 10088; ASTM-A582 (303), or 1.4404 (316L) respectively. ALUMINUM AlMg4.5Mn per DIN DIN EN 1706, AlMgSi0.5 per DIN EN 1706, AlMgSi1 per DIN EN 1706 (6061-T6 per QQ-A-225/8). BRASS CuZn39Pb3 per DIN 17660 (QQ-B-626 (ASTM-B124), half hard). COPPER BERYLLIUM 33-25 CuBe2PbH per DIN17666(DIN CEN/TS;DIN SPEC 9700)(QQ-C530). Thermoplast per DIN EN ISO 10350, respectively PEI per in-house specification for higher temperature applications. SILICONE RUBBER per DIN ISO 3601 (A-A-59588,Class IIB) Gr. 50 - 75. BORIUM NITRITE Dielectric for high power applications per in-house specification
Finish for COPPER BERYLLIUM	Center Contacts shall be gold plated to a minimum thickness of .00005-inch in accordance with ASTM-B-488, Type III, Code C, Class 1.25
STAINLESS STEEL	shall be passivated per ASTM-A967
ALUMINUM	Conductive Parts shall have an iridited finish per MIL-DTL-5541 Other parts, such as Coupling Nuts and Back-Bodies shall be anodized per MIL-A-8625.
BRASS	.00003 inch (0.8 µm) min. gold plating per MIL-DTL-45204, or nickel plating per QQ-N-290, as specified.
VARIOUS	Imoloy .0001 inch (2.5 µm) min. plating, consisting of 55% Copper / 20% Zinc / 25% Tin (on special request).
Design	The design shall be such that the outline dimensions in this catalog are met. In addition, the assembled connector shall meet the interface dimensions.
ELECTRICAL	
Frequency Range	DC - 26.5 GHz and DC to 33.0 GHz respectively.
Insulation Resistance	Not applicable.
Return Loss (VSWR)	1.06 + 0.005 x f (GHz)
Contact Resistance	The center contact resistance is 0.75 milliohms and the outer contact resistance 0.13 milliohms.
Dielectric Withstanding Voltage	Not applicable.
RF High Potential	Not applicable.
Withstanding Voltage	RF high potential withstanding voltage is is not applicable. Leakage is not applicable.
Shielding effectiveness	100 dB
Insertion Loss	0.30 dB @ 33GHz
MECHANICAL	
Connect/Disconnect Life	3000 cycles
Maximum insertion force	5.6 N
Withdrawal force	4.6 N max.
Coupling torque	1.3 - 1.7 Nm.
Maximum safety torque	TBD Nm
Depth of insertion	1.5 mm
ENVIRONMENTAL	
Corrosion (Salt Spray)	Specification MIL-STD-202, Method 101, Test Condition B. The salt solution shall be 5%.
Vibration	Specification MIL-STD-202, Method 204, Test Condition D.
Shock	Specification MIL-STD-202, Method 213, Test Condition I.
Thermal Shock	Specification MIL-STD-202, Method 107, Test Condition B, except high temperature shall be +70°C when the regular Bead is used, +170° when the high temperature Bead is used, and +200°C when TFE Fluorocarbon or Borium Nitrite Dielectric are used.
Moisture Resistance	Specification MIL-STD-202, Method 106. Step 7b (vibration) shall be omitted. Insulation resistance shall be 200 megohms min. within 5 minutes of removal from humidity.
Corona Level	The Corona Level is not applicable.

Dimensions shown are Inches over Millimeters or vice versa. Standard units have stainless finish (last 2 digits of the P/N are -02). Interfaces are per DIN 47 223, DIN 47 226, IEC 169-4, IEC 169-7, IEC 169-8, IEC 457-2, IEC 60169-5, IEEE 287, MIL-PRF-39012, MIL DTL-24044, MIL DTL-3643,MIL-STD-348B, where applicable

Spectrum Elektrotechnik GmbH
Germany
www.spectrum-et.com
sales@spectrum-et.com
Phone: +49 / 89 / 35 48 04 0
Fax: +49 / 89 / 35 48 04 90

Interface Mating Dimensions 3.5mm Metric Thread

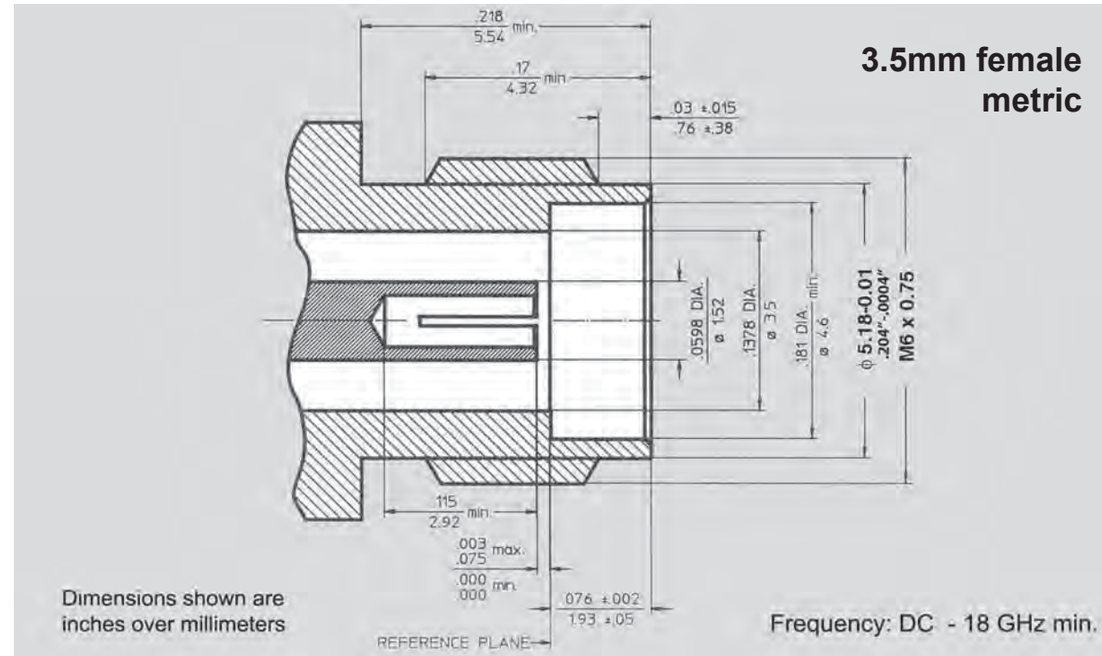

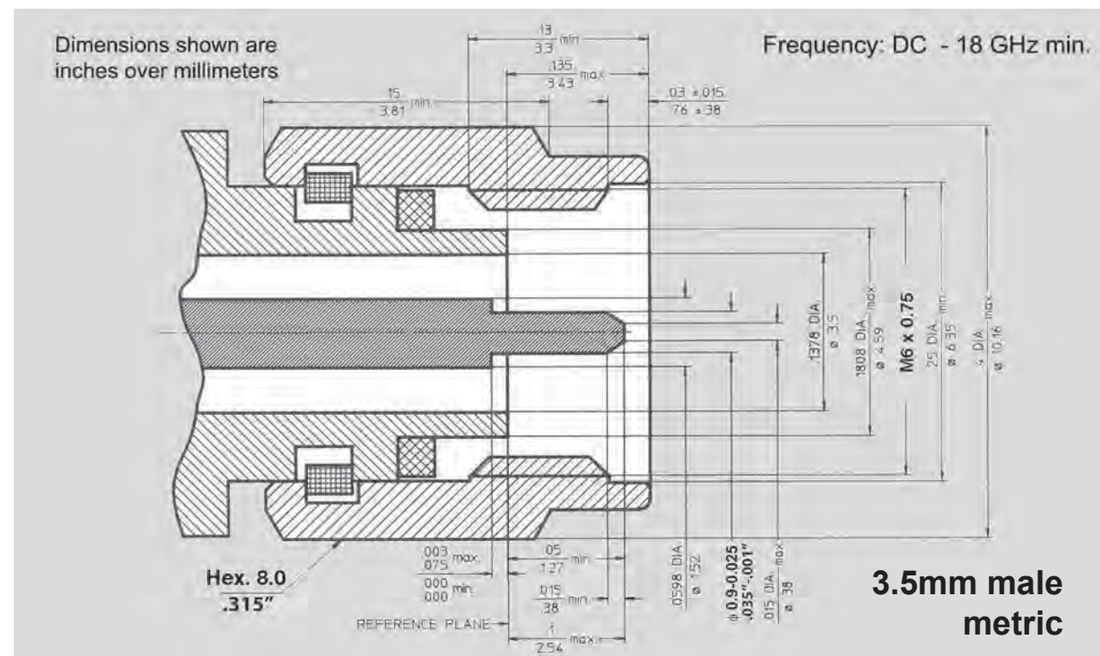

Dimensions shown are Inches over Millimeters or vice versa. Standard units have stainless finish (last 2 digits of the P/N are -02). Interfaces are per DIN 47 223, DIN 47 226, IEC 169-4, IEC 169-7, IEC 169-8, IEC 457-2, IEC 60169-5, IEEE 287, MIL-PRF-39012, MIL DTL-24044, MIL DTL-3643,MIL-STD-348B, where applicable

Spectrum Elektrotechnik GmbH
Germany
www.spectrum-et.com
sales@spectrum-et.com
Phone: +49 / 89 / 35 48 04 0
Fax: +49 / 89 / 35 48 04 90

Adapters with 3.5mm-Metric to 3.5mm

Part - No.	8001-9F92-02
Connectors	3.5mm-Metric-f to 3.5mm-f
Frequency	DC - 26.5 GHz
VSWR max.	1.03 + 0.003 x f (GHz)

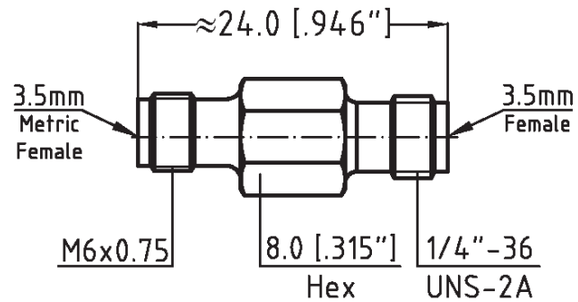

Part - No.	8001-9M91-02
Connectors	3.5mm-Metric-m to 3.5mm-m
Frequency	DC - 26.5 GHz
VSWR max.	1.03 + 0.003 x f (GHz)

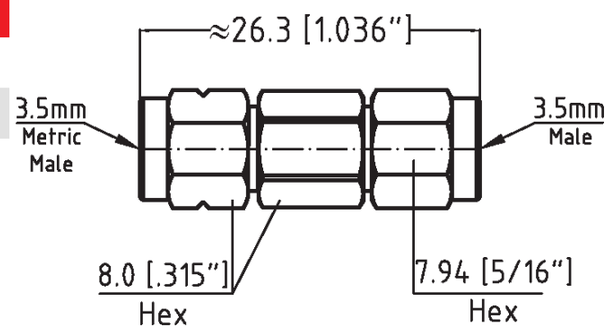

Part - No.	8001-9M92-02
Connectors	3.5mm-Metric-m to 3.5mm-f
Frequency	DC - 26.5 GHz
VSWR max.	1.03 + 0.003 x f (GHz)

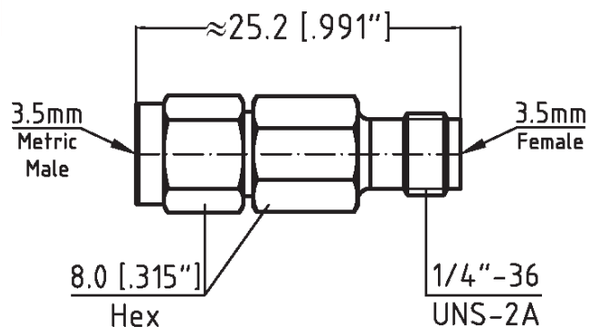

Part - No.	8001-9F91-02
Connectors	3.5mm-Metric-f to 3.5mm-m
Frequency	DC - 26.5 GHz
VSWR max.	1.03 + 0.003 x f (GHz)

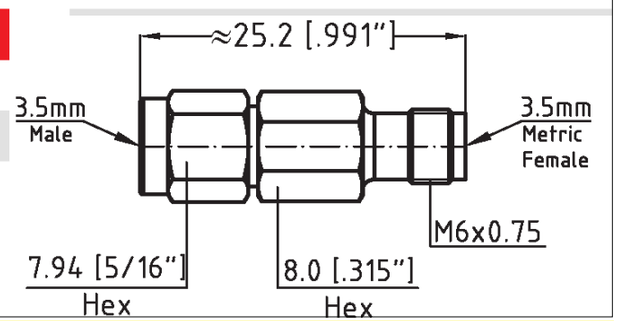

Dimensions shown are Inches over Millimeters or vice versa. Standard units have stainless finish (last 2 digits of the P/N are -02). Interfaces are per DIN 47 223, DIN 47 226, IEC 169-4, IEC 169-7, IEC 169-8, IEC 457-2, IEC 60169-5, IEEE 287, MIL-PRF-39012, MIL DTL-24044, MIL DTL-3643,MIL-STD-348B, where applicable

Spectrum Elektrotechnik GmbH
Germany
www.spectrum-et.com
sales@spectrum-et.com
Phone: +49 / 89 / 35 48 04 0
Fax: +49 / 89 / 35 48 04 90

Adapters with 3.5mm-Metric to 2.4mm

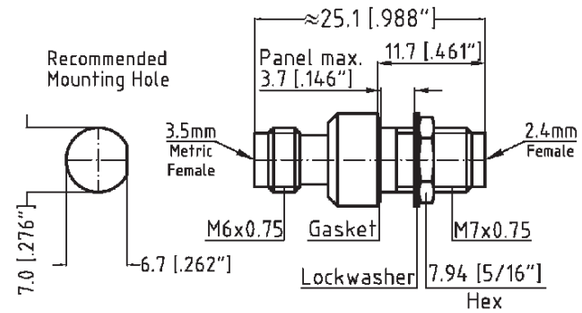

Part - No.	8002-HF9F-02
Connectors	3.5mm-metric fem. to 2.4mm fem.
Frequency	DC - 35.0 GHz
VSWR max.	1.03 + 0.003 x f (GHz)

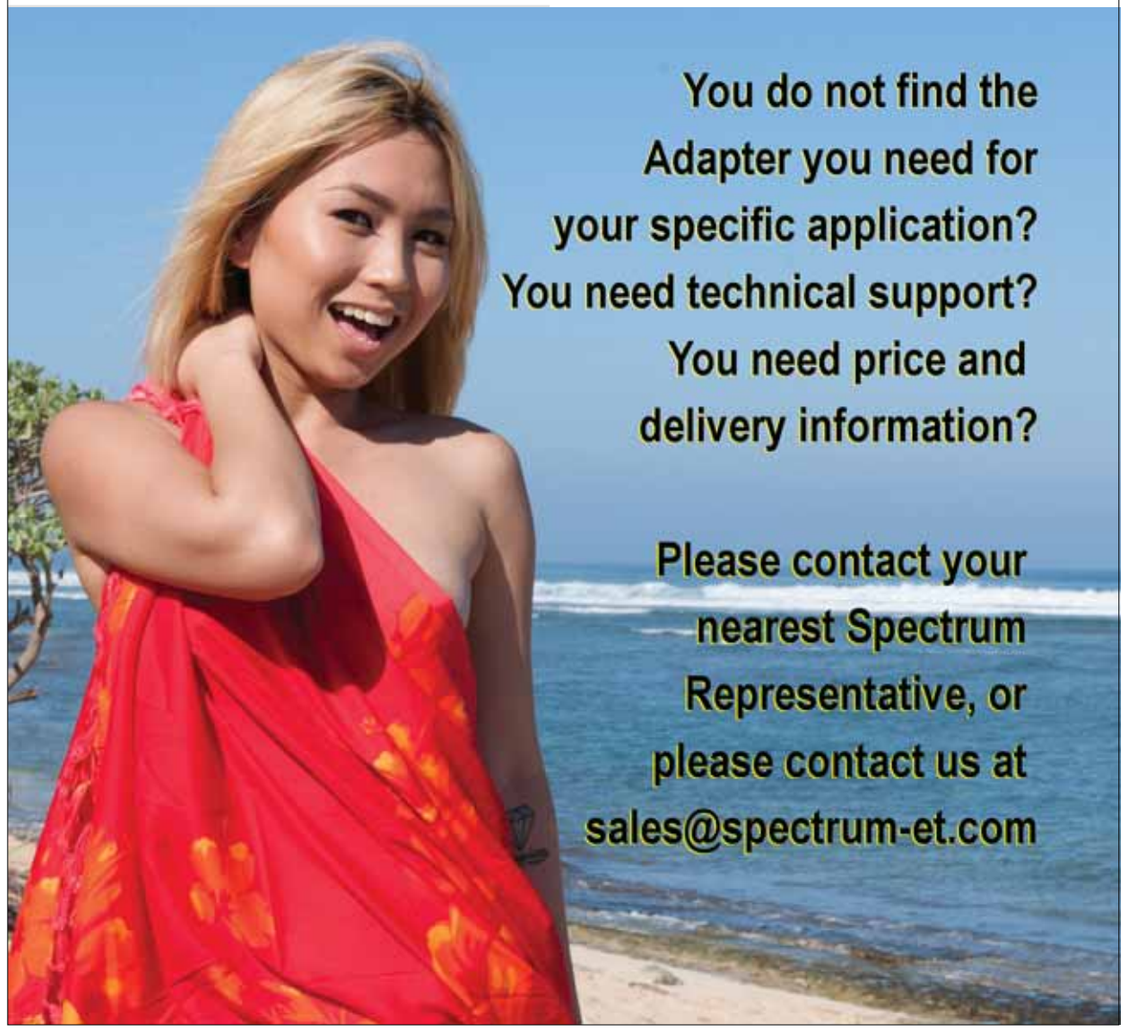

Dimensions shown are Inches over Millimeters or vice versa. Standard units have stainless finish (last 2 digits of the P/N are -02). Interfaces are per DIN 47 223, DIN 47 226, IEC 169-4, IEC 169-7, IEC 169-8, IEC 457-2, IEC 60169-5, IEEE 287, MIL-PRF-39012, MIL DTL-24044, MIL DTL-3643,MIL-STD-348B, where applicable

Spectrum Elektrotechnik GmbH
Germany
www.spectrum-et.com
sales@spectrum-et.com
Phone: +49 / 89 / 35 48 04 0
Fax: +49 / 89 / 35 48 04 90

N-Metric Thread Specifications

The specifications below are general specifications for all N connectors. Specific Data for VSWR, Insertion Loss, R.F. leakage, etc., are available from the factory upon request. Specifications in the following table are recommended for any procurement documents or drawings. In the event of any conflict between these specifications and General Specifications MIL-PRF-39012, these specifications shall govern. These specifications are subject to change according to the latest revision.

REQUIREMENT	GENERAL SPECIFICATIONS
Standard Materials	STEEL corrosion resistant 1.4305 per DIN EN 10088 (ASTM-A484 or ASTM-A-582-80). ALUMINUM AlMg4.5Mn per DIN DIN EN 1706, AlMgSi0.5 per DIN EN 1706, AlMgSi1 per DIN EN 1706 (6061-T6 per QQ-A-225/8). BRASS CuZn39Pb3 per DIN 17660 (QQ-B-626 (ASTM-B124), half hard). COPPER BERYLLIUM 33-25 CuBe2PbH per DIN17666(DIN CEN/TS;DIN SPEC 9700)(QQ-C530). TFE Fluorocarbon per DIN 52900 (ASTM-D-1710), or Thermoplast per DIN EN ISO 10350, or PEI per in-house specification respectively for higher temperature applications. SILICONE RUBBER per DIN ISO 3601)(A-A-59588,Class IIB) Gr. 50 - 75. BORIUM NITRITE Dielectric for high power applications per in-house specification
Finish for COPPER BERYLLIUM STAINLESS STEEL ALUMINUM BRASS VARIOUS	Center Contacts shall be gold plated to a minimum thickness of .00005-inch in accordance with ASTM-B-488, Type III, Code C, Class 1.25 shall be passivated per ASTM-A967 Conductive Parts shall have an iridited finish per MIL-DTL-5541 Other parts, such as Coupling Nuts and Back-Bodies shall be anodized per MIL-A-8625. .00003 inch (0.8 µm) min. gold plating per MIL-DTL-45204, or nickel plating per QQ-N-290, as specified. Imoloy .0001 inch (2.5 µm) min. plating, consisting of 55% Copper / 20% Zinc / 25% Tin (on special request).
Design	The design shall be such that the outline dimensions in this catalog are met. In addition, the assembled connector shall meet the interface dimensions.
ELECTRICAL	
Frequency Range	DC - 18.0 GHz min., optional DC - 20.0 GHz
Insulation Resistance	The insulation resistance shall not be less than 5,000 megohms.
Voltage Standing Wave Ratio (VSWR)	1.06 + .005 x f (GHz)
Contact Resistance	The center contact resistance drop shall not exceed 1.0 milliohms and the outer contact resistance drop shall not exceed 0.2 milliohms.
Dielectric Withstanding Voltage	The magnitude of the test voltage shall be 2,500 volts rms at sea level.
RF High Potential Withstanding Voltage	The RF high potential withstanding voltage is 1,500 volts rms at 5 MHz. Leakage is not applicable.
RF Leakage	- (90 - f (GHz)) dB
Insertion Loss	(.05 SQT(f(GHz))) dB
MECHANICAL	
Connector Durability	TThe connector is to be tested and its mating connector shall be subjected to 500 insertion and withdrawal cycles at 12 cycles per minute max. The connector shall show no evidence of mechanical failure and the connector shall meet the mating characteristic requirements.
Cable Retention Force	75 pounds (333.6 N) min.
Coupling Nut Retention Force	Not applicable for Female connectors. For male connectors, the axial force is 100 lbs (445 N) max.. The torque is 30 inch-pounds (3.4 Nm) max.
Force to Engage and Disengage	The torque required to engage and disengage shall not exceed 6 inch-pounds (0.678 Nm).
Longitudinal Force max.	Longitudinal force is not applicable.
Mating Characteristics	See interface dimensions shown on next page. Applicable to Females only: oversize pin .067 inch (1.7 mm) max. dia. pin; .125 inch (3.2 mm) deep; insertion force 2 lbs. (8.9 N) max. with .066 inch (1.67 mm) min. dia. pin; withdrawal force 1.00 oz (.278 N) min. with .0645 inch (1.64 mm) max. dia. pin.
Recommended Mating Torque	12 - 15 inch-pounds (1.4 - 1.7 Nm)
ENVIRONMENTAL	
Corrosion (Salt Spray)	Specification MIL-STD-202, Method 101, Test Condition B. The salt solution shall be 5%.
Vibration	Specification MIL-STD-202, Method 204, Test Condition B.
Shock	Specification MIL-STD-202, Method 213, Test Condition I.
Thermal Shock	Specification MIL-STD-202, Method 107, Test Condition B, except high temperature shall be +70°C when the regular Bead is used, +170° when the high temperature Bead is used, and +200°C when TFE Fluorocarbon or Borium Nitrite Dielectric are used.
Moisture Resistance	Specification MIL-STD-202, Method 106. Step 7b (vibration) shall be omitted. Insulation resistance shall be 200 megohms min. within 5 minutes of removal from humidity.
Corona Level	The connector shall not exhibit breakdown (corona) when the applied voltage is 500 volts rms and the altitude is 70,000 feet.

Dimensions shown are Inches over Millimeters or vice versa. Standard units have stainless finish (last 2 digits of the P/N are -02). Interfaces are per DIN 47 223, DIN 47 226, IEC 169-4, IEC 169-7, IEC 169-8, IEC 457-2, IEC 60169-5, IEEE 287, MIL-PRF-39012, MIL DTL-24044, MIL DTL-3643,MIL-STD-348B, where applicable

Spectrum Elektrotechnik GmbH
Germany
www.spectrum-et.com
sales@spectrum-et.com
Phone: +49 / 89 / 35 48 04 0
Fax: +49 / 89 / 35 48 04 90

Interface Mating Dimensions N Metric Thread

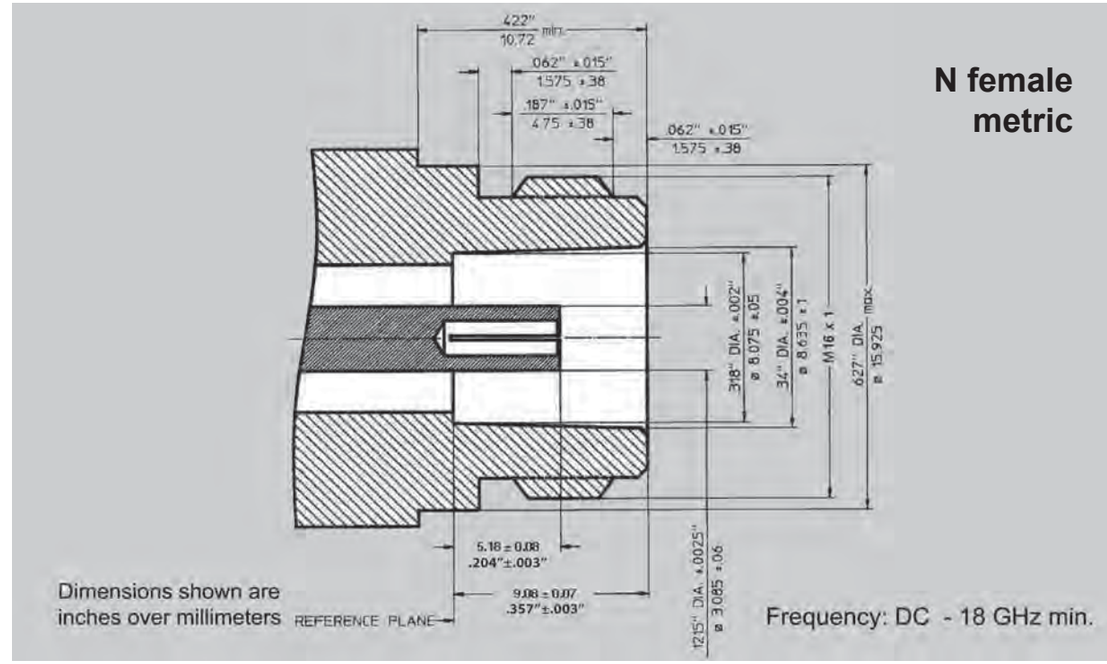

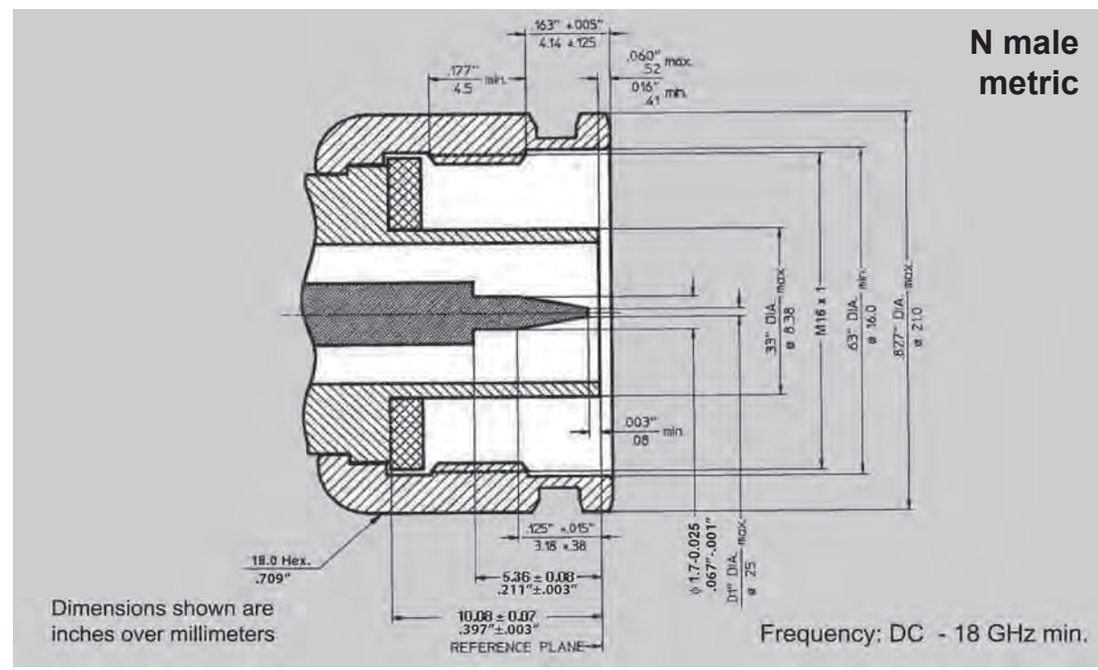

Dimensions shown are Inches over Millimeters or vice versa. Standard units have stainless finish (last 2 digits of the P/N are -02). Interfaces are per DIN 47 223, DIN 47 226, IEC 169-4, IEC 169-7, IEC 169-8, IEC 457-2, IEC 60169-5, IEEE 287, MIL-PRF-39012, MIL DTL-24044, MIL DTL-3643,MIL-STD-348B, where applicable

Spectrum Elektrotechnik GmbH
Germany
www.spectrum-et.com
sales@spectrum-et.com
Phone: +49 / 89 / 35 48 04 0
Fax: +49 / 89 / 35 48 04 90

Between-Series Adapters with N-Metric to N

Part - No.	8001-5M51-02
Connectors	N-metric male to N-male
Frequency	DC - 18.0 GHz
VSWR max.	1.03 + 0.005 x f(GHz)

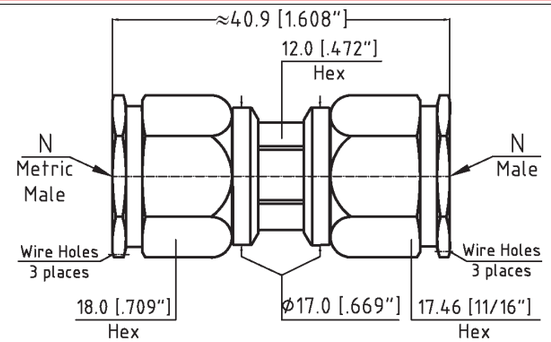

Part - No.	8001-5M61-02
Connectors	N-metric male to N-fem.
Frequency	DC - 18.0 GHz
VSWR max.	1.03 + 0.005 x f(GHz)

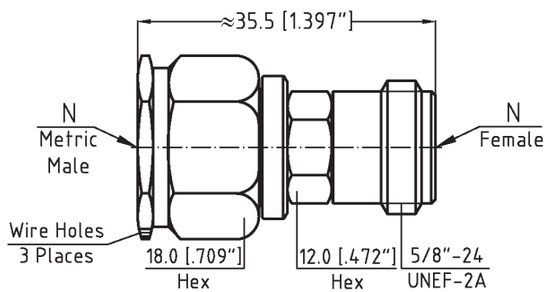

Part - No.	800V-5M61-02
Connectors	N-metric male to N-male
Frequency	DC - 18.0 GHz
VSWR max.	1.03 + 0.005 x f(GHz)

Unit has venting holes

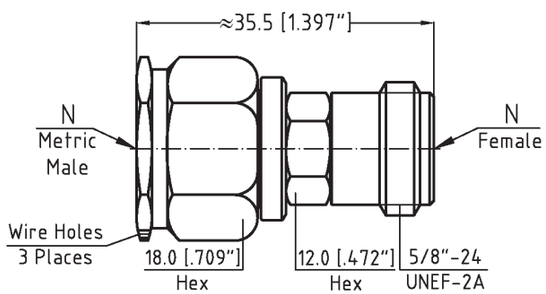

Part - No.	8001-516F-02
Connectors	N-metric female to N-male
Frequency	DC - 18.0 GHz
VSWR max.	1.03 + 0.005 x f(GHz)

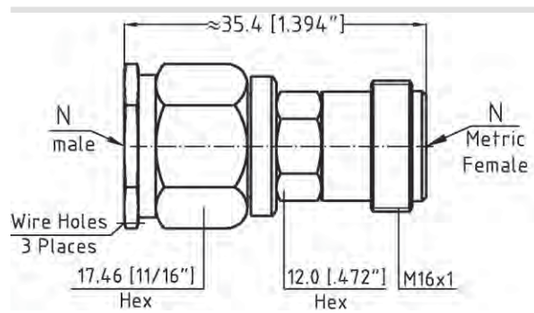

Dimensions shown are Inches over Millimeters or vice versa. Standard units have stainless finish (last 2 digits of the P/N are -02). Interfaces are per DIN 47 223, DIN 47 226, IEC 169-4, IEC 169-7, IEC 169-8, IEC 457-2, IEC 60169-5, IEEE 287, MIL-PRF-39012, MIL DTL-24044, MIL DTL-3643,MIL-STD-348B, where applicable

Spectrum Elektrotechnik GmbH
Germany
www.spectrum-et.com
sales@spectrum-et.com
Phone: +49 / 89 / 35 48 04 0
Fax: +49 / 89 / 35 48 04 90

Adapters with N-Metric to N and to 3.5mm

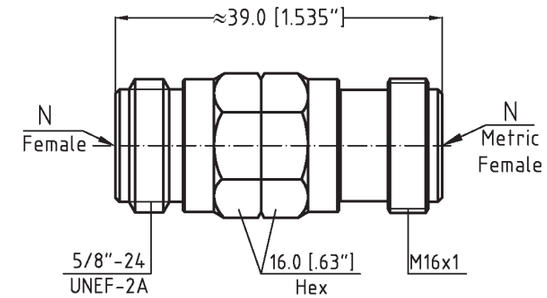

Part - No.	8001-6F61-02
Connectors	N-metric fem. to N-fem.
Frequency	DC - 18.0 GHz
VSWR max.	1.03 + 0.005 x f(GHz)

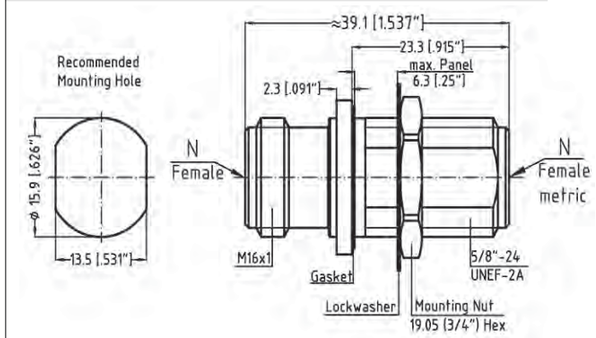

Part - No.	8002-6F61-02
Connectors	N-metric fem. to N-fem.
Frequency	DC - 18.0 GHz
VSWR max.	1.03 + 0.005 x f(GHz)

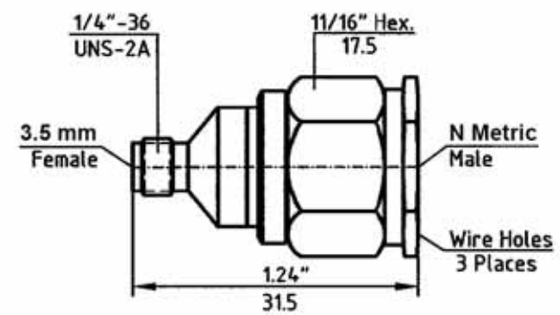

Part - No.	8001-5M92-02
Connectors	N-metric male to 3.5mm-f
Frequency	DC - 18.0 GHz
VSWR max.	1.03 + 0.005 x f(GHz)

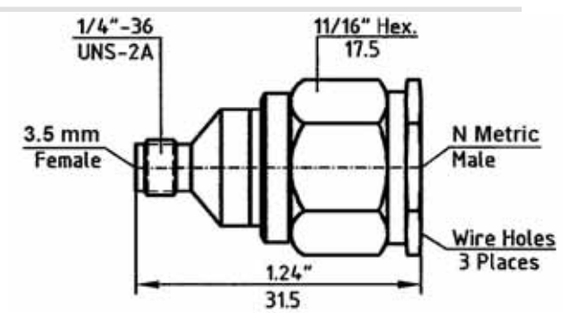

Part - No.	8U01-5M92-02
Connectors	N-metric male to 3.5mm-f
Frequency	DC - 18.0 GHz
VSWR max.	1.03 + 0.005 x f(GHz)

Higher temperature applications

Dimensions shown are Inches over Millimeters or vice versa. Standard units have stainless finish (last 2 digits of the P/N are -02). Interfaces are per DIN 47 223, DIN 47 226, IEC 169-4, IEC 169-7, IEC 169-8, IEC 457-2, IEC 60169-5, IEEE 287, MIL-PRF-39012, MIL DTL-24044, MIL DTL-3643,MIL-STD-348B, where applicable

Spectrum Elektrotechnik GmbH
Germany
www.spectrum-et.com
sales@spectrum-et.com
Phone: +49 / 89 / 35 48 04 0
Fax: +49 / 89 / 35 48 04 90

Adapters with N-Metric to SMA

Spectrum Elektrotechnik GmbH

Part - No.	8002-216F-02
Connectors	N-metric fem. to SMA-fem.
Frequency	DC - 18.0 GHz
VSWR max.	1.03 + 0.005 x f(GHz)

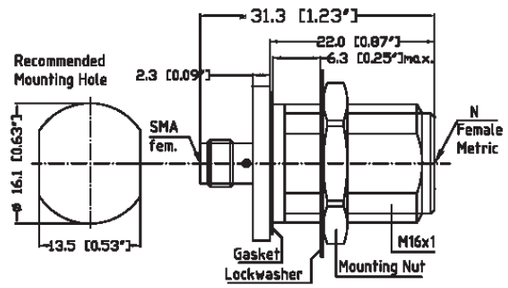

Dimensions shown are Inches over Millimeters or vice versa. Standard units have stainless finish (last 2 digits of the P/N are -02). Interfaces are per DIN 47 223, DIN 47 226, IEC 169-4, IEC 169-7, IEC 169-8, IEC 457-2, IEC 60169-5, IEC 60169-5, IEEE 287, MIL-PRF-39012, MIL DTL-24044, MIL DTL-3643,MIL-STD-348B, where applicable

Spectrum Elektrotechnik GmbH
Germany
www.spectrum-et.com
sales@spectrum-et.com
Phone: +49 / 89 / 35 48 04 0
Fax: +49 / 89 / 35 48 04 90

SMA-Metric Thread Specifications

The specifications below are general specifications for all SMA connectors. Specific Data for VSWR, Insertion Loss, R.F. leakage, etc., are available from the factory upon request. Specifications in the following table are recommended for any procurement documents or drawings. In the event of any conflict between these specifications and General Specifications MIL-PRF-39012, these specifications shall govern. These specifications are subject to change according to the latest revision.

REQUIREMENT	GENERAL SPECIFICATIONS
Standard Materials	STEEL corrosion resistant 1.4305 per DIN EN 10088; ASTM-A582 (303), or 1.4404 (316L) respectively. ALUMINUM AlMg4.5Mn per DIN DIN EN 1706, AlMgSi0.5 per DIN EN 1706, AlMgSi1 per DIN EN 1706 (6061-T6 per QQ-A-225/8). BRASS CuZn39Pb3 per DIN 17660 (QQ-B-626 (ASTM-B124), half hard). COPPER BERYLLIUM 33-25 CuBe2PbH per DIN17666(DIN CEN/TS;DIN SPEC 9700)(QQ-C530). TFE Fluorocarbon per DIN 52900 (ASTM-D-1710) SILICONE RUBBER per DIN ISO 3601)(A-A-59588,Class IIB) Gr. 50 - 75. BORIUM NITRITE Dielectric for high power applications per in-house specification
Finish for COPPER BERYLLIUM STAINLESS STEEL ALUMINUM BRASS VARIOUS	Center Contacts shall be gold plated to a minimum thickness of .00005-inch in accordance with ASTM-B-488, Type III, Code C, Class 1.25 shall be passivated per ASTM-A967 Conductive Parts shall have an iridited finish per MIL-DTL-5541 Other parts, such as Coupling Nuts and Back-Bodies shall be anodized per MIL-A-8625. .00003 inch (0.8 µm) min. gold plating per MIL-DTL-45204, or nickel plating per QQ-N-290, as specified. Imoloy .0001 inch (2.5 µm) min. plating, consisting of 55% Copper / 20% Zinc / 25% Tin (on special request).
Design	The design shall be such that the outline dimensions in this catalog are met. In addition, the assembled connector shall meet the interface dimensions.
ELECTRICAL	
Frequency Range Insulation Resistance Voltage Standing Wave Ratio (VSWR) Contact Resistance Dielectric Withstanding Voltage RF High Potential Withstanding Voltage RF Leakage Insertion Loss	DC - 18.0 GHz min. The insulation resistance shall not be less than 5,000 megohms. 1.06 + .005 * f (GHz) The center contact resistance drop shall not exceed 3.0 milliohms and the outer contact resistance drop shall not exceed 2.0 milliohms. The magnitude of the test voltage shall be 1,000 volts rms at sea level. The RF high potential withstanding voltage is 760 volts rms at 5 MHz. Leakage is not applicable. - (90 - f (GHz)) dB (.05 SQT(f(GHz))) dB
MECHANICAL	
Connector Durability Cable Retention Force Coupling Nut Retention Force Force to Engage and Disengage Longitudinal Force max. Mating Characteristics Recommended Mating Torque	The connector is to be tested and its mating connector shall be subjected to 500 insertions and withdrawal cycles at 12 cycles per minute max. The connector shall show no evidence of mechanical failure and the connector shall meet the mating characteristic requirements. 60 pounds (267 N) min. Not applicable for Female connectors. For male connectors, the axial force is 100 lbs (445 N) max.. The torque is 15 inch-pounds (1.7 Nm) max. The torque required to engage and disengage shall not exceed 2 inch-pounds (0.226 Nm). Longitudinal force is not applicable. See interface dimensions shown on next page. Applicable to Females only: oversize pin .0376 inch (.955 mm) max. dia. pin; .045 inch (1.14 mm) deep; insertion force 3 lbs. (13.34 N) max. with .037 inch (.94 mm) min. dia. pin; withdrawal force 1.00 oz (.278 N) min. with .0355 inch (.90 mm) max. dia. pin. 7 - 10 inch-pounds (0.8 - 1.13 Nm)
ENVIRONMENTAL	
Corrosion (Salt Spray) Vibration Shock Thermal Shock Moisture Resistance Corona Level	Specification MIL-STD-202, Method 101, Test Condition B. The salt solution shall be 5%. Specification MIL-STD-202, Method 204, Test Condition D. Specification MIL-STD-202, Method 213, Test Condition I. Specification MIL-STD-202, Method 107, Test Condition B, except high temperature shall be + 200°C. Specification MIL-STD-202, Method 106. Step 7b (vibration) shall be omitted. Insulation resistance shall be 200 megohms min. within 5 minutes of removal from humidity. The connector shall not exhibit breakdown (corona) when the applied voltage is 375 volts rms and the altitude is 70,000 feet.

Dimensions shown are Inches over Millimeters or vice versa. Standard units have stainless finish (last 2 digits of the P/N are -02). Interfaces are per DIN 47 223, DIN 47 226, IEC 169-4, IEC 169-7, IEC 169-8, IEC 457-2, IEC 60169-5, IEEE 287, MIL-PRF-39012, MIL DTL-24044, MIL DTL-3643,MIL-STD-348B, where applicable

Spectrum Elektrotechnik GmbH
Germany
www.spectrum-et.com
sales@spectrum-et.com
Phone: +49 / 89 / 35 48 04 0
Fax: +49 / 89 / 35 48 04 90

Interface Mating Dimensions SMA Metric Thread

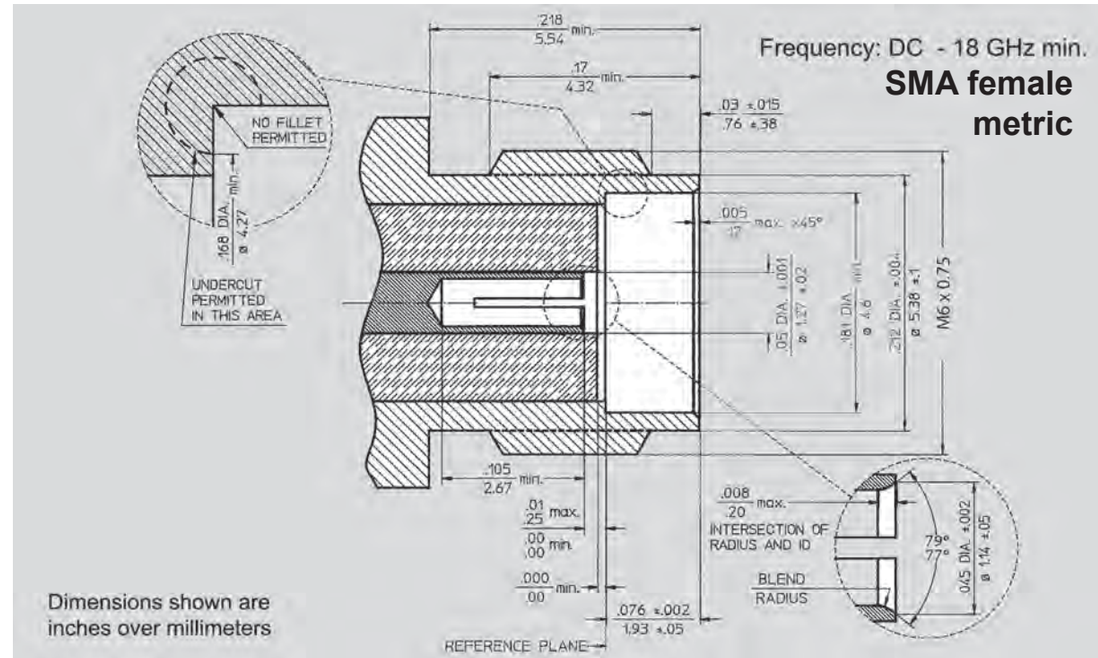

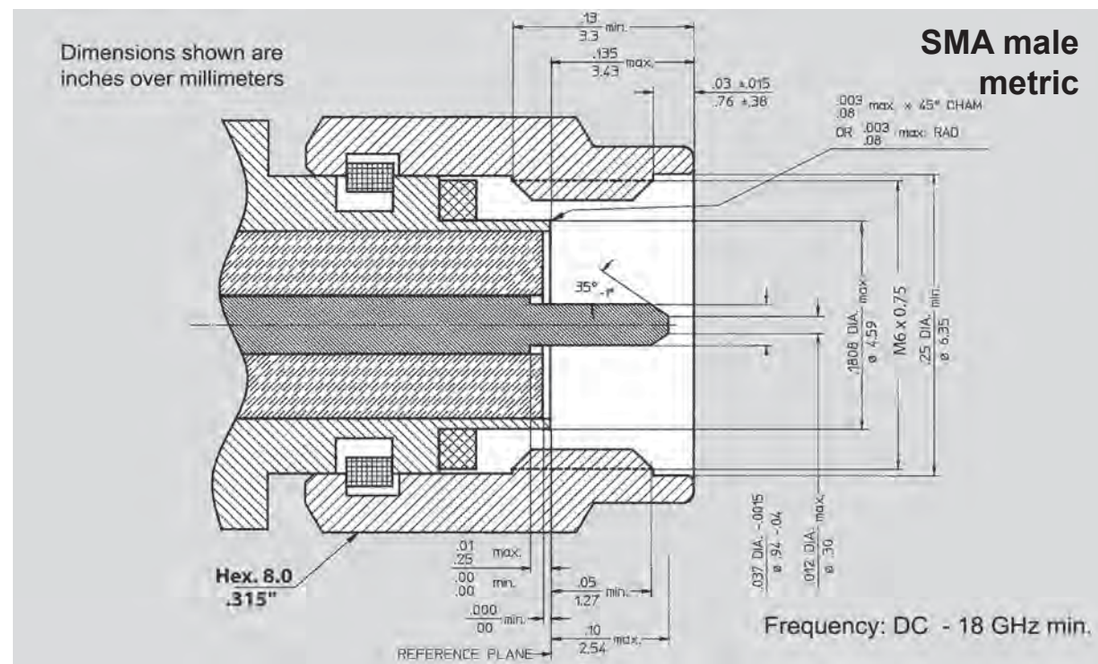

Dimensions shown are Inches over Millimeters or vice versa. Standard units have stainless finish (last 2 digits of the P/N are -02). Interfaces are per DIN 47 223, DIN 47 226, IEC 169-4, IEC 169-7, IEC 169-8, IEC 457-2, IEC 60169-5, IEEE 287, MIL-PRF-39012, MIL DTL-24044, MIL DTL-3643,MIL-STD-348B, where applicable

Spectrum Elektrotechnik GmbH
Germany
www.spectrum-et.com
sales@spectrum-et.com
Phone: +49 / 89 / 35 48 04 0
Fax: +49 / 89 / 35 48 04 90

Part - No.	8001-1M21-02
Connectors	SMA Metric-m to SMA-fem
Frequency	DC - 18.0 GHz
VSWR max.	1.03 + 0.005 x f (GHz)

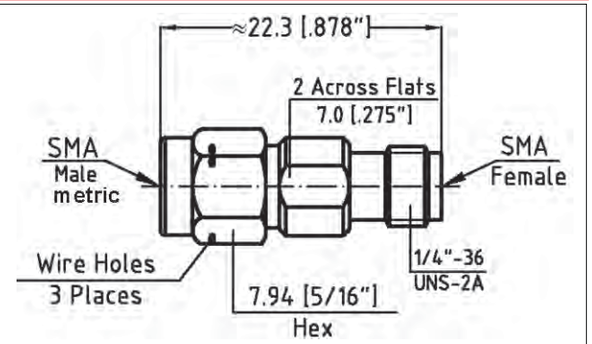

Part - No.	8001-112F-02
Connectors	SMA Metric-f to SMA-male
Frequency	DC - 18.0 GHz
VSWR max.	1.03 + 0.005 x f (GHz)

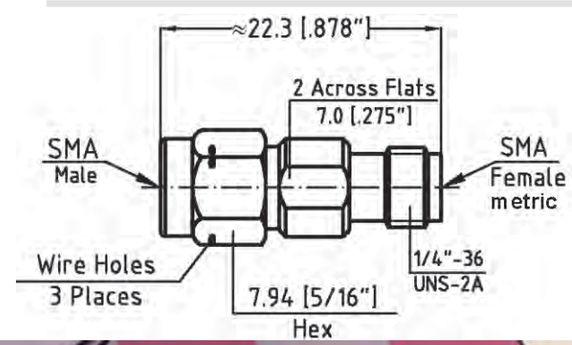

Dimensions shown are Inches over Millimeters or vice versa. Standard units have stainless finish (last 2 digits of the P/N are -02). Interfaces are per DIN 47 223, DIN 47 226, IEC 169-4, IEC 169-7, IEC 169-8, IEC 457-2, IEC 60169-5, IEEE 287, MIL-PRF-39012, MIL DTL-24044, MIL DTL-3643,MIL-STD-348B, where applicable

Spectrum Elektrotechnik GmbH
Germany
www.spectrum-et.com
sales@spectrum-et.com
Phone: +49 / 89 / 35 48 04 0
Fax: +49 / 89 / 35 48 04 90

A number of standard Adapter sets are shown in this section, please refer to the Table below to determine other possible locations. Should you not find your adapter listed in any section, please consult the factory or your Spectrum Elektrotechnik Area Representative.

Adapters Sets	Section	Page
Overview	BB	1
Standard Adapter Sets		2

How to order your Personal Set:
Please use the temporary P/N: SET-PERS, and specify all the Adapters you want to include in your Set. When ordering we will assign a special P/N identifying your complete complied Set. The pristine box will also show besides the part number your name plate.

Dimensions shown are Inches over Millimeters or vice versa. Standard units have stainless finish (last 2 digits of the P/N are -02). Interfaces are per DIN 47 223, DIN 47 226, IEC 169-4, IEC 169-7, IEC 169-8, IEC 457-2, IEC 60169-5, IEEE 287, MIL-PRF-39012, MIL DTL-24044, MIL DTL-3643,MIL-STD-348B, where applicable

Spectrum Elektrotechnik GmbH
Germany
www.spectrum-et.com
sales@spectrum-et.com
Phone: +49 / 89 / 35 48 04 0
Fax: +49 / 89 / 35 48 04 90

B
B

Spectrum Elektrotechnik GmbH offers a standard range of precision adapter sets. Each set comprises a commonly used grouping of series and inter-series adapters. Each adapter within any set is 100% tested, and ensures low reflection and optimum phase performance over its full frequency range. To enable the user to maintain these quality adapters in pristine condition, they are supplied in a nicely finished wooden case. Customers can also specify adapters for their own custom compiled sets. For details please call your Spectrum Representative.

Between Series Kit 7mm, consisting of the following Precision Adapters:		SET7-MINI-S1
1 Adapter straight	7 mm to 2.4 mm-female:	P/N 8001-HF90-02
1 Adapter straight	7 mm to 2.4 mm-male:	P/N 8001-HM90-02
1 Adapter straight	7 mm to 2.92 mm-female:	P/N 8001-KF90-02
1 Adapter straight	7 mm to 2.92 mm -male:	P/N 8001-KM90-02
1 Adapter straight	7 mm to 3.5-female:	P/N 8001-9092-02
1 Adapter straight	7 mm to 3.5-male:	P/N 8001-9091-02
1 Adapter straight	7 mm to SMA-female:	P/N 8001-2190-02
1 Adapter straight	7 mm to SMA-male:	P/N 8001-1190-02

Between Series Kit 7mm, consisting of the following Precision Adapters:		SET7-MINI-S2
2 Adapter straight	7 mm to 3.5-female:	P/N 8003-9092-02
2 Adapter straight	7 mm to 3.5-male:	P/N 8003-9091-02
2 Adapter straight	7 mm to SMA-female:	P/N 8001-2190-02
2 Adapter straight	7 mm to SMA-male:	P/N 8001-1190-02

Between Series Kit 7mm, consisting of the following Precision Adapters:		SET7-TNCN-S1
2 Adapter straight	7 mm to TNC-female:	P/N 8002-4190-02
2 Adapter straight	7 mm to TNC-male:	P/N 8002-3190-02
2 Adapter straight	7 mm to N-female:	P/N 8001-6190-02
2 Adapter straight	7 mm to N-male:	P/N 8001-5190-02

Between Series Kit 7mm, consisting of the following Precision Adapters:		SET7-UNIV-S1
1 Adapter straight	7 mm to 3.5 mm-female:	P/N 8001-9092-02
1 Adapter straight	7 mm to 3.5 mm-male:	P/N 8001-9091-02
1 Adapter straight	7 mm to SMA-female:	P/N 8001-2190-02
1 Adapter straight	7 mm to SMA -male:	P/N 8001-1190-02
1 Adapter straight	7 mm to TNC-female:	P/N 8002-4190-02
1 Adapter straight	7 mm to TNC-male:	P/N 8002-3190-02
1 Adapter straight	7 mm to N-female:	P/N 8001-6190-02
1 Adapter straight	7 mm to N-male:	P/N 8001-5190-02

Between Series Kit N-TNC, consisting of the following Precision Adapters:		SETN-TTNC-S1
2 Adapter straight	N-Female to TNC fem.:	P/N 8001-4161-02
2 Adapter straight	N-Female to TNC male:	P/N 8001-3161-02
2 Adapter straight	N-Male to TNC female:	P/N 8001-4151-02
2 Adapter straight	N-Male to TNC male:	P/N 8001-3151-02

Between Series Kit TNC-SMA, consisting of the following Precision Adapters:		SETT-TSMA-S1
2 Adapter straight	TNC Fem. to SMA-fem.:	P/N 8001-2141-02
2 Adapter straight	TNC Fem. to SMA-male:	P/N 8001-1141-02
2 Adapter straight	TNC Male to SMA-fem.:	P/N 8001-2131-02
2 Adapter straight	TNC Male to SMA-male:	P/N 8001-1131-02

Between Series Kit Type N, consisting of the following Precision Adapters:		SETN-MINI-S1
1 Adapter straight	N-fem. to 3.5 mm-fem.:	P/N 8002-6192-02
1 Adapter straight	N-fem. to 3.5 mm-male:	P/N 8002-6191-02
1 Adapter straight	N-male to 3.5 mm-fem.:	P/N 8002-5192-02
1 Adapter straight	N-male to 3.5 mm-male:	P/N 8002-5191-02
1 Adapter straight	N-female to SMA-fem.:	P/N 8001-2161-02
1 Adapter straight	N-female to SMA-male:	P/N 8001-1161-02
1 Adapter straight	N-male to SMA-fem.:	P/N 8002-2151-02
1 Adapter straight	N-male to SMA-male:	P/N 8002-1151-02

Between Series Kit BNC, consisting of the following Precision Adapters:		SETB-TSMA-S1
1 Adapter straight	BNC-fem. to SMA-fem.:	P/N 8001-2181-02
1 Adapter straight	BNC-fem. to SMA-male:	P/N 8001-1181-02
1 Adapter straight	BNC-male to SMA-fem.:	P/N 8001-2171-02
1 Adapter straight	BNC-male to SMA-male:	P/N 8001-1171-02

In-Series Kit Type SMA, consisting of the following Precision Adapters:		SETS-TSMA-S1
1 Adapter straight	SMA-fem. to SMA-fem.:	P/N 8001-2121-02
1 Adapter straight	SMA-fem. to SMA-male:	P/N 8001-1121-02
1 Adapter straight	SMA-male to SMA-male:	P/N 8001-1111-02
1 Adapter radius angle	SMA-fem. to SMA-fem.:	P/N 8091-2121-02
1 Adapter radius angle	SMA-fem. to SMA-male:	P/N 8091-1121-02
1 Adapter radius angle	SMA-male to SMA-male:	P/N 8091-1111-02

In-Series Kit, Type N, consisting of the following Precision Adapters:		SETN-TYPN-S1
2 Adapter straight	N-female to N-female:	P/N 8001-6161-02
2 Adapter straight	N-female to N-male:	P/N 8001-5161-02
2 Adapter straight	N-male to N-male:	P/N 8001-5151-02

In-Series Kit Type TNC, consisting of the following Precision Adapters:		SETT-TTNC-S1
2 Adapter straight	TNC-fem. to TNC fem.:	P/N 8001-4141-02
2 Adapter straight	TNC-fem. to TNC male:	P/N 8001-3141-02
2 Adapter straight	TNC-male to TNC male:	P/N 8001-3131-02

How to order your Personal Set:

Please use the temporary P/N: SET-PERS, and specify all the Adapters you want to include in your Set. The individual Kit will be showing your name plate, identifying your own compiled Set.

Dimensions shown are Inches over Millimeters or vice versa. Standard units have stainless finish (last 2 digits of the P/N are -02). Interfaces are per DIN 47 223, DIN 47 226, IEC 169-4, IEC 169-7, IEC 169-8, IEC 457-2, IEC 60169-5, IEEE 287, MIL-PRF-39012, MIL DTL-24044, MIL DTL-3643,MIL-STD-348B, where applicable

Spectrum Elektrotechnik GmbH
Germany
www.spectrum-et.com
sales@spectrum-et.com
Phone: +49 / 89 / 35 48 04 0
Fax: +49 / 89 / 35 48 04 90

B
B

Customers may specify Adapters for their own custom compiled sets, to be delivered in pristine boxes.

A number of standard Adapter Sets are available as well, as seen in the table to the left.

Dimensions shown are Inches over Millimeters or vice versa. Standard units have stainless finish (last 2 digits of the P/N are -02). Interfaces are per DIN 47 223, DIN 47 226, IEC 169-4, IEC 169-7, IEC 169-8, IEC 457-2, IEC 60169-5, IEEE 287, MIL-PRF-39012, MIL DTL-24044, MIL DTL-3643,MIL-STD-348B, where applicable

Spectrum Elektrotechnik GmbH
Germany
www.spectrum-et.com
sales@spectrum-et.com
Phone: +49 / 89 / 35 48 04 0
Fax: +49 / 89 / 35 48 04 90

B
B

C
C

In-Series and Between-Series NMD Adapters

If your choice of NMD Adapter is not shown in this section, please refer to the Table below to determine other possible locations. Should you not find your adapter listed in any section, please consult the factory or your Spectrum Elektrotechnik Area Representative.

NMD Adapters	Section	Page
NMD Overview	CC	*1*
1.85mmNMD to 1.85mm		*2*
2.4mm NMD to 2.4mm		*3*
Between Series 2.4mm NMD to 2.92mm & 3.5mm		*4*
Between Series 2.4mm NMD to 3.5mm and 7mm		*5*
Between Series 2.4mm NMD to N		*6*
Between Series 2.92mm NMD to 2.4mm &. 2.92mm		*7*
Between Series 2.92mm NMD to 2.92mm & 3.5mm		*8*
Between Series 2.92mm NMD to 7mm & N		*9*
Between Series 3.5mm NMD to 2.4mm & 2.92mm		*10*
Between Series 3.5mm NMD to 3.5mm		*11*
Between Series 3.5mm NMD to 3.5mm, 7mm & N		*12*
Between Series 3.5mm NMD to N		*13*
Between Series N NMD to 2.4mm & 3.5mm		*14*
Between Series N NMD to N		*15*

Although our catalog incorporates a very comprehensive range of products, due to our program of continuous development, there is no way that it will contain every product we manufacture. Please consult the factory for the product you require.
To improve our Standard Products we reserve the right to make changes. Specifications are therefore subject to change without notice.

CC

Part - No.	8001-V2VF-02
Connectors	1.85mm-NMD-f to 1.85mm-f
Frequency	DC - 65.0 GHz
VSWR	1.03 + 0.004 x f (GHz)

Direct ANA Connection

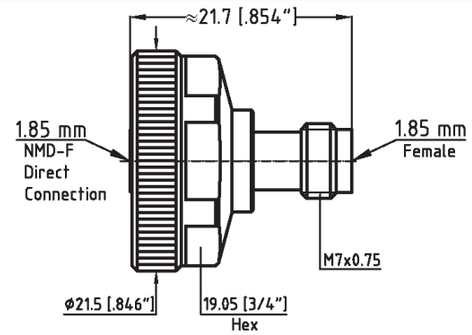

Part - No.	8001-V2VD-02
Connectors	1.85mm-NMD-f to 1.85mm-NMD-m
Frequency	DC - 65.0 GHz
VSWR	1.03 + 0.004 x f (GHz)

Direct ANA Connection

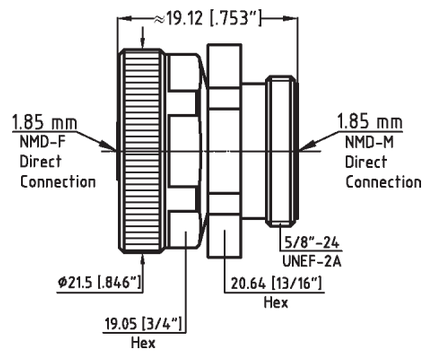

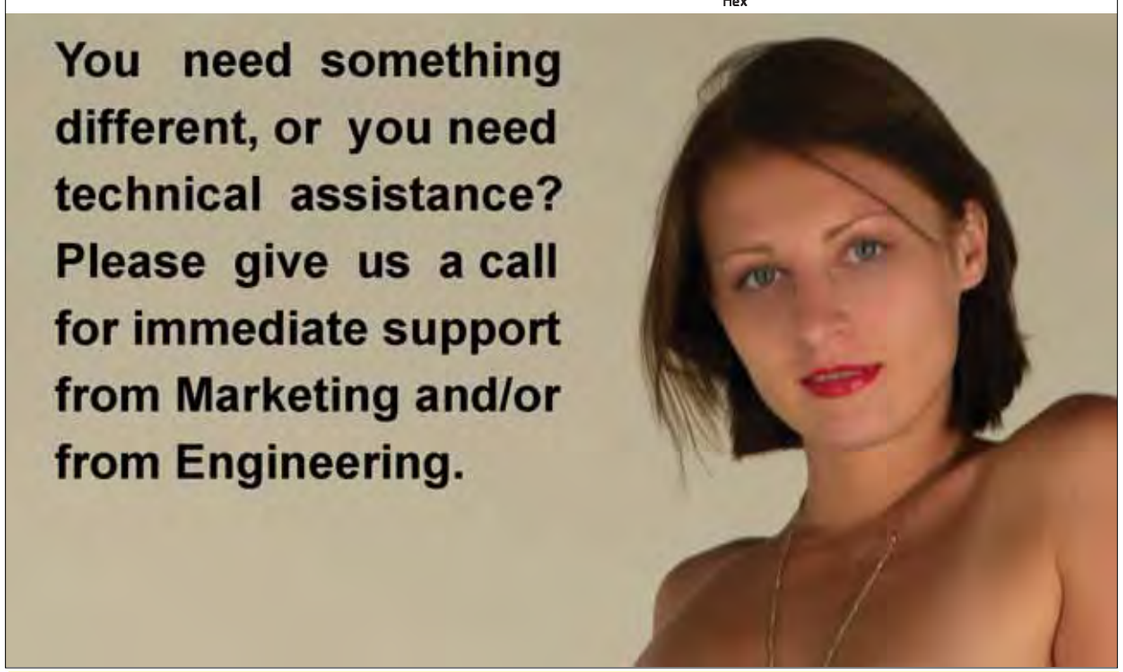

Dimensions shown are Inches over Millimeters or vice versa. Standard units have stainless finish (last 2 digits of the P/N are -02). Interfaces are per DIN 47 223, DIN 47 226, IEC 169-4, IEC 169-7, IEC 169-8, IEC 457-2, IEC 60169-5, IEEE 287, MIL-PRF-39012, MIL DTL-24044, MIL DTL-3643,MIL-STD-348B, where applicable

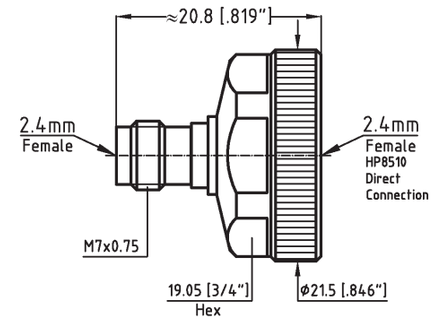

CC

Part - No.	8001-HFH2-02
Connectors	2.4mm-NMD-f to 2.4mm-f
Frequency	DC - 50.0 GHz
VSWR	1.03 + 0.004 x f (GHz)

Direct ANA Connection

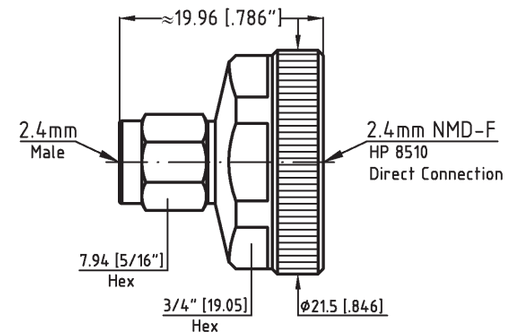

Part - No.	8001-HMH2-02
Connectors	2.4mm-NMD-f to 2.4mm-m
Frequency	DC - 50.0 GHz
VSWR	1.03 + 0.004 x f (GHz)

Direct ANA Connection

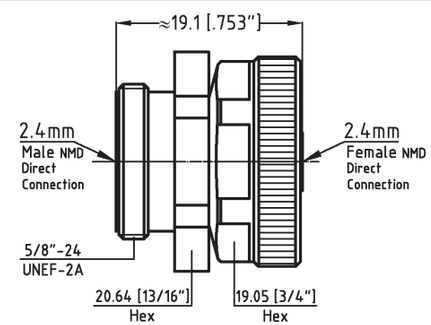

Part - No,	8001-H2HD-02
Connectors	2.4mm-NMD-f to 2.4mm-NMD-m
Frequency	DC - 50.0 GHz
VSWR	1.03 + 0.004 x f (GHz)

Direct ANA Connection

You do not find the Adapter you need for an application? You need technical support? You need price and delivery information? Please contact your nearest Spectrum Representative, or please contact us direct.

Telephone: +49-89-3548-040 Facsimile: +49-89-3548-0490
e-mail: sales@spectrum-et.com www.spectrum-et.com

Dimensions shown are Inches over Millimeters or vice versa. Standard units have stainless finish (last 2 digits of the P/N are -02). Interfaces are per DIN 47 223, DIN 47 226, IEC 169-4, IEC 169-7, IEC 169-8, IEC 457-2, IEC 60169-5, IEEE 287, MIL-PRF-39012, MIL DTL-24044, MIL DTL-3643,MIL-STD-348B, where applicable

Part - No.	8001-H2KD-02
Connectors	2.4mm-NMD-f to 2.92mm-NMD-m
Frequency	DC - 40.0 GHz
VSWR	1.03 + 0.004 x f (GHz)

Direct ANA Connection

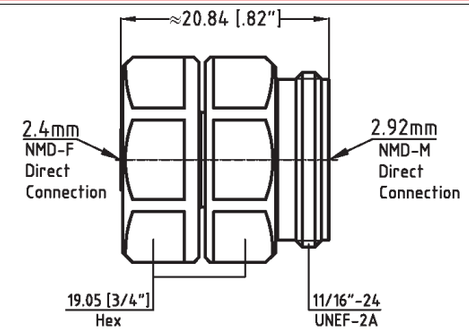

Part - No.	8001-H2KF-02
Connectors	2.4mm-NMD-f to 2.92mm-f
Frequency	DC - 40.0 GHz
VSWR	1.03 + 0.004 x f (GHz)

Direct ANA Connection

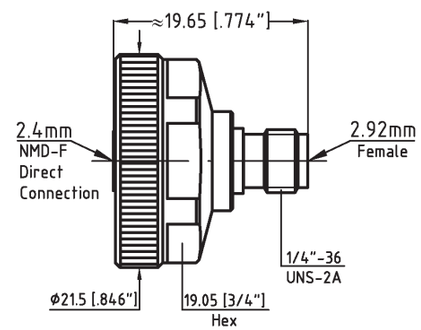

Part - No.	8001-H2KM-02
Connectors	2.4mm-NMD-f to 2.92mm-m
Frequency	DC - 40.0 GHz
VSWR	1.03 + 0.004 x f (GHz)

Direct ANA Connection

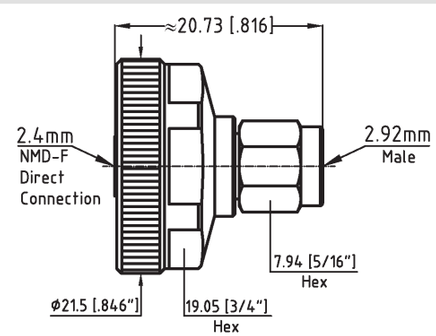

Part - No.	8001-H291-02
Connectors	2.4mm-NMD-f to 3.5mm-m
Frequency	DC - 35.0 GHz
VSWR	1.03 + 0.004 x f (GHz)

Direct ANA Connection

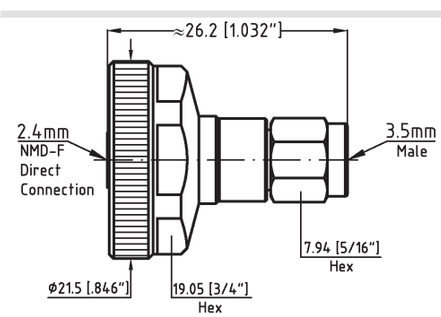

Dimensions shown are Inches over Millimeters or vice versa. Standard units have stainless finish (last 2 digits of the P/N are -02). Interfaces are per DIN 47 223, DIN 47 226, IEC 169-4, IEC 169-7, IEC 169-8, IEC 457-2, IEC 60169-5, IEEE 287, MIL-PRF-39012, MIL DTL-24044, MIL DTL-3643,MIL-STD-348B, where applicable

Spectrum Elektrotechnik GmbH
Germany
www.spectrum-et.com
sales@spectrum-et.com
Phone: +49 / 89 / 35 48 04 0
Fax: +49 / 89 / 35 48 04 90

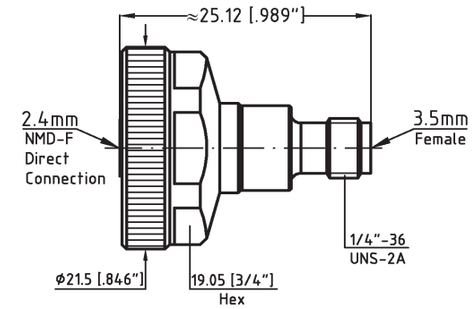

Part - No.	8001-H292-02
Connectors	2.4mm-NMD-f to 3.5mm-f
Frequency	DC - 26.5 GHz
VSWR	1.03 + 0.004 x f (GHz)

Direct ANA Connection

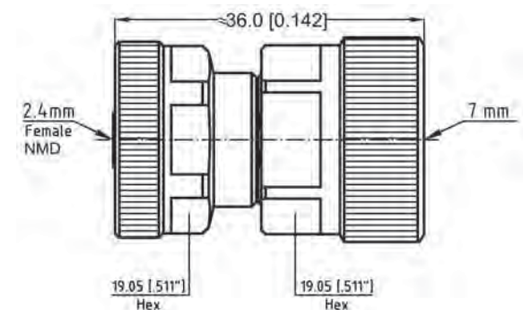

Part - No.	8001-H290-02
Connectors	2.4mm-NMD-f to 7 mm
Frequency	DC - 18.0 GHz
VSWR	1.03 + 0.004 x f (GHz)

The Center Conductor of the 7 mm Connector is supplied with 4 slots. If you require 6 slots, Part Number changes to: **8001 - H296 - 02**

Direct ANA Connection

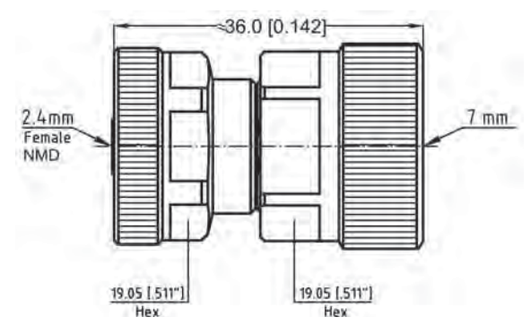

Part - No.	8001-H296-02
Connectors	2.4mm-NMD-f to 7 mm
Frequency	DC - 18.0 GHz
VSWR	1.03 + 0.004 x f (GHz)

The 7mm connector uses a 6-slotted contact

Direct ANA Connection

You do not find the Adapter you need for an application? You need technical support? You need price and delivery information? Please contact your nearest Spectrum Representative, or please contact us direct.

Telephone: +49-89-3548-040 Facsimile: +49-89-3548-0490
e-mail: sales@spectrum-et.com www.spectrum-et.com

Dimensions shown are Inches over Millimeters or vice versa. Standard units have stainless finish (last 2 digits of the P/N are -02). Interfaces are per DIN 47 223, DIN 47 226, IEC 169-4, IEC 169-7, IEC 169-8, IEC 457-2, IEC 60169-5, IEEE 287, MIL-PRF-39012, MIL DTL-24044, MIL DTL-3643,MIL-STD-348B, where applicable

Spectrum Elektrotechnik GmbH
Germany
www.spectrum-et.com
sales@spectrum-et.com
Phone: +49 / 89 / 35 48 04 0
Fax: +49 / 89 / 35 48 04 90

Part - No.	8001-H261-02
Connectors	2.4mm-NMD-f to N-f
Frequency	DC - 18.0 GHz
VSWR	1.03 + 0.005 x f (GHz)

Direct ANA Connection

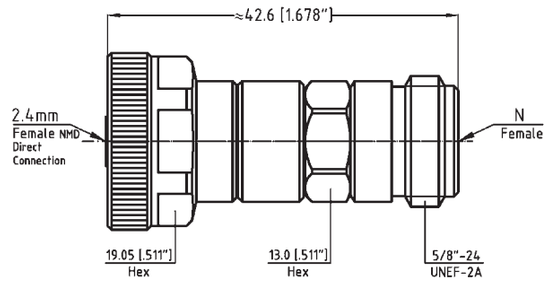

Part - No.	8U01-H261-02
Connectors	2.4mm-NMD-f to N-f
Frequency	DC - 18.0 GHz
VSWR	1.03 + 0.005 x f (GHz)

Higher Temperature Application

Direct ANA Connection

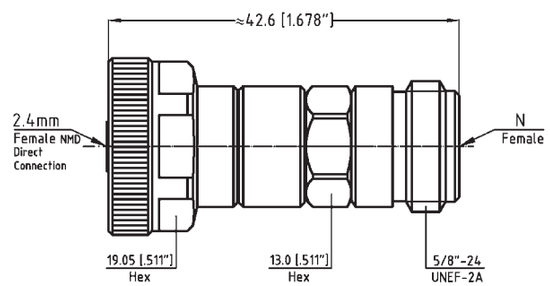

Part - No.	8001-H251-02
Connectors	2.4mm-NMD-f to N-m
Frequency	DC - 18.0 GHz
VSWR	1.03 + 0.005 x f (GHz)

Direct ANA Connection

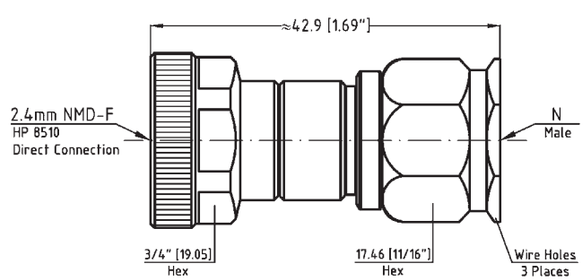

You do not find the Adapter you need for an application? You need technical support? You need price and delivery information? Please contact your nearest Spectrum Representative, or please contact us direct.

Telephone: +49-89-3548-040 Facsimile: +49-89-3548-0490
e-mail: sales@spectrum-et.com www.spectrum-et.com

Dimensions shown are Inches over Millimeters or vice versa. Standard units have stainless finish (last 2 digits of the P/N are -02). Interfaces are per DIN 47 223, DIN 47 226, IEC 169-4, IEC 169-7, IEC 169-8, IEC 457-2, IEC 60169-5, IEEE 287, MIL-PRF-39012, MIL DTL-24044, MIL DTL-3643,MIL-STD-348B, where applicable

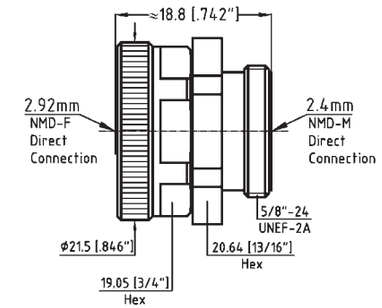

Part - No.	8001-HDWI-02
Connectors	2.92-NMD-f to 2.4mm-NMD-m
Frequency	DC - 40.0 GHz
VSWR	1.03 + 0.005 x f (GHz)

Direct ANA Connection

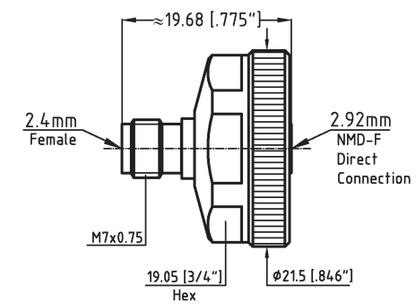

Part - No.	8001-HFWI-02
Connectors	2.92mm-NMD-f to 2.4mm-f
Frequency	DC - 40.0 GHz
VSWR	1.03 + 0.005 x f (GHz)

Direct ANA Connection

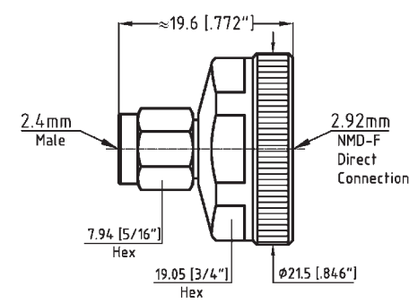

Part - No.	8001-HMWI-02
Connectors	2.92mm-NMD-f to 2.4mm-m
Frequency	DC - 40.0 GHz
VSWR	1.03 + 0.005 x f (GHz)

Direct ANA Connection

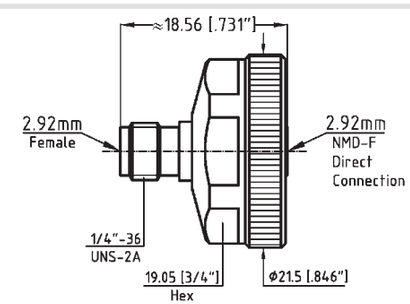

Part - No.	8001-KFWI-02
Connectors	2.92mm-NMD-f to 2.92mm-f
Frequency	DC - 40.0 GHz
VSWR	1.03 + 0.005 x f (GHz)

Direct ANA Connection

Dimensions shown are Inches over Millimeters or vice versa. Standard units have stainless finish (last 2 digits of the P/N are -02). Interfaces are per DIN 47 223, DIN 47 226, IEC 169-4, IEC 169-7, IEC 169-8, IEC 457-2, IEC 60169-5, IEEE 287, MIL-PRF-39012, MIL DTL-24044, MIL DTL-3643,MIL-STD-348B, where applicable

Part - No.	8002-KFKP-02
Connectors	2.92mm-NMD-m to 2.92mm-f
Frequency	DC - 40.0 GHz
VSWR	1.03 + 0.003 x f (GHz)

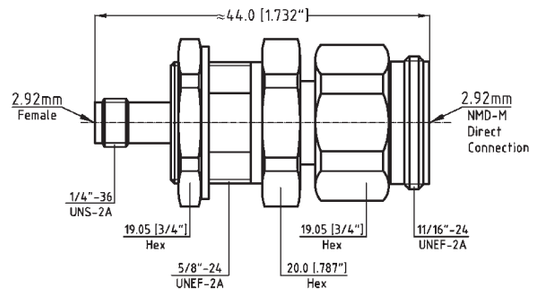

Part - No.	8001-KMWI-02
Connectors	2.92mm-NMD-f to 2.92mm-m
Frequency	DC - 40.0 GHz
VSWR	1.03 + 0.003 x f (GHz)

Direct ANA Connection

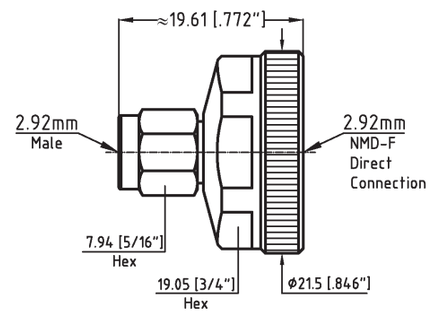

Part - No.	8001-WI92-02
Connectors	2.92mm-NMD-f to 3.5mm-f
Frequency	DC - 35.0 GHz
VSWR	1.03 + 0.003 x f (GHz)

Direct ANA Connection

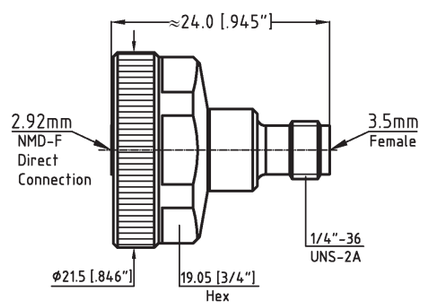

Part - No.	8001-WI91-02
Connectors	2.92mm-NMD-f to 3.5mm-m
Frequency	DC - 35.0 GHz
VSWR	1.03 + 0.003 x f (GHz)

Direct ANA Connection

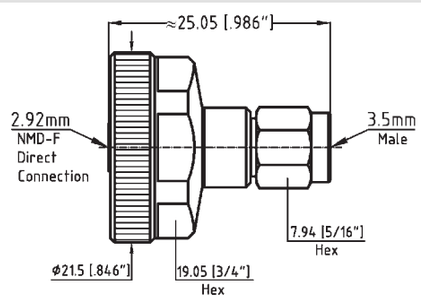

Dimensions shown are Inches over Millimeters or vice versa. Standard units have stainless finish (last 2 digits of the P/N are -02). Interfaces are per DIN 47 223, DIN 47 226, IEC 169-4, IEC 169-7, IEC 169-8, IEC 457-2, IEC 60169-5, IEEE 287, MIL-PRF-39012, MIL DTL-24044, MIL DTL-3643,MIL-STD-348B, where applicable

Spectrum Elektrotechnik GmbH
Germany
www.spectrum-et.com
sales@spectrum-et.com
Phone: +49 / 89 / 35 48 04 0
Fax: +49 / 89 / 35 48 04 90

Part - No.	8001-WI90-02
Connectors	2.92mm-NMD-f to 7mm
Frequency	DC - 18.0 GHz
VSWR	1.03 + 0.003 x f (GHz)

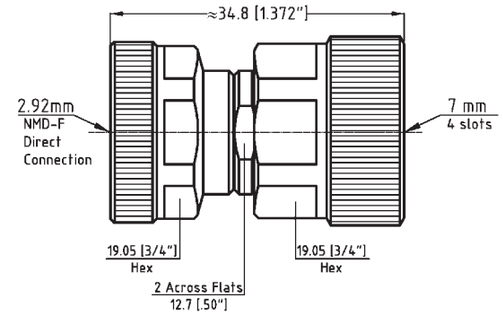

Direct ANA Connection

Part - No.	8U01-WI90-02
Connectors	2.92mm-NMD-f to 7mm
Frequency	DC - 18.0 GHz
VSWR	1.03 + 0.003 x f (GHz)

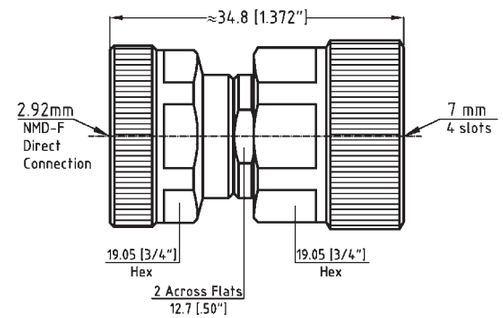

Higher Power Bead The Center Conductor of the 7 mm Connector is supplied with 4 slots. If you require 6 slots, Part Number changes to **8001-WI96 - 02**

Direct ANA Connection

Part - No.	8001-WI61-02
Connectors	2.92mm-NMD-f to N-f
Frequency	DC - 18.0 GHz
VSWR	1.03 + 0.005 x f (GHz)

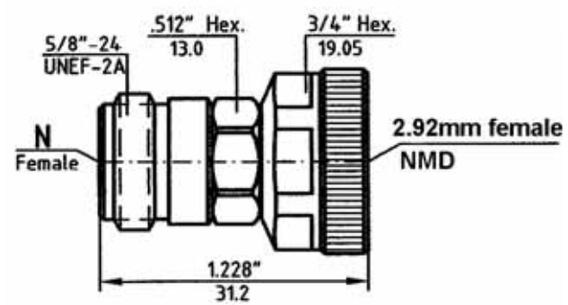

Direct ANA Connection

Part - No.	8001-WI51-02
Connectors	2.92mm-NMD-f to N-m
Frequency	DC - 18.0 GHz
VSWR	1.03 + 0.005 x f (GHz)

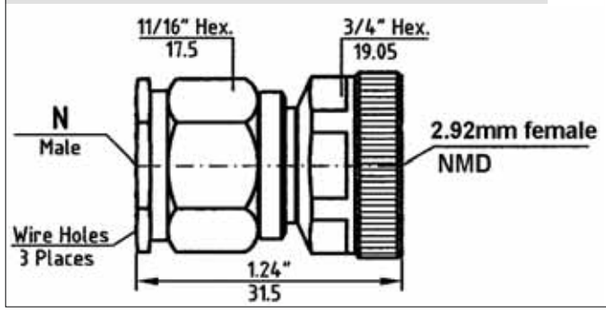

Direct ANA Connection

Dimensions shown are Inches over Millimeters or vice versa. Standard units have stainless finish (last 2 digits of the P/N are -02). Interfaces are per DIN 47 223, DIN 47 226, IEC 169-4, IEC 169-7, IEC 169-8, IEC 457-2, IEC 60169-5, IEEE 287, MIL-PRF-39012, MIL DTL-24044, MIL DTL-3643,MIL-STD-348B, where applicable

Spectrum Elektrotechnik GmbH
Germany
www.spectrum-et.com
sales@spectrum-et.com
Phone: +49 / 89 / 35 48 04 0
Fax: +49 / 89 / 35 48 04 90

Part - No.	8001-HFH3-02
Connectors	3.5mm-NMD-f to 2.4mm-f
Frequency	DC - 35.0 GHz
VSWR	1.03 + 0.003 x f (GHz)

Direct ANA Connection

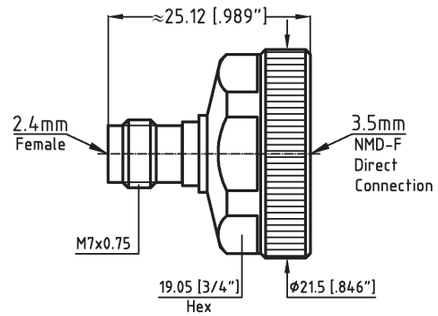

Part - No.	8001-HMH3-02
Connectors	3.5mm-NMD-f to 2.4mm-m
Frequency	DC - 35.0 GHz
VSWR	1.03 + 0.003 x f (GHz)

Direct ANA Connection

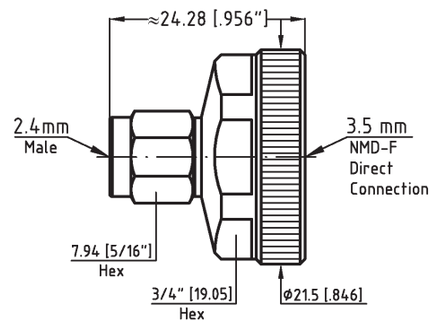

Part - No.	8001-H3KM-02
Connectors	3.5mm-NMD-f to 2.92mm-m
Frequency	DC - 35.0 GHz
VSWR	1.03 + 0.003 x f (GHz)

Direct ANA Connection

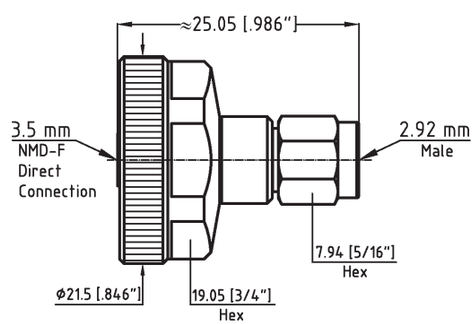

Part - No.	8001-H3KF-02
Connectors	3.5mm-NMD-f to 2.92mm-f
Frequency	DC - 35.0 GHz
VSWR	1.03 + 0.003 x f (GHz)

Direct ANA Connection

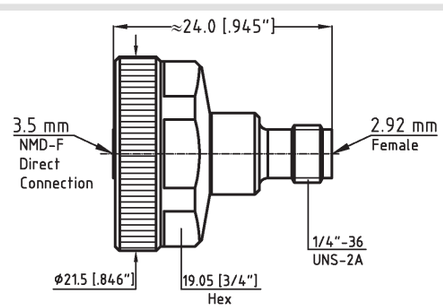

Dimensions shown are Inches over Millimeters or vice versa. Standard units have stainless finish (last 2 digits of the P/N are -02). Interfaces are per DIN 47 223, DIN 47 226, IEC 169-4, IEC 169-7, IEC 169-8, IEC 457-2, IEC 60169-5, IEEE 287, MIL-PRF-39012, MIL DTL-24044, MIL DTL-3643,MIL-STD-348B, where applicable

Spectrum Elektrotechnik GmbH
Germany
www.spectrum-et.com
sales@spectrum-et.com
Phone: +49 / 89 / 35 48 04 0
Fax: +49 / 89 / 35 48 04 90

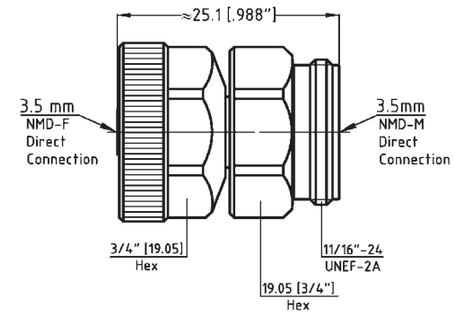

Part - No.	8001-H39D-02
Connectors	3.5mm-NMD-f to 3.5mm-NMD-m
Frequency	DC - 26.5 GHz
VSWR	1.03 + 0.003 x f (GHz)

Direct ANA Connection

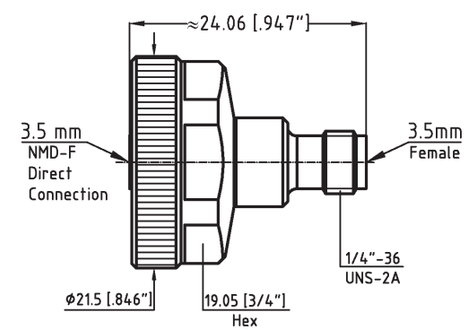

Part - No.	8001-H392-02
Connectors	3.5mm-NMD-f to 3.5mm-f
Frequency	DC - 26.5 GHz
VSWR	1.03 + 0.003 x f (GHz)

Direct ANA Connection

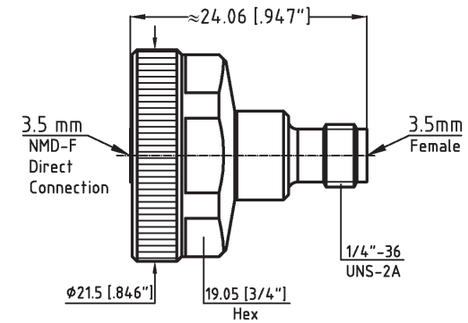

Part - No.	8002-H392-02
Connectors	3.5mm-NMD-f to 3.5mm-f
Frequency	DC - 35,0 GHz
VSWR	1.03 + 0.003 x f (GHz)

Direct ANA Connection

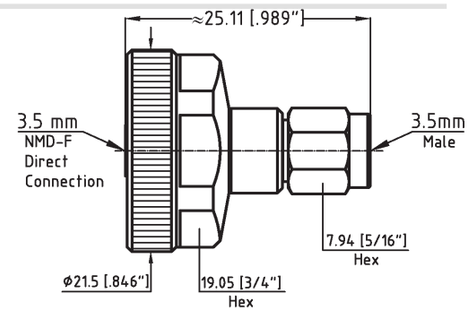

Part - No.	8001-H391-02
Connectors	3.5mm-NMD-f to 3.5mm-m
Frequency	DC - 26.5 GHz
VSWR	1.03 + 0.003 x f (GHz)

Direct ANA Connection

Dimensions shown are Inches over Millimeters or vice versa. Standard units have stainless finish (last 2 digits of the P/N are -02). Interfaces are per DIN 47 223, DIN 47 226, IEC 169-4, IEC 169-7, IEC 169-8, IEC 457-2, IEC 60169-5, IEEE 287, MIL-PRF-39012, MIL DTL-24044, MIL DTL-3643,MIL-STD-348B, where applicable

Spectrum Elektrotechnik GmbH
Germany
www.spectrum-et.com
sales@spectrum-et.com
Phone: +49 / 89 / 35 48 04 0
Fax: +49 / 89 / 35 48 04 90

C
C

Part - No.	8002-H391-02
Connectors	3.5mm-NMD-f to 3.5mm-m
Frequency	DC - 35.0 GHz
VSWR	1.03 + 0.003 x f (GHz)

Direct ANA Connection

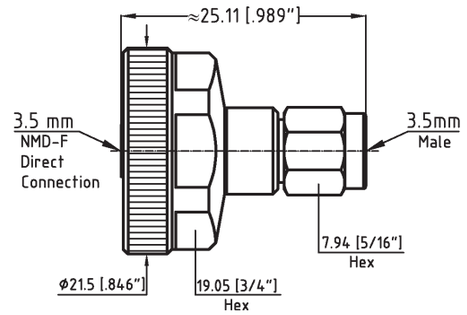

Part - No.	8001-H390-02
Connectors	3.5mm NMD-f to 7mm
Frequency	DC - 18.0 GHz
VSWR	1.03 + 0.003 x f (GHz)

The Center Conductor of the 7 mm Connector is supplied with 4 slots. If you require 6 slots, Part Number changes to: **8001 - H396 - 02**

Direct ANA Connection

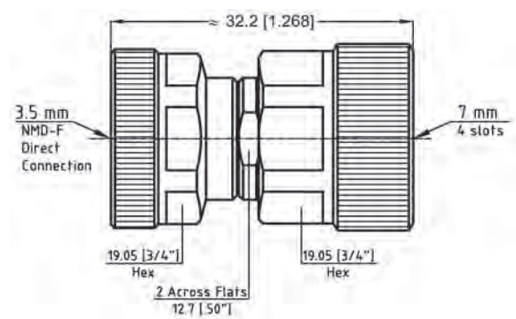

Part - No.	8001-H361-02
Connectors	3.5mm NMD-f to N-f
Frequency	DC - 18.0 GHz
VSWR	1.03 + 0.005 x f (GHz)

Direct ANA Connection

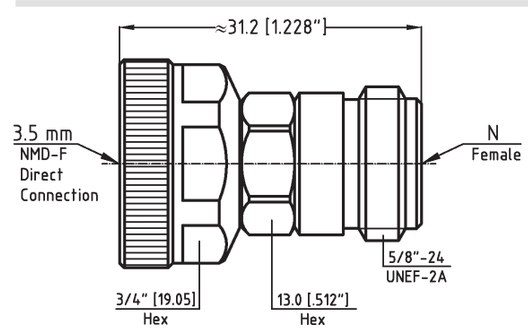

Part - No.	8U01-H361-02
Connectors	3.5mm NMD-f to N-f
Frequency	DC - 18.0 GHz
VSWR	1.03 + 0.005 x f (GHz)

Higher Temperature Application

Direct ANA Connection

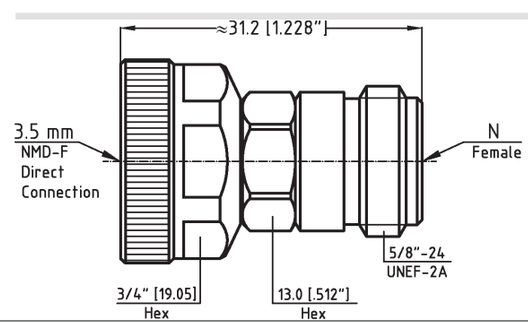

Dimensions shown are Inches over Millimeters or vice versa. Standard units have stainless finish (last 2 digits of the P/N are -02). Interfaces are per DIN 47 223, DIN 47 226, IEC 169-4, IEC 169-7, IEC 169-8, IEC 457-2, IEC 60169-5, IEEE 287, MIL-PRF-39012, MIL DTL-24044, MIL DTL-3643,MIL-STD-348B, where applicable

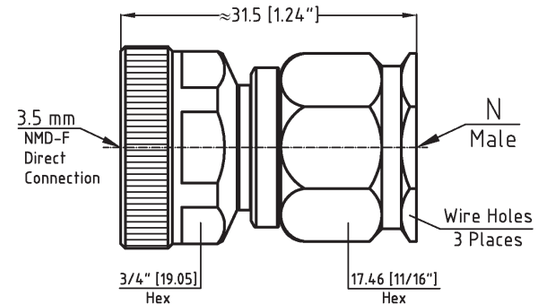

Part - No.	8001-H351-02
Connectors	3.5mm NMD-f to N-m
Frequency	DC - 18.0 GHz
VSWR	1.03 + 0.005 x f (GHz)

Direct ANA Connection

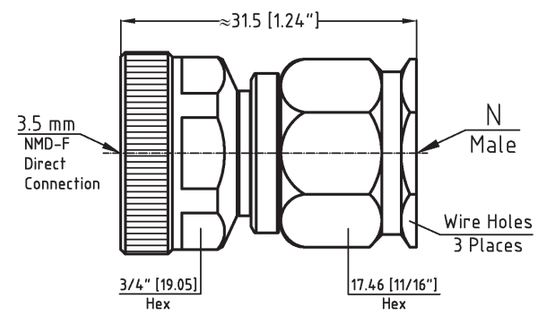

Part - No.	8U01-H351-02
Connectors	3.5mm NMD-f to N-m
Frequency	DC - 18.0 GHz
VSWR	1.03 + 0.005 x f (GHz)

Higher Temperature Application

Direct ANA Connection

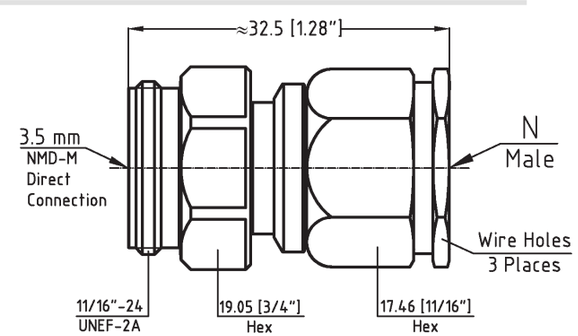

Part - No.	8001-H3M5-02
Connectors	3.5mm NMD-m to N-m
Frequency	DC - 18.0 GHz
VSWR	1.03 + 0.005 x f (GHz)

You do not find the Adapter you need for an application? You need technical support? You need price and delivery information? Please contact your nearest Spectrum Representative, or please contact us direct.

Telephone: +49-89-3548-040 Facsimile: +49-89-3548-0490
e-mail: sales@spectrum-et.com www.spectrum-et.com

Dimensions shown are Inches over Millimeters or vice versa. Standard units have stainless finish (last 2 digits of the P/N are -02). Interfaces are per DIN 47 223, DIN 47 226, IEC 169-4, IEC 169-7, IEC 169-8, IEC 457-2, IEC 60169-5, IEEE 287, MIL-PRF-39012, MIL DTL-24044, MIL DTL-3643,MIL-STD-348B, where applicable

Part - No.	8001-HFND-02
Connectors	N NMD-m to 2.4 mm-fem.
Frequency	DC - 18.0 GHz
VSWR	1.03 + 0.005 x f (GHz)

Direct ANA Connection

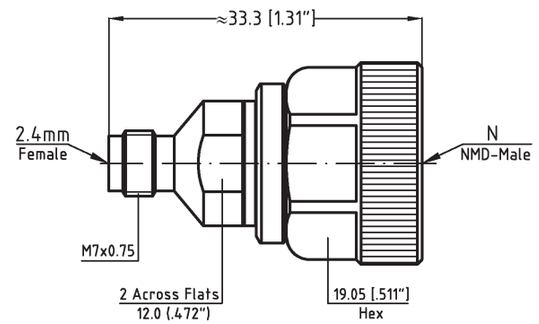

Part - No.	8U01-HFND-02
Connectors	N NMD-m to 2.4 mm-fem.
Frequency	DC - 18.0 GHz
VSWR	1.03 + 0.005 x f (GHz)

Higher Temperature Application

Direct ANA Connection

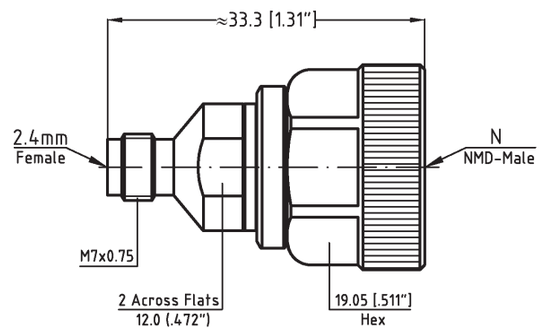

Part - No.	8001-ND92-02
Connectors	N NMD-m to 3.5mm-f
Frequency	DC - 18.0 GHz
VSWR	1.03 + 0.005 x f (GHz)

Direct ANA Connection

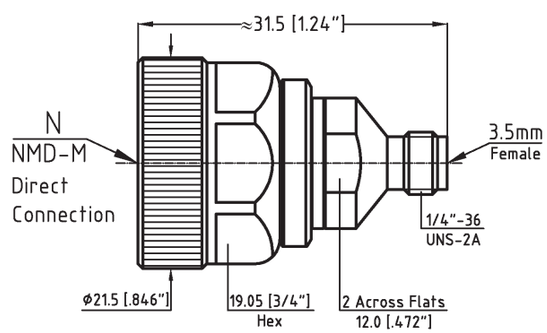

Part - No.	8U01-ND92-02
Connectors	N NMD-m to 3.5mm-f
Frequency	DC - 18.0 GHz
VSWR	1.03 + 0.005 x f (GHz)

Higher Temperature Application

Direct ANA Connection

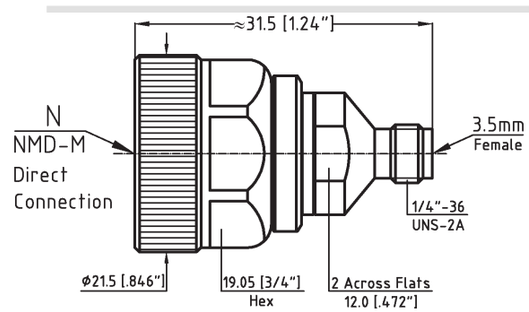

Dimensions shown are Inches over Millimeters or vice versa. Standard units have stainless finish (last 2 digits of the P/N are -02). Interfaces are per DIN 47 223, DIN 47 226, IEC 169-4, IEC 169-7, IEC 169-8, IEC 457-2, IEC 60169-5, IEEE 287, MIL-PRF-39012, MIL DTL-24044, MIL DTL-3643,MIL-STD-348B, where applicable

Spectrum Elektrotechnik GmbH
Germany
www.spectrum-et.com
sales@spectrum-et.com
Phone: +49 / 89 / 35 48 04 0
Fax: +49 / 89 / 35 48 04 90

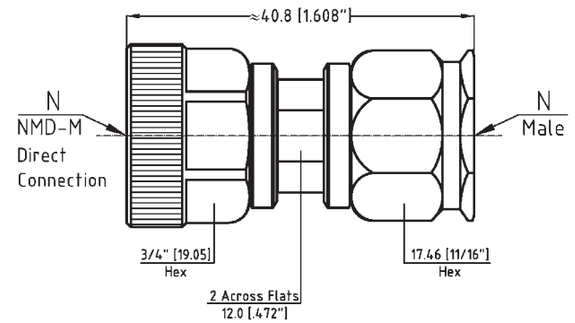

Part - No.	8001-ND51-02
Connectors	N NMD-male to N-male
Frequency	DC - 18.0 GHz
VSWR	1.03 + 0.005 x f (GHz)

Direct ANA Connection

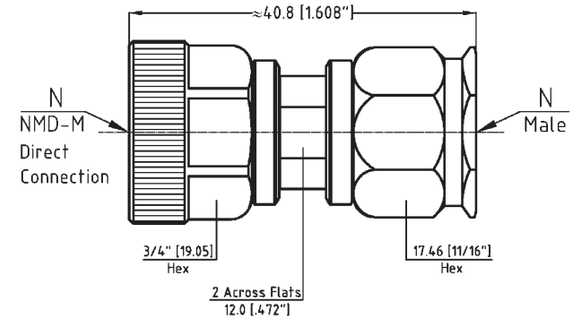

Part - No.	8U01-ND51-02
Connectors	N NMD-male to N-male
Frequency	DC - 18.0 GHz
VSWR	1.03 + 0.005 x f (GHz)

Higher Temperature Application

Direct ANA Connection

Dimensions shown are Inches over Millimeters or vice versa. Standard units have stainless finish (last 2 digits of the P/N are -02). Interfaces are per DIN 47 223, DIN 47 226, IEC 169-4, IEC 169-7, IEC 169-8, IEC 457-2, IEC 60169-5, IEEE 287, MIL-PRF-39012, MIL DTL-24044, MIL DTL-3643,MIL-STD-348B, where applicable

Spectrum Elektrotechnik GmbH
Germany
www.spectrum-et.com
sales@spectrum-et.com
Phone: +49 / 89 / 35 48 04 0
Fax: +49 / 89 / 35 48 04 90

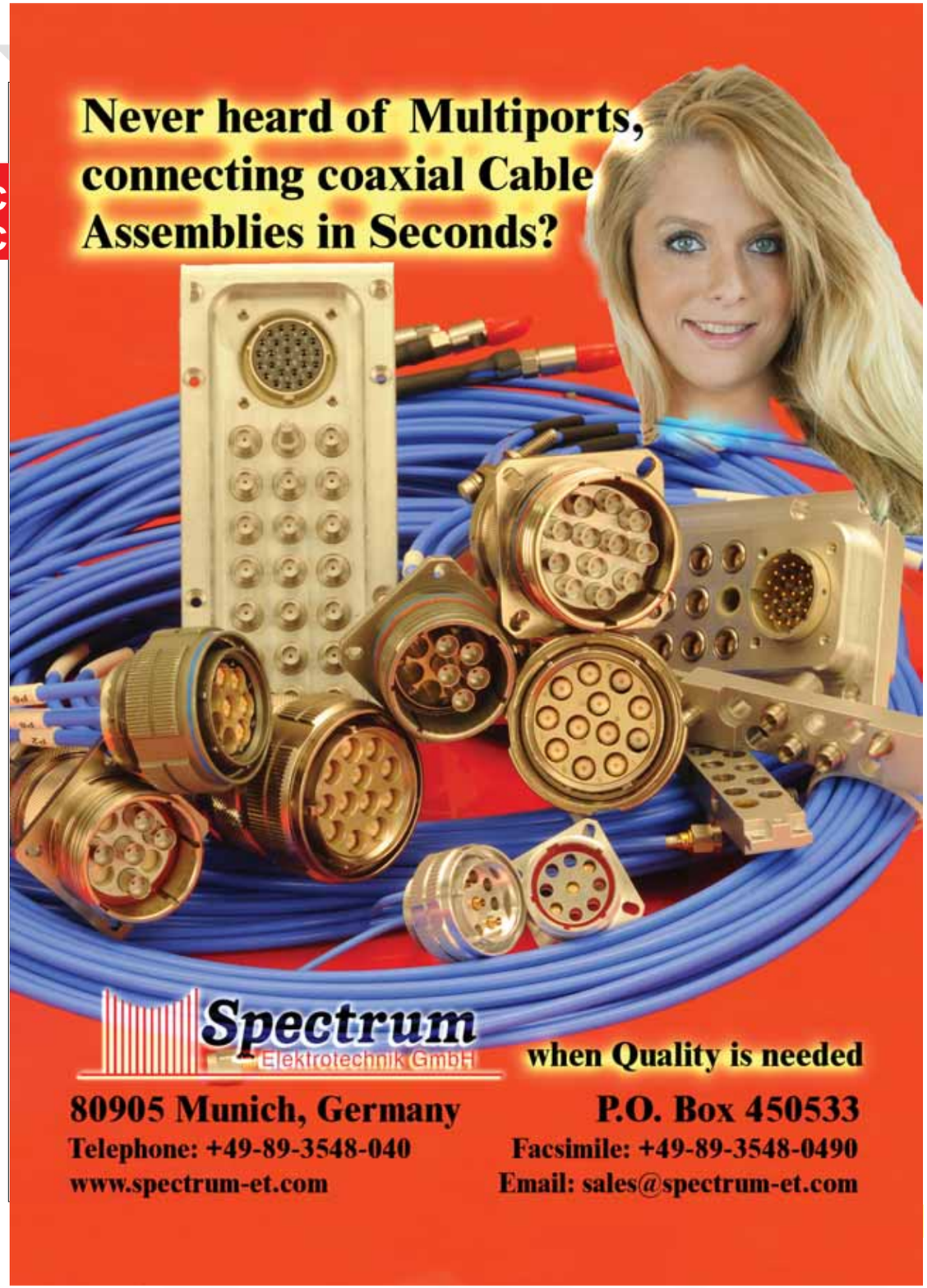

In-Series and Between-Series Adapters Push-On and Slide-On

If your choice of Push-On or Slide-On Adapters is not shown in this section, please refer to the Table below to determine other possible locations. Should you not find your adapter listed in any section, please consult the factory or your Spectrum Elektrotechnik Area Representative.

Push-On & Slide-On Adapters	Section	Page
Overview of Push-On & Slide-On Connectors	DD	1
Procedure for how to use N, TNC & 7/16 Push-On		6
In-Series 7/16 Push-On & Slide-On		8
Between Series 7/16 push-On to Type N		11
In-Series Push-On & Slide On to Type N		14
Between Series N push-On & Slide-On to TNC		22
Between Series N push-On & Slide-On to SMA		24
In-Series Push-On & Slide On to Type TNC		26
Between Series TNC push-On & Slide-On to N		31
Between Series TNC push-On & Slide-On to SMA		34
Procedure for how to use SMA Push-On		38
In-Series Push-On & Slide On to Type SMA		40
Between Series TNC Reverse Sex push-On & Slide-On to N		45
Between Series SMA Reverse Sex push- & Slide-On to SMA		46
Between Series F female to TNC		48

Although our catalog incorporates a very comprehensive range of products, due to our program of continuous development, there is no way that it will contain every product we manufacture. Please consult the factory for the product you require.
To improve our Standard Products we reserve the right to make changes. Specifications are therefore subject to change without notice.

Dimensions shown are Inches over Millimeters or vice versa. Standard units have stainless finish (last 2 digits of the P/N are -02). Interfaces are per DIN 47 223, DIN 47 226, IEC 169-4, IEC 169-7, IEC 169-8, IEC 457-2, IEC 60169-5, IEEE 287, MIL-PRF-39012, MIL DTL-24044, MIL DTL-3643,MIL-STD-348B, where applicable

The Push-On 'Connector Saver' was developed to eliminate the time consuming tightening, torquing and loosening of connectors during test.
The Push-On end of the adapter slides directly onto any standard female of the same connector series, allowing quick connecting and disconnecting.

- • • • • • • • Long Life
- • • • • • DC - 18.0 GHz
- • • • Connector Saver
- • • • • • Low Return Loss
- • • • • Reduced Test Times
- • • • Repeatable Performance
- • • Safe Locking Mechanism
- • • • • • • • • • • • • Connector Saver

Electrical:

Impedance	50 Ohms nominal
Frequency Range	same as standard series
Max. VSWR	same as standard series
Insertion Loss	same as standard series
Contact Resistance	same as standard series
Diel. Withstanding.	same as standard series
RF High Potential	same as standard series
Corona Level Voltage	same as standard series

Mechanical:

Temperature	Rating -65°C to +70°C, or +150°C respectively for higher temperature units
Durability	500 mating cycles min.

Materials:

Body	Stainless Steel
Center Contact	Beryllium Copper
Outer Conductor	Beryllium Copper and/or stainless steel respectively
Dielectric	TFE Fluorocarbon per DIN 52900 (ASTM-D-1710), or Thermoplast per DIN EN ISO 10350, or PEI per in-house specification respectively for higher temperature applications.

Finish:

Center Contact	Gold Plate per ASTM-B-488, Type III, Code C, Class 1.25
Body	passivate per QQ-P-35, spring finger .00003 inch (0.8 µm) min. gold plating per MIL-DTL-45204,

Dimensions shown are Inches over Millimeters or vice versa. Standard units have stainless finish (last 2 digits of the P/N are -02). Interfaces are per DIN 47 223, DIN 47 226, IEC 169-4, IEC 169-7, IEC 169-8, IEC 457-2, IEC 60169-5, IEEE 287, MIL-PRF-39012, MIL DTL-24044, MIL DTL-3643,MIL-STD-348B, where applicable

Spectrum Elektrotechnik GmbH
Germany
www.spectrum-et.com
sales@spectrum-et.com
Phone: +49 / 89 / 35 48 04 0
Fax: +49 / 89 / 35 48 04 90

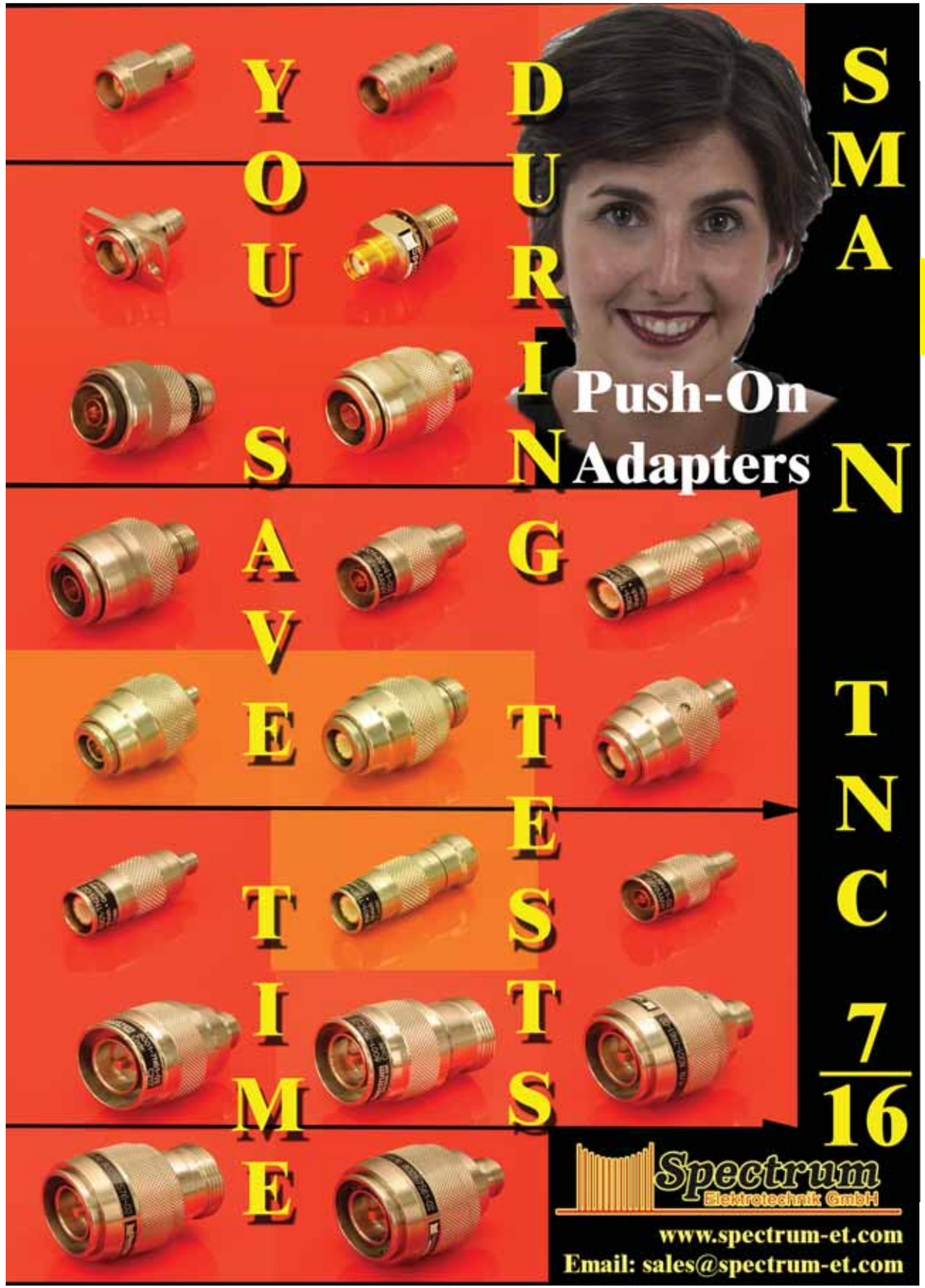

INTRODUCTION: PUSH-ON connectors do not use threaded coupling nuts, they are mated by just sliding together, allowing quick and easy connection and disconnection, guaranteeing repeatable performance, reduced test times and longevity. PUSH-ONs are designed with an automatic locking mechanism, and are also available with slotted beryllium copper outer conductor only, providing the necessary insertion and withdrawal force. PUSH-ONs can be purchased with float mount, and are suited then for axial and radial misalignment. The misalignment nature is obtained by a spring mechanism which separates the connector interface from the flange housing and allows it to float for blind mating purposes. PUSH-ON connectors can be divided into two groups:

PUSH-ON CONNECTORS MATING WITH REGULAR FEMALE CONNECTORS

PUSH-ON CONNECTOR SERIES BY DESIGN

REGULAR CONNECTORS: Male connectors of types 7/16, N, TNC and SMA are designed with threaded coupling nuts for safe attachment. Coupling these connectors means threading, tightening and torquing, then loosening and unthreading again. In various applications, e.g. during repetitive testing, the process for connecting and disconnecting may be more time consuming than the test cycle itself, especially when only fast go / no go tests are performed. Occasionally, limited space requirements make tightening and torquing of coupling nuts of regular connectors difficult, if not impossible.

PUSH-ON CONNECTORS MATING WITH REGULAR FEMALE CONNECTORS: To eliminate the time consuming tightening, torquing and loosening of regular connectors, Spectrum Elektrotechnik GmbH developed the push-on connectors, push-on connector savers and push-on adapters. The push-on connector is a male connector and does not use a threaded coupling nut. It slides directly onto any female connector of the same series, allowing quick and easy connection and disconnection, guaranteeing repeatable performance, reduced test times and long life, operating over the full frequency range of the particular connector series with low insertion loss and excellent return loss. Push-ons were designed for series **7/16, N, TNC** and **SMA**, and in different configurations, including **full locking with non-locking rear nut**, and **non-locking**.

FULL LOCKING PUSH-ON 7/16, N, AND TNC: The coupling nut of the push-on, the lock nut, incorporates an intelligent mechanism, developed by Spectrum Elektrotechnik GmbH. Easily the push-on slides onto any female connector of the same connector series, and locks safely, when released. To disconnect simply push the lock nut forward again and keep in that position until the push-on connector is removed.
There are applications where longer connection is needed and where the connector must remain locked firmly. In such instances it must be assured that the push-on cannot be disconnected, not even by mistake.

For that purpose a threaded rear nut is employed. With the rear nut engaged the connector cannot be pulled off, not even by mistake (Exception: no full locking version available in SMA.)

LOCKING PUSH-ON 7/16, N, TNC AND SMA WITH NON-LOCKING REAR NUT: The push-on connector operates exactly like the full locking version, with the exception that the rear nut cannot be engaged.

NON-LOCKING PUSH-ON 7/16, N, TNC AND SMA: The non-locking push-on connectors are recommended for short term testing that usually takes only seconds. The non-locking push-on connector does not employ a lock nut, therefore does not grip onto the thread of the mating female connector. The outer conductor is slotted and made from beryllium copper, heat treated. Its insertion/withdrawal force keeps the connector in place. However, cables, especially of bigger dimensions, may pull off the push-on connector when there is no guiding and securing hand. These non-locking push-on connectors should only be used for short term testing with a guiding hand on the connector for safe connection.

PUSH-ON CONNECTORS SAVERS AND ADAPTERS were developed for attachment to cable assemblies which are terminated with regular connectors. The connector saver, or adapter is supplied with a standard connector on one side, and a push-on connector at the other end. The standard connector end engages with the standard connector of opposite sex at the cable assembly. The push-on end slides directly onto any standard female of the same sex configuration. Cable assemblies are modified in seconds, changed from a standard product to a state-of-the-art push-on assembly.
Some of these push-on connector savers and adapters are also available with float mount, and are suited for axial and radial misalignment. The misalignment nature of the adapter is obtained by a spring mechanism which separates the connector interface from the flange housing and allows it to float, as needed for blind mating purposes.
Push-on connector savers and adapters are available within and between the series **7/16**, **N**, **TNC** and **SMA**. They are normally supplied in **full locking** configuration, **locking with non-locking rear nut** and **non-locking**. (Exception: no full locking version available in SMA.)

PUSH-ON CONNECTOR SERIES BY DESIGN: Several connector series, such as **BMA, SBX, SBY** and **SMP** were developed for a wide variety of microwave interconnect problems, mate applications for modularized packages, racks and panels and dense packaging. The connector series, depending on size and design are used for low, moderate and high power applications. They are designed for multiple interconnects, maintaining reliable performance and long life.

Procedure for how to use the N, TNC and 7/16 Push-On male. Push-On Connectors mate with any standard female connector of the same connector style.

DD

1. Convert your standard Assembly into a Push-On Assembly using the Nf to Nm Push-On Adapter.

2. Put your fingers firmly onto the knurls of the "Lock Nut".

3. Push "Lock Nut" forward and engage the Push-On end of the Adapter with the mating female. Back nut must be released.

4. The Connection has been completed, easy and fast. The connector has been locked on safely.

5 . To unlock (when "Back Nut" is in unlocked mode) push the "Lock Nut" forward and stop reverse movement by setting your fingers onto the "Back Nut".

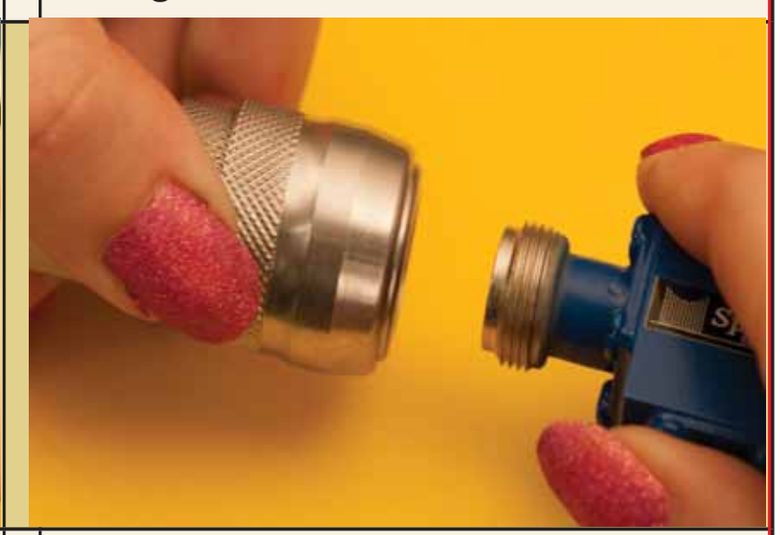

6. Keep fingers on "Back Nut" to ensure that "Lock Nut" cannot slide back and pull the connector off.

DD7

The Push-On 'Connector Saver' was developed to eliminate the time consuming tightening, torquing and loosening of connectors during test.
The Push-On end of the adapter slides directly onto any standard female of the same connector series, allowing quick connecting and disconnecting.

Advantages

- • • • • • • • Long Life
- • • • • • • DC - 7.5 GHz
- • • • Connector Saver
- • • • • • Low Return Loss
- • • • • Reduced Test Times
- • • • Repeatable Performance
- • • Safe Locking Mechanism
- • • Connector Saver to Type 7/16

Electrical:

Impedance	50 Ohms nominal
Frequency Range	same as standard series
Max. VSWR	same as standard series
Insertion Loss	same as standard series
Contact Resistance	same as standard series
Diel. Withstanding.	same as standard series
RF High Potential	same as standard series
Corona Level Voltage	same as standard series

Mechanical:

Temperature	Rating -65°C to +70°C, or +150°C respectively for higher temperature units
Durability	500 mating cycles min.

Materials:

Body	Stainless Steel
Center Contact	Beryllium Copper
Outer Conductor	Beryllium Copper and/or stainless steel respectively
Dielectric	TFE Fluorocarbon per DIN 52900 (ASTM-D-1710), or Thermoplast per DIN EN ISO 10350, or PEI per in-house specification respectively for higher temperature applications.

Finish:

Center Contact	Gold Plate per ASTM-B-488, Type III, Code C, Class 1.25
Body	passivate per QQ-P-35, spring finger .00003 inch (0.8 µm) min. gold plating per MIL-DTL-45204,

Dimensions shown are Inches over Millimeters or vice versa. Standard units have stainless finish (last 2 digits of the P/N are -02). Interfaces are per DIN 47 223, DIN 47 226, IEC 169-4, IEC 169-7, IEC 169-8, IEC 457-2, IEC 60169-5, IEEE 287, MIL-PRF-39012, MIL DTL-24044, MIL DTL-3643,MIL-STD-348B, where applicable

Spectrum Elektrotechnik GmbH
Germany
www.spectrum-et.com
sales@spectrum-et.com
Phone: +49 / 89 / 35 48 04 0
Fax: +49 / 89 / 35 48 04 90

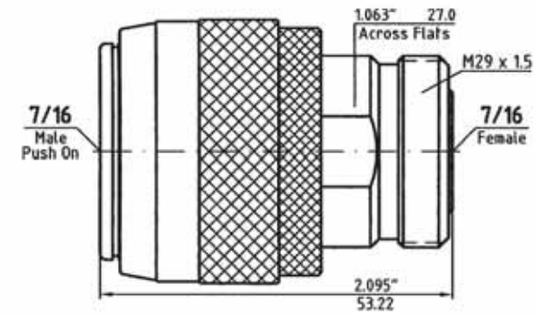

Part - No.	8001-7S76-02
Connectors	7/16-Push to 7/16-F
Frequency	DC - 7.5 GHz
VSWR max.	1.10 : 1

7/16 - PUSH-ON full locking

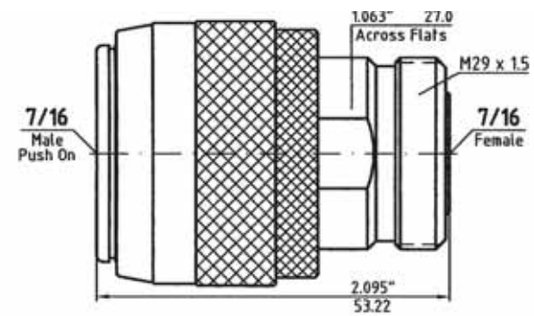

Part - No.	8001-7S76-13
Connectors	7/16-Push to 7/16-F
Frequency	DC - 7.5 GHz
VSWR max.	1.10 : 1

7/16 - PUSH-ON full locking
Connector outer conductor is brass silver plated for lower intermodulation products. Center conductor is gold or silver plated. Remaining parts are stainless steel for ruggedness.

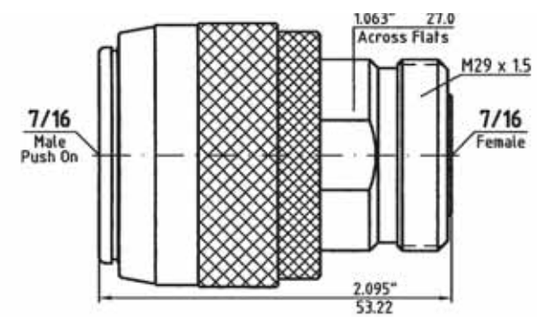

Part - No.	8001-7R76-02
Connectors	7/16-Push to 7/16-F
Frequency	DC - 7.5 GHz
VSWR max.	1.10 : 1

7/16 - PUSH-ON full locking with non-locking rear nut.

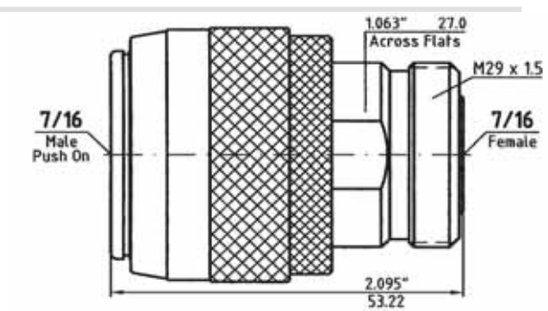

Part - No.	8001-7R76-13
Connectors	7/16-Push to 7/16-F
Frequency	DC - 7.5 GHz
VSWR max.	1.10 : 1

7/16 - PUSH-ON full locking with non-locking rear nut. Connector outer conductor is brass silver plated for lower intermodulation products. Center conductor is gold or silver plated. Remaining parts are stainless steel for ruggedness.

Dimensions shown are Inches over Millimeters or vice versa. Standard units have stainless finish (last 2 digits of the P/N are -02). Interfaces are per DIN 47 223, DIN 47 226, IEC 169-4, IEC 169-7, IEC 169-8, IEC 457-2, IEC 60169-5, IEEE 287, MIL-PRF-39012, MIL DTL-24044, MIL DTL-3643,MIL-STD-348B, where applicable

Spectrum Elektrotechnik GmbH
Germany
www.spectrum-et.com
sales@spectrum-et.com
Phone: +49 / 89 / 35 48 04 0
Fax: +49 / 89 / 35 48 04 90

Part - No.	8001-7N76-02
Connectors	7/16-Push to 7/16-F
Frequency	DC - 7.5 GHz
VSWR max.	1.10 : 1

7/16 - SLIDE-ON non-locking

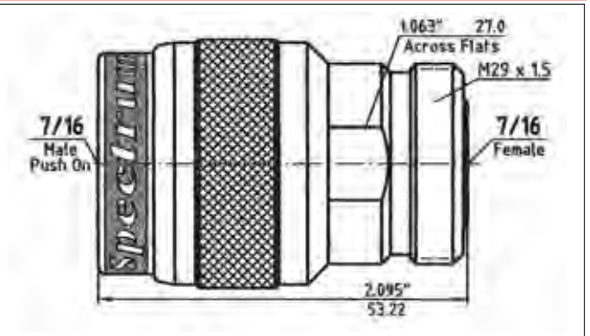

Part - No.	8001-7N76-13
Connectors	7/16-Push to 7/16-F
Frequency	DC - 7.5 GHz
VSWR max.	1.10 : 1

7/16 - SLIDE-ON non-locking

Connector outer conductor is brass silver plated for lower intermodulation products. Center conductor is gold or/and silver plated. Remaining parts are stainless steel for ruggedness.

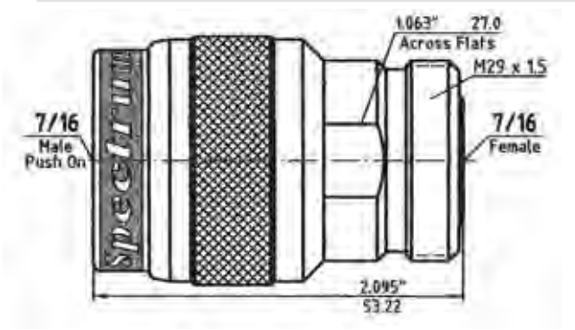

Dimensions shown are Inches over Millimeters or vice versa. Standard units have stainless finish (last 2 digits of the P/N are -02). Interfaces are per DIN 47 223, DIN 47 226, IEC 169-4, IEC 169-7, IEC 169-8, IEC 457-2, IEC 60169-5, IEEE 287, MIL-PRF-39012, MIL DTL-24044, MIL DTL-3643,MIL-STD-348B, where applicable

Spectrum Elektrotechnik GmbH
Germany
www.spectrum-et.com
sales@spectrum-et.com
Phone: +49 / 89 / 35 48 04 0
Fax: +49 / 89 / 35 48 04 90

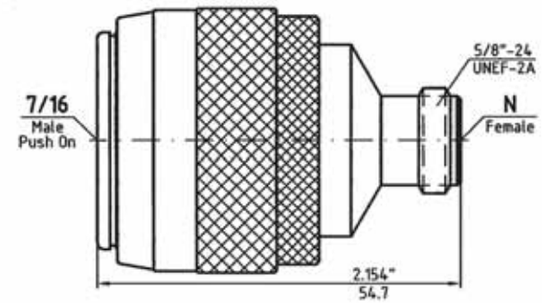

Part - No.	8001-7S61-02
Connectors	7/16-Push to N-F
Frequency	DC - 7.5 GHz
VSWR max.	1.10 : 1

7/16 - PUSH-ON full locking

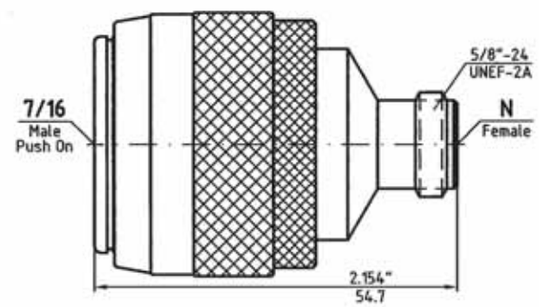

Part - No.	8001-7S61-13
Connectors	7/16-Push to N-F
Frequency	DC - 7.5 GHz
VSWR max.	1.10 : 1

7/16 - PUSH-ON full locking

Connector outer conductor is brass silver plated for lower intermodulation products. Center conductor is gold or silver plated. Remaining parts are stainless steel for ruggedness.

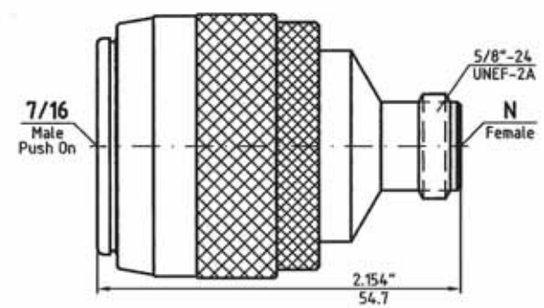

Part - No.	8001-7R61-13
Connectors	7/16-Push to N-F
Frequency	DC - 7.5 GHz
VSWR max.	1.10 : 1

7/16 - PUSH-ON full locking with non-locking rear nut

Connector outer conductor is brass silver plated for lower intermodulation products. Center conductor is gold or silver plated. Remaining parts are stainless steel for ruggedness.

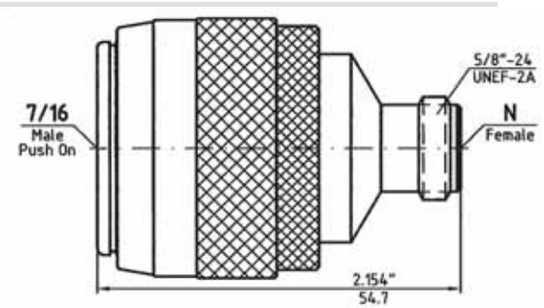

Part - No.	8001-7R61-02
Connectors	7/16-Push to N-F
Frequency	DC - 7.5 GHz
VSWR max.	1.10 : 1

7/16 - PUSH-ON full locking with non-locking rear nut.

Dimensions shown are Inches over Millimeters or vice versa. Standard units have stainless finish (last 2 digits of the P/N are -02). Interfaces are per DIN 47 223, DIN 47 226, IEC 169-4, IEC 169-7, IEC 169-8, IEC 457-2, IEC 60169-5, IEEE 287, MIL-PRF-39012, MIL DTL-24044, MIL DTL-3643,MIL-STD-348B, where applicable

Spectrum Elektrotechnik GmbH
Germany
www.spectrum-et.com
sales@spectrum-et.com
Phone: +49 / 89 / 35 48 04 0
Fax: +49 / 89 / 35 48 04 90

Part - No.	8001-7N61-02
Connectors	7/16-Push to N-F
Frequency	DC - 7.5 GHz
VSWR max.	1.10 : 1

7/16 - SLIDE-ON non-locking

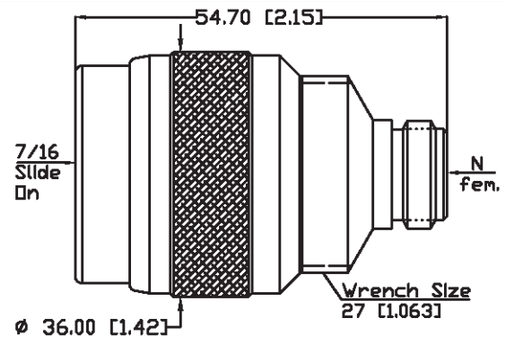

Part - No.	8001-7B61-02
Connectors	7/16-Push to N-F
Frequency	DC - 7.5 GHz
VSWR max.	1.10 : 1

7/16 - SLIDE-ON non-locking

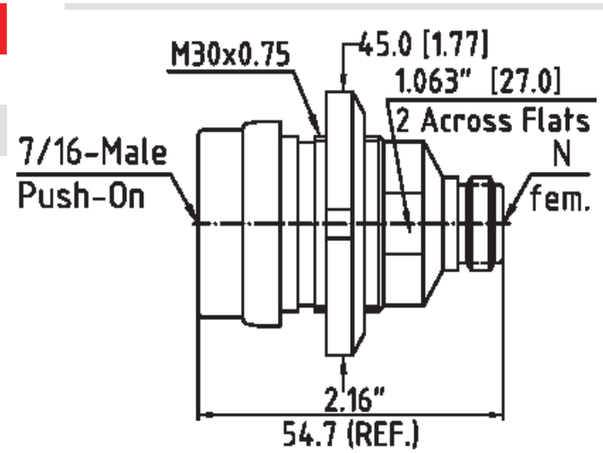

In this catalog only the Adapters are shown that may be of interest to the majority of the users.
Spectrum has manufactured many more Adapters of this series and all the other series.

Therefore, should you need an Adapter for a special application, please contact our engineering staff. We even may have designed the unit already you need.

Telephone: +49-89-3548-040 Facsimile: +49-89-3548-0490
E-mail: sales@spectrum-et.com www.spectrum-et.com

Dimensions shown are Inches over Millimeters or vice versa. Standard units have stainless finish (last 2 digits of the P/N are -02). Interfaces are per DIN 47 223, DIN 47 226, IEC 169-4, IEC 169-7, IEC 169-8, IEC 457-2, IEC 60169-5, IEEE 287, MIL-PRF-39012, MIL DTL-24044, MIL DTL-3643,MIL-STD-348B, where applicable

The Push-On 'Connector Saver' was developed to eliminate the time consuming tightening, torquing and loosening of connectors during test.
The Push-On end of the adapter slides directly onto any standard female of the same connector series, allowing quick connecting and disconnecting.

Advantages

- • • • • • • Long Life
- • • • • • DC - 18.0 GHz
- • • • Connector Saver
- • • • • • Low Return Loss
- • • • • Reduced Test Times
- • • • Repeatable Performance
- • • Safe Locking Mechanism
- • • • • Connector Saver to Type N

Electrical:

Impedance	50 Ohms nominal
Frequency Range	same as standard series
Max. VSWR	same as standard series
Insertion Loss	same as standard series
Contact Resistance	same as standard series
Diel. Withstanding.	same as standard series
RF High Potential	same as standard series
Corona Level Voltage	same as standard series

Mechanical:

Temperature	Rating -65°C to +70°C, or +150°C respectively for higher temperature units
Durability	500 mating cycles min.

Materials:

Body	Stainless Steel
Center Contact	Beryllium Copper
Outer Conductor	Beryllium Copper and/or stainless steel respectively
Dielectric	TFE Fluorocarbon per DIN 52900 (ASTM-D-1710), or Thermoplast per DIN EN ISO 10350, or PEI per in-house specification respectively for higher temperature applications.

Finish:

Center Contact	Gold Plate per ASTM-B-488, Type III, Code C, Class 1.25
Body	passivate per QQ-P-35, spring finger .00003 inch (0.8 µm) min. gold plating per MIL-DTL-45204,

Dimensions shown are Inches over Millimeters or vice versa. Standard units have stainless finish (last 2 digits of the P/N are -02). Interfaces are per DIN 47 223, DIN 47 226, IEC 169-4, IEC 169-7, IEC 169-8, IEC 457-2, IEC 60169-5, IEEE 287, MIL-PRF-39012, MIL DTL-24044, MIL DTL-3643,MIL-STD-348B, where applicable

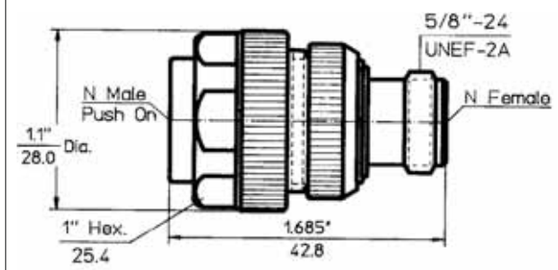

Part - No.	8001-NS61-02
Connectors	N-Push-m to N-fem.
Frequency	DC - 18.0 GHz
VSWR max.	1.03 + 0.005 x f(GHz)

N - PUSH-ON full locking

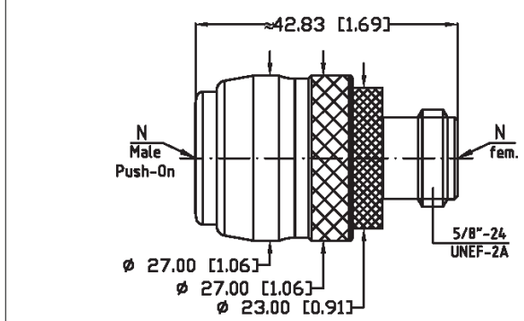

Part - No.	8002-NS61-02
Connectors	N-Push-m to N-fem.
Frequency	DC - 18.0 GHz
VSWR max.	1.03 + 0.005 x f(GHz)

N - PUSH-ON full locking

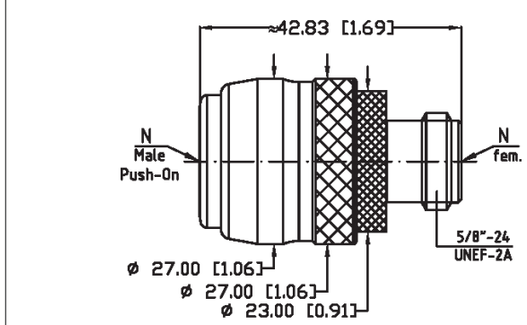

Part - No.	8U02-NS61-02
Connectors	N-Push-m to N-fem.
Frequency	DC - 18.0 GHz
VSWR max.	1.03 + 0.005 x f(GHz)

N - PUSH-ON full locking for higher temperature applications.

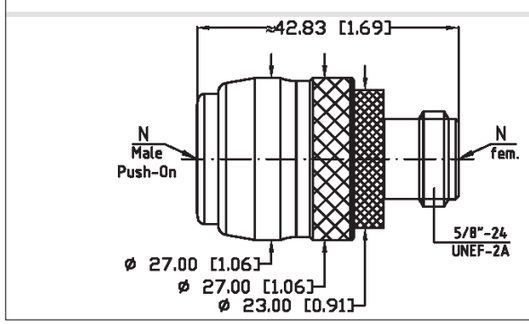

Part - No.	8002-NS61-13
Connectors	N-Push-m to N-fem.
Frequency	DC - 18.0 GHz
VSWR max.	1.03 + 0.005 x f(GHz)

N-male Push-On full locking. Connector outer conductor is brass silver plated for lower intermodulation products. Center conductor is BeCu2 and gold or silver plated. Remaining parts are stainless steel for ruggedness.

Dimensions shown are Inches over Millimeters or vice versa. Standard units have stainless finish (last 2 digits of the P/N are -02). Interfaces are per DIN 47 223, DIN 47 226, IEC 169-4, IEC 169-7, IEC 169-8, IEC 457-2, IEC 60169-5, IEEE 287, MIL-PRF-39012, MIL DTL-24044, MIL DTL-3643,MIL-STD-348B, where applicable

Part - No.	8U02-NS61-13
Connectors	N-Push-m to N-fem.
Frequency	DC - 18.0 GHz
VSWR max.	1.03 + 0.005 x f(GHz)

N-male Push-On full locking for higher temperature applications. Connector outer conductor is brass silver plated for lower intermodulation products. Center conductor is BeCu2 and gold or silver plated. Remaining parts are stainless steel for ruggedness.

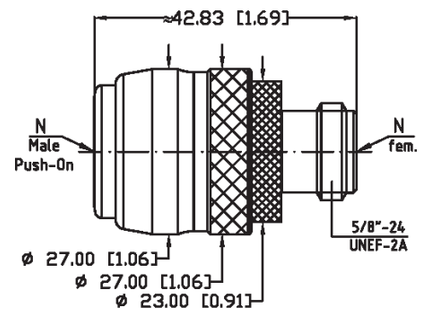

Part - No.	8002-NL61-13
Connectors	N-Push-m to N-fem.
Frequency	DC - 18.0 GHz
VSWR max.	1.03 + 0.005 x f(GHz)

N-male Push-On full locking with non-locking rear nut. Connector outer conductor is brass silver plated for lower intermodulation products. Center conductor is BeCu2 and gold or silver plated. Remaining parts are stainless steel for ruggedness.

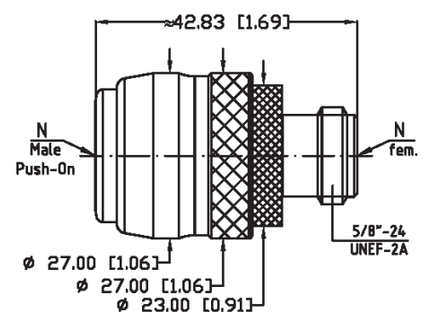

Part - No.	8002-NL61-02
Connectors	N-Push-m to N-fem.
Frequency	DC - 18.0 GHz
VSWR max.	1.03 + 0.005 x f(GHz)

N - PUSH-ON full locking with non-locking rear nut

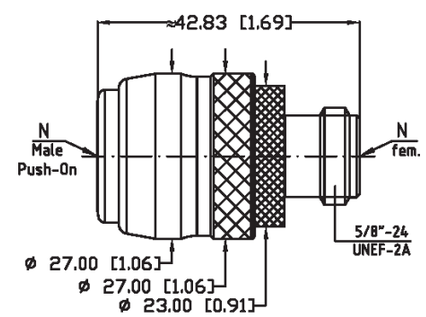

Part - No.	8U02-NL61-02
Connectors	N-Push-m to N-fem.
Frequency	DC - 18.0 GHz
VSWR max.	1.03 + 0.005 x f(GHz)

N - PUSH-ON full locking with non-locking rear nut for higher temperature applications

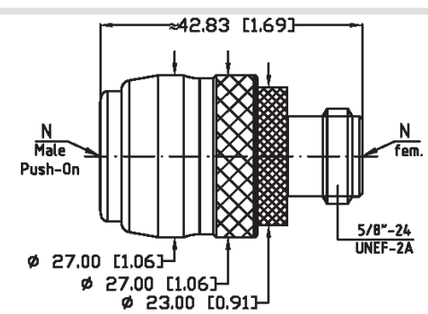

Dimensions shown are Inches over Millimeters or vice versa. Standard units have stainless finish (last 2 digits of the P/N are -02). Interfaces are per DIN 47 223, DIN 47 226, IEC 169-4, IEC 169-7, IEC 169-8, IEC 457-2, IEC 60169-5, IEEE 287, MIL-PRF-39012, MIL DTL-24044, MIL DTL-3643,MIL-STD-348B, where applicable

Spectrum Elektrotechnik GmbH
Germany
www.spectrum-et.com
sales@spectrum-et.com
Phone: +49 / 89 / 35 48 04 0
Fax: +49 / 89 / 35 48 04 90

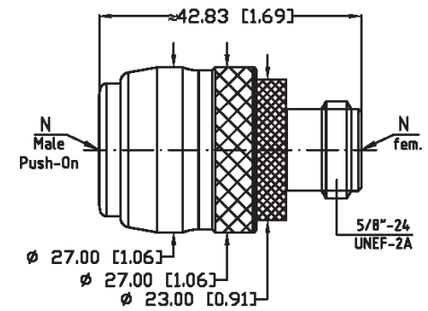

Part - No.	8U02-NL61-13
Connectors	N-Push-m to N-fem.
Frequency	DC - 18.0 GHz
VSWR max.	1.03 + 0.005 x f(GHz)

N - PUSH-ON full locking with non-locking rear nut. Connector outer conductor is brass silver plated for lower intermodulation products. Center conductor is BeCu2 and gold or silver plated. Remaining parts are stainless steel for ruggedness.

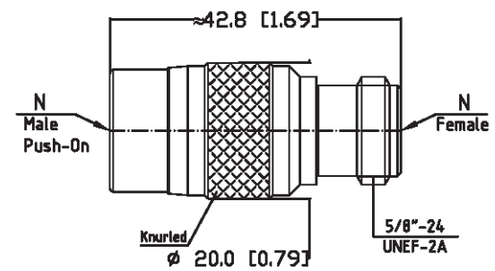

Part - No.	8001-NN61-02
Connectors	N-Push-m to N-fem.
Frequency	DC - 18.0 GHz
VSWR max.	1.03 + 0.005 x f(GHz)

N-Slide-On non-locking

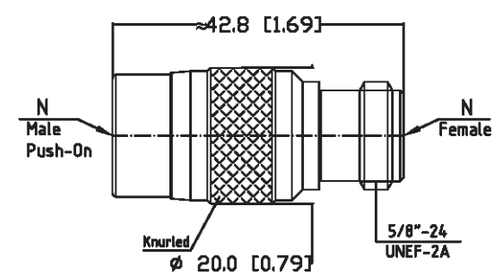

Part - No.	8U01-NN61-02
Connectors	N-Push-m to N-fem.
Frequency	DC - 18.0 GHz
VSWR max.	1.03 + 0.005 x f(GHz)

N-Slide-On non-locking for higher temperature applications.

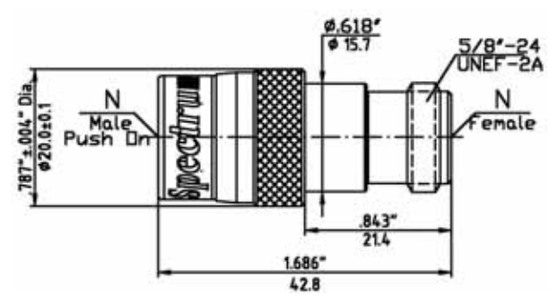

Part - No.	8002-NN61-02
Connectors	N-Push-m to N-fem.
Frequency	DC - 18.0 GHz
VSWR max.	1.03 + 0.005 x f(GHz)

N-Slide-On non-locking

Dimensions shown are Inches over Millimeters or vice versa. Standard units have stainless finish (last 2 digits of the P/N are -02). Interfaces are per DIN 47 223, DIN 47 226, IEC 169-4, IEC 169-7, IEC 169-8, IEC 457-2, IEC 60169-5, IEEE 287, MIL-PRF-39012, MIL DTL-24044, MIL DTL-3643,MIL-STD-348B, where applicable

Spectrum Elektrotechnik GmbH
Germany
www.spectrum-et.com
sales@spectrum-et.com
Phone: +49 / 89 / 35 48 04 0
Fax: +49 / 89 / 35 48 04 90

Part - No. 8005-NS61-02

Connectors	N-Slide-On-m to N-fem.
Frequency	DC - 14.0 GHz
VSWR max.	1.03 + 0.005 x f(GHz)

N-Slide-On non-locking Bulkhead Feed-through floating in axial and radial direction

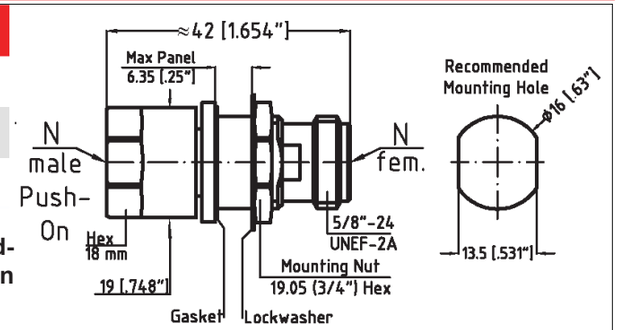

Part - No. 8005-NS61-05

Connectors	N-Slide-On-m to N-fem.
Frequency	DC - 14.0 GHz
VSWR max.	1.03 + 0.005 x f(GHz)

N-Slide-On non-locking Bulkhead Feed-through floating in axial and radial direction. Connector body is from brass nickel plated.

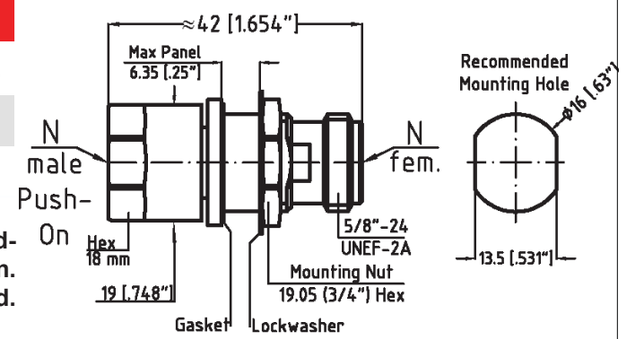

Part - No. 8001-FN61-02

Connectors	N-Slide-On-m to N-fem.
Frequency	DC - 14.0 GHz
VSWR max.	1.03 + 0.005 x f(GHz)

N-Slide-On non-locking, 4-hole flanged, floating in axial and radial direction

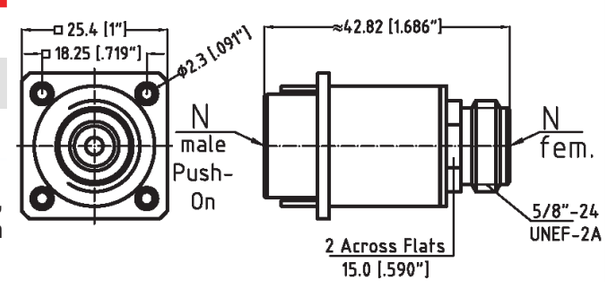

You do not find the Adapter you need for an application? You need technical support? You need price and delivery information? Please contact your nearest Spectrum Representative, or please contact us direct.

Telephone: +49-89-3548-040 Facsimile: +49-89-3548-0490
e-mail: sales@spectrum-et.com www.spectrum-et.com

Dimensions shown are Inches over Millimeters or vice versa. Standard units have stainless finish (last 2 digits of the P/N are -02). Interfaces are per DIN 47 223, DIN 47 226, IEC 169-4, IEC 169-7, IEC 169-8, IEC 457-2, IEC 60169-5, IEEE 287, MIL-PRF-39012, MIL DTL-24044, MIL DTL-3643,MIL-STD-348B, where applicable

Part - No. 8003-NS61-02

Connectors	N-Push-m to N-fem.
Frequency	DC - 18.0 GHz
VSWR max.	1.03 + 0.005 x f(GHz)

N-male Push-On full locking onto Double-D N-female Connectors

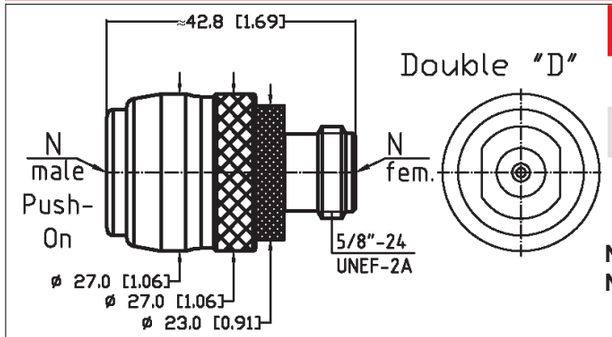

Part - No. 8U03-NS61-02

Connectors	N-Push-m to N-fem.
Frequency	DC - 18.0 GHz
VSWR max.	1.03 + 0.005 x f(GHz)

N-male Push-On full locking onto Double-D N-female Connectors for higher temperature applications.

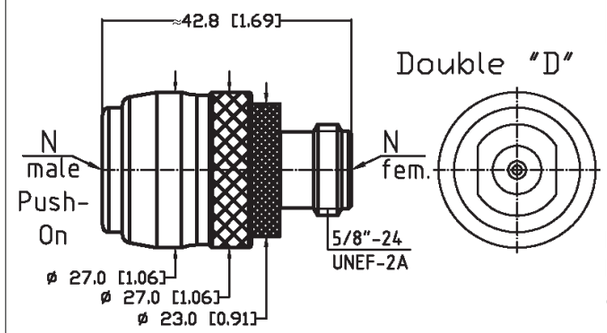

Part - No. 8003-NS61-13

Connectors	N-Push-m to N-fem.
Frequency	DC - 18.0 GHz
VSWR max.	1.03 + 0.005 x f(GHz)

N-male Push-On full locking onto Double-D N-female Connectors. Connector outer conductor is brass silver plated for lower intermodulation products. Center conductor is BeCu2 and gold or/and silver plated. Remaining parts are stainless steel for ruggedness.

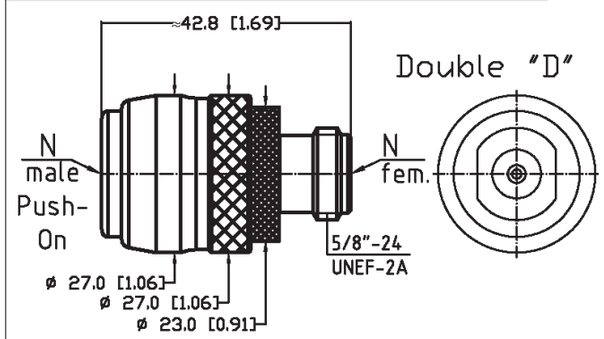

Part - No. 8U03-NS61-13

Connectors	N-Push-m to N-fem.
Frequency	DC - 18.0 GHz
VSWR max.	1.03 + 0.005 x f(GHz)

N-male Push-On full locking onto Double-D N-female Connectors for higher temperature applications. Connector outer conductor is brass silver plated for lower intermodulation products. Center conductor is BeCu2 and gold or silver plated. Remaining parts are stainless steel for ruggedness.

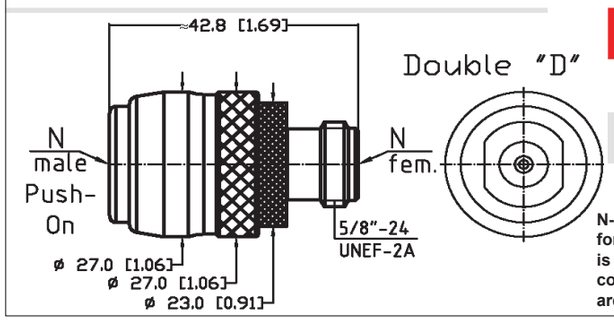

Dimensions shown are Inches over Millimeters or vice versa. Standard units have stainless finish (last 2 digits of the P/N are -02). Interfaces are per DIN 47 223, DIN 47 226, IEC 169-4, IEC 169-7, IEC 169-8, IEC 457-2, IEC 60169-5, IEEE 287, MIL-PRF-39012, MIL DTL-24044, MIL DTL-3643,MIL-STD-348B, where applicable

Spectrum Elektrotechnik GmbH

D D

Part - No.	8003-NL61-02
Connectors	N-Push-m to N-fem.
Frequency	DC - 18.0 GHz
VSWR max.	1.03 + 0.005 x f(GHz)

N-male Push-On full locking onto Double-D N-fem. Connectors with non locking rear nut

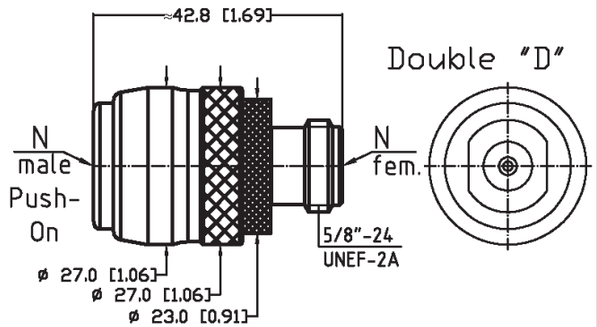

Part - No.	8U03-NL61-02
Connectors	N-Push-m to N-fem.
Frequency	DC - 18.0 GHz
VSWR max.	1.03 + 0.005 x f(GHz)

N-male Push-On full locking onto Double-D N-fem. Connectors with non locking rear nut for higher temperature applications.

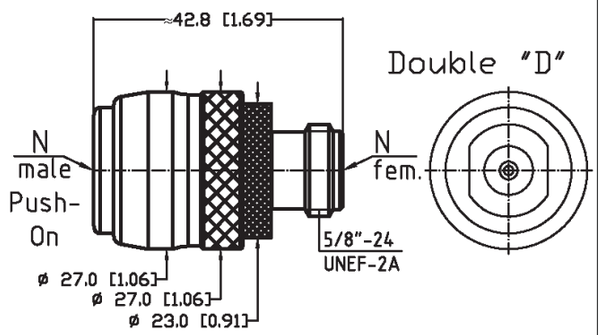

Part - No.	8003-NL61-13
Connectors	N-Push-m to N-fem.
Frequency	DC - 18.0 GHz
VSWR max.	1.03 + 0.005 x f(GHz)

N-male Push-On full locking onto Double-D N-fem. Connectors with non locking rear nut

Connector outer conductor is brass silver plated for lower intermodulation products. Center conductor is BeCu2 and gold or silver plated. Remaining parts are stainless steel for ruggedness.

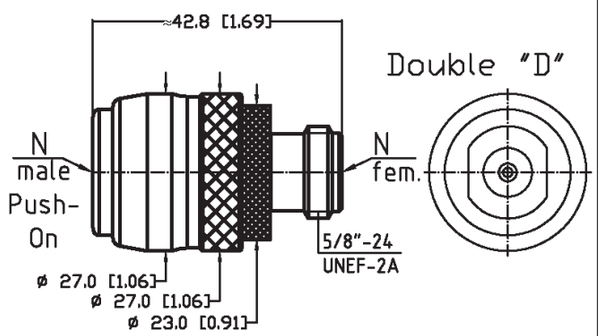

Part - No.	8U03-NL61-13
Connectors	N-Push-m to N-fem.
Frequency	DC - 18.0 GHz
VSWR max.	1.03 + 0.005 x f(GHz)

N-male Push-On full locking onto Double-D N-fem. Connectors with non locking rear nut for higher temperature applications. Connector outer conductor is brass silver plated for lower intermodulation products. Center conductor is BeCu2 and gold or silver plated. Remaining parts are stainless steel for ruggedness.

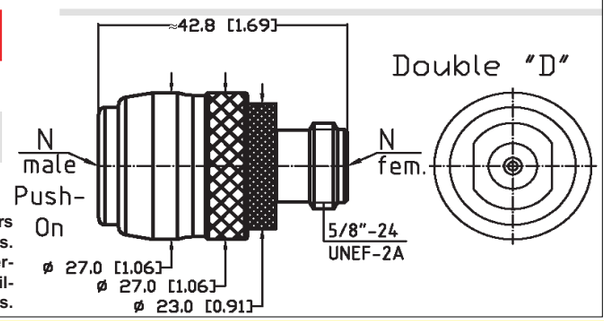

Dimensions shown are Inches over Millimeters or vice versa. Standard units have stainless finish (last 2 digits of the P/N are -02). Interfaces are per DIN 47 223, DIN 47 226, IEC 169-4, IEC 169-7, IEC 169-8, IEC 457-2, IEC 60169-5, IEEE 287, MIL-PRF-39012, MIL DTL-24044, MIL DTL-3643,MIL-STD-348B, where applicable

Spectrum Elektrotechnik GmbH
Germany
www.spectrum-et.com
sales@spectrum-et.com
Phone: +49 / 89 / 35 48 04 0
Fax: +49 / 89 / 35 48 04 90

Be smart, save time

Our Push-On Connectors mate with all standard SMA, N, TNC and 7/16. No threadening/unthreadening anymore, just slide the unit on, done.

Spectrum Elektrotechnik GmbH when Quality is needed

80905 Munich, Germany
Telephone: +49-89-3548-040
WWW.SPECTRUM-ET.COM

P.O. Box 450533
Facsimile: +49-89-3548-0490
Email: sales@spectrum-et.com

D D

N-Push-On-male to TNCA-female

D
D

Part - No.	8001-NS41-02
Connectors	N-Push to TNCA-fem.
Frequency	DC - 18.0 GHz
VSWR max.	1.03 + 0.005 x f(GHz)

N - PUSH-ON full locking

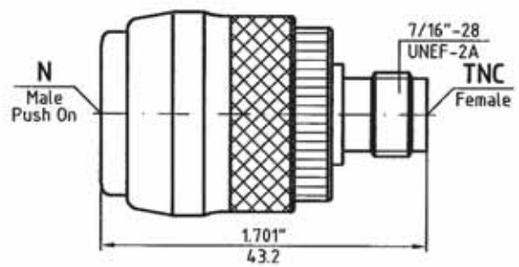

Part - No.	8U01-NS41-02
Connectors	TNC-Push to TNCA-fem.
Frequency	DC - 18.0 GHz
VSWR max.	1.03 + 0.005 x f(GHz)

N - PUSH-ON full locking for higher temperature application

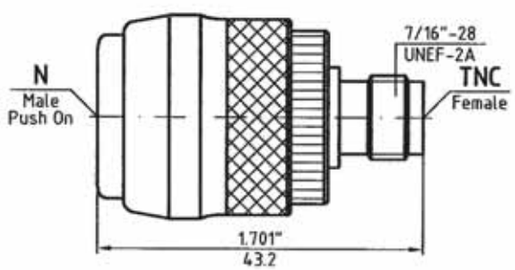

Part - No.	8001-NL41-02
Connectors	N-Push to TNCA-fem.
Frequency	DC - 18.0 GHz
VSWR max.	1.03 + 0.005 x f(GHz)

N-Push-On full locking with non-locking rear nut

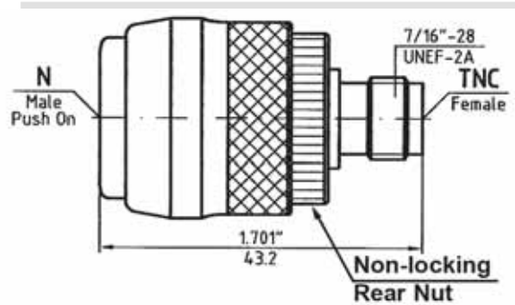

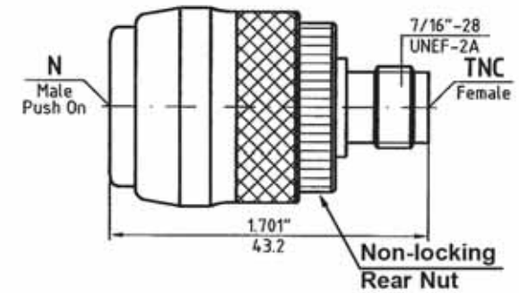

Part - No.	8U01-NL41-02
Connectors	N-Push-m to TNCA-fem.
Frequency	DC - 18.0 GHz
VSWR max.	1.03 + 0.005 x f(GHz)

N-Push-On full locking with non-locking rear nut for higher temperature applications

D
D

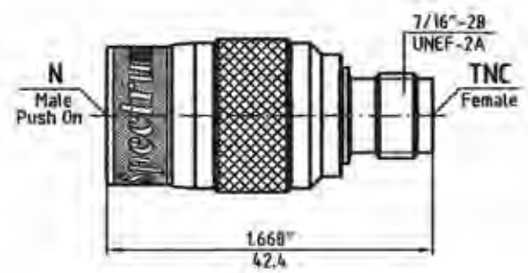

Part - No.	8001-NN41-02
Connectors	N-Slide-m to TNCA-fem.
Frequency	DC - 18.0 GHz
VSWR max.	1.03 + 0.005 x f(GHz)

N-Slide-On non locking

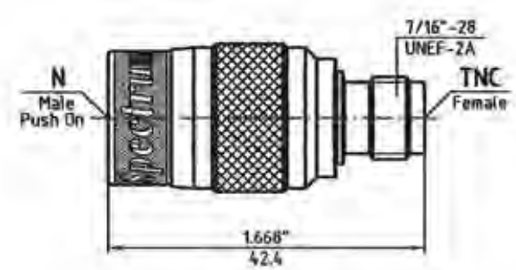

Part - No.	8U01-NN41-02
Connectors	N-Slide-m to TNCA-fem.
Frequency	DC - 18.0 GHz
VSWR max.	1.03 + 0.005 x f(GHz)

N-Slide-On non locking for higher temperature applications.

You do not find the Adapter you need for an application? You need technical support? You need price and delivery information? Please contact your nearest Spectrum Representative, or please contact us direct.

Telephone: +49-89-3548-040 Facsimile: +49-89-3548-0490
e-mail: sales@spectrum-et.com www.spectrum-et.com

Part - No.	8001-NS21-02
Connectors	N-Push-m to SMA-fem.
Frequency	DC - 18.0 GHz
VSWR max.	1.03 + 0.005 x f(GHz)

N - PUSH-ON full locking

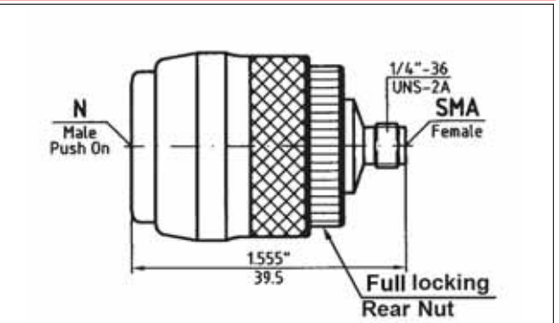

Part - No.	8U01-NS21-02
Connectors	N-Push-m to SMA-fem.
Frequency	DC - 18.0 GHz
VSWR max.	1.03 + 0.005 x f(GHz)

N - PUSH-ON full locking for higher temperature application

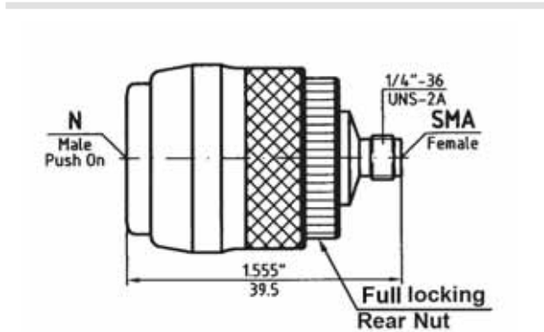

Part - No.	8003-NS21-02
Connectors	N-Push-m to SMA-fem.
Frequency	DC - 18.0 GHz
VSWR max.	1.03 + 0.005 x f(GHz)

N - PUSH-ON full locking onto Double-D N -female

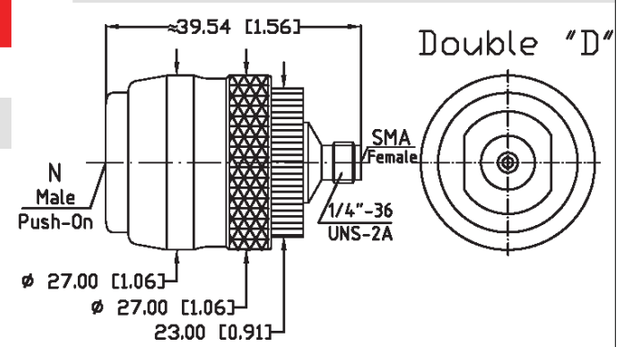

Part - No.	8U03-NS21-02
Connectors	N-Push-m to SMA-fem.
Frequency	DC - 18.0 GHz
VSWR max.	1.03 + 0.005 x f(GHz)

N - PUSH-ON full locking onto Double-D N-fem. for higher temperature applications

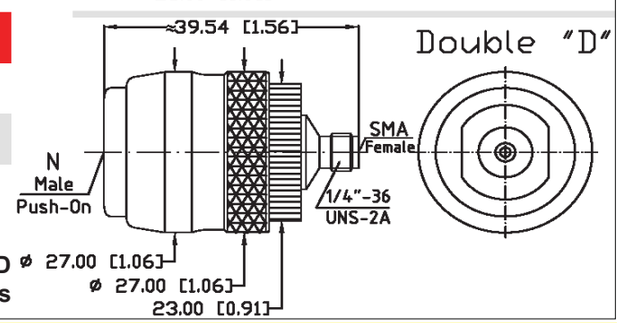

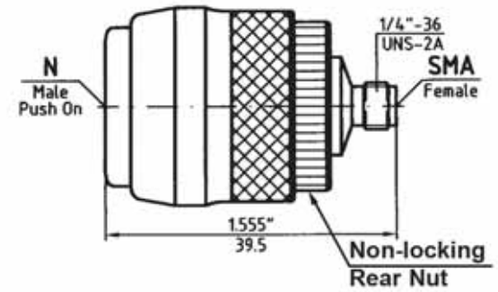

Part - No.	8001-NL21-02
Connectors	N-Push-m to SMA-fem.
Frequency	DC - 18.0 GHz
VSWR max.	1.03 + 0.005 x f(GHz)

N - PUSH-ON full locking with non-locking rear nut

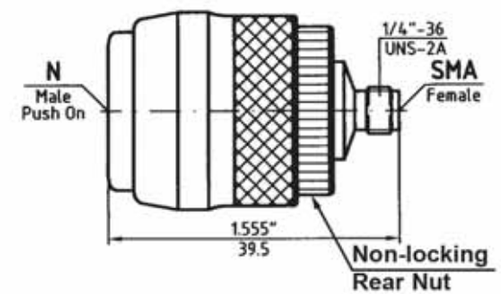

Part - No.	8U01-NL21-02
Connectors	N-Push-m to SMA-fem.
Frequency	DC - 18.0 GHz
VSWR max.	1.03 + 0.005 x f(GHz)

N - PUSH-ON full locking with non-locking rear nut for higher temperature applications

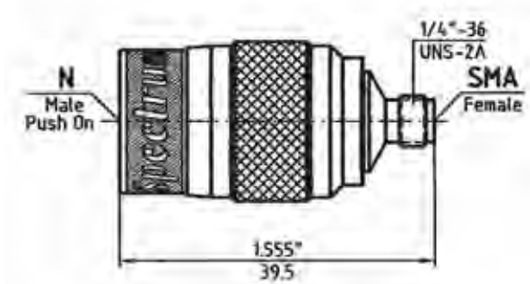

Part - No.	8001-NN21-02
Connectors	N-Slide-m to SMA-fem.
Frequency	DC - 18.0 GHz
VSWR max.	1.03 + 0.005 x f(GHz)

N - PUSH-ON non- locking = SLIDE-ON

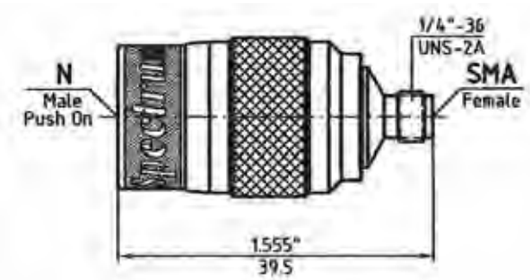

Part - No.	8U01-NN21-02
Connectors	N-Slide-m to SMA-fem.
Frequency	DC - 18.0 GHz
VSWR max.	1.03 + 0.005 x f(GHz)

N - PUSH-ON non-locking = SLIDE-ON for Higher temperature applications

The Push-On 'Connector Saver' was developed to eliminate the time consuming tightening, torquing and loosening of connectors during test.
The Push-On end of the adapter slides directly onto any standard female of the same connector series, allowing quick connecting and disconnecting.

Advantages

- • • • • • • • Long Life
- • • • • • DC - 18.0 GHz
- • • • Connector Saver
- • • • • • Low Return Loss
- • • • • Reduced Test Times
- • • • Repeatable Performance
- • • Safe Locking Mechanism
- • Connector Saver to Type TNC

Electrical:

Impedance	50 Ohms nominal
Frequency Range	same as standard series
Max. VSWR	same as standard series
Insertion Loss	same as standard series
Contact Resistance	same as standard series
Diel. Withstanding.	same as standard series
RF High Potential	same as standard series
Corona Level Voltage	same as standard series

Mechanical:

Temperature	Rating -65°C to +70°C, or +150°C respectively for higher temperature units
Durability	500 mating cycles min.

Materials:

Body	Stainless Steel
Center Contact	Beryllium Copper
Outer Conductor	Beryllium Copper and/or stainless steel respectively
Dielectric	TFE Fluorocarbon per DIN 52900 (ASTM-D-1710), or Thermoplast per DIN EN ISO 10350, or PEI per in-house specification respectively for higher temperature applications.

Finish:

Center Contact	Gold Plate per ASTM-B-488, Type III, Code C, Class 1.25
Body	passivate per QQ-P-35, spring finger .00003 inch (0.8 µm) min. gold plating per MIL-DTL-45204,

Dimensions shown are Inches over Millimeters or vice versa. Standard units have stainless finish (last 2 digits of the P/N are -02). Interfaces are per DIN 47 223, DIN 47 226, IEC 169-4, IEC 169-7, IEC 169-8, IEC 457-2, IEC 60169-5, IEEE 287, MIL-PRF-39012, MIL DTL-24044, MIL DTL-3643,MIL-STD-348B, where applicable

Spectrum Elektrotechnik GmbH
Germany
www.spectrum-et.com
sales@spectrum-et.com
Phone: +49 / 89 / 35 48 04 0
Fax: +49 / 89 / 35 48 04 90

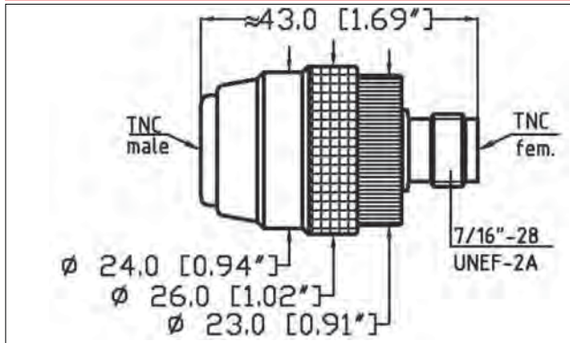

Part - No.	8001-TS41-02
Connectors	TNCA-Push. to TNCA-fem.
Frequency	DC - 18.0 GHz
VSWR max.	1.03 + 0.005 x f(GHz)

TNC-PUSH-ON per MIL-STD-348B, full locking

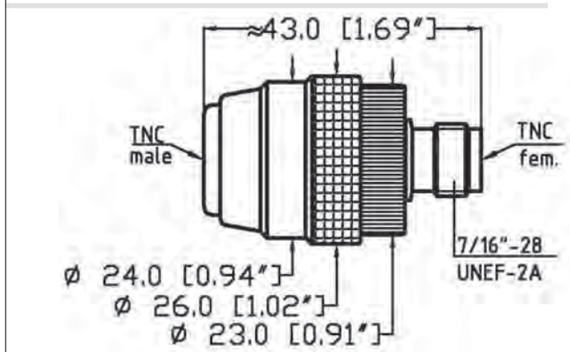

Part - No.	8U01-TS41-02
Connectors	TNCA-Push. to TNCA-fem.
Frequency	DC - 18.0 GHz
VSWR max.	1.03 + 0.005 x f(GHz)

TNC-PUSH-ON per MIL-STD-348B, full locking for higher temperature applications.

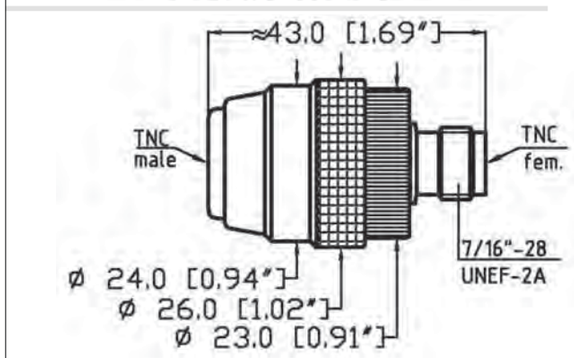

Part - No.	8001-TL41-02
Connectors	TNCA-Push. to TNCA-fem.
Frequency	DC - 18.0 GHz
VSWR max.	1.03 + 0.005 x f(GHz)

TNC-PUSH-ON per MIL-STD-348B, full locking, but with non-locking rear nut

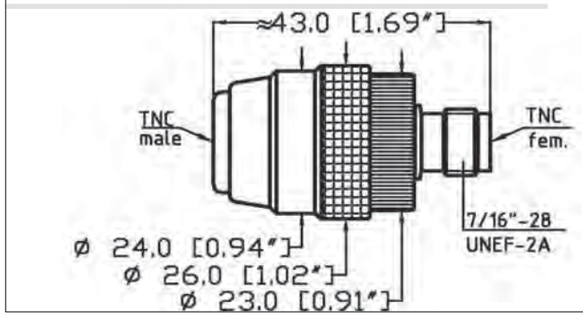

Part - No.	8U01-TL41-02
Connectors	TNCA-Push. to TNCA-fem.
Frequency	DC - 18.0 GHz
VSWR max.	1.03 + 0.005 x f(GHz)

TNC-PUSH-ON per MIL-STD-348B, full locking, but with non-locking rear nut for higher temperature applications.

Dimensions shown are Inches over Millimeters or vice versa. Standard units have stainless finish (last 2 digits of the P/N are -02). Interfaces are per DIN 47 223, DIN 47 226, IEC 169-4, IEC 169-7, IEC 169-8, IEC 457-2, IEC 60169-5, IEEE 287, MIL-PRF-39012, MIL DTL-24044, MIL DTL-3643,MIL-STD-348B, where applicable

Spectrum Elektrotechnik GmbH
Germany
www.spectrum-et.com
sales@spectrum-et.com
Phone: +49 / 89 / 35 48 04 0
Fax: +49 / 89 / 35 48 04 90

Part - No.	8901-TS41-02
Connectors	TNCA-Push. to TNCA-fem.
Frequency	DC - 11.0 GHz
VSWR max.	1.03 + 0.005 x f (GHz)

TNC-PUSH-ON per MIL-STD-348B, full locking

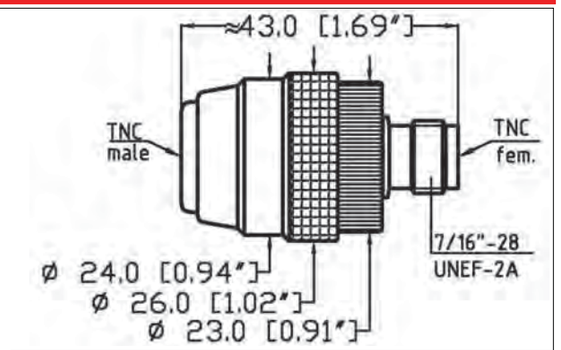

Part - No.	8901-TL41-02
Connectors	TNC-Push. to TNC-fem.
Frequency	DC - 11.0 GHz
VSWR max.	1.03 + 0.005 x f (GHz)

TNC-PUSH-ON per MIL-STD-348, full locking, but with non-locking rear nut.

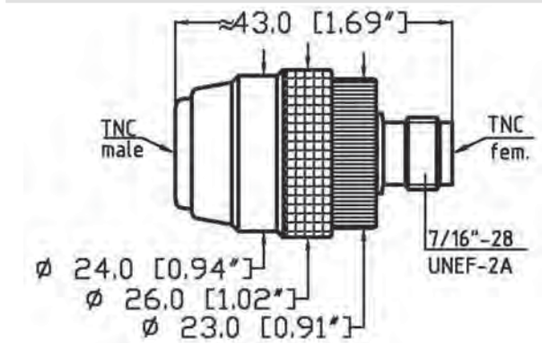

Part - No.	89U1-TL41-02
Connectors	TNCA-Push. to TNCA-fem.
Frequency	DC - 11.0 GHz
VSWR max.	1.03 + 0.005 x f (GHz)

TNC-PUSH-ON per MIL-STD-348B, full locking, but with non-locking rear nut for higher temperature applications.

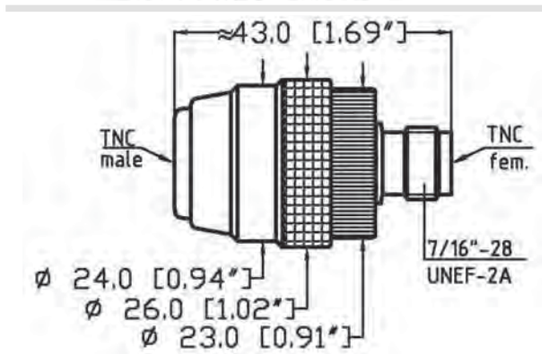

Part - No.	8002-TN41-02
Connectors	TNCA-Push. to TNCA-fem.
Frequency	DC - 18.0 GHz
VSWR max.	1.03 + 0.005 x f (GHz)

TNC-SLIDE-ON per MIL-STD-348B, non locking

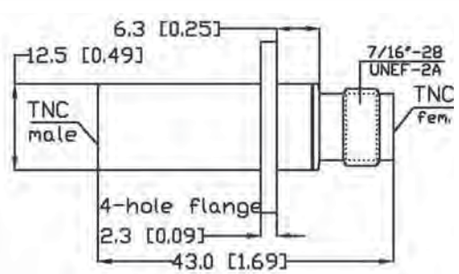

Dimensions shown are Inches over Millimeters or vice versa. Standard units have stainless finish (last 2 digits of the P/N are -02). Interfaces are per DIN 47 223, DIN 47 226, IEC 169-4, IEC 169-7, IEC 169-8, IEC 457-2, IEC 60169-5, IEEE 287, MIL-PRF-39012, MIL DTL-24044, MIL DTL-3643,MIL-STD-348B, where applicable

Spectrum Elektrotechnik GmbH
Germany
www.spectrum-et.com
sales@spectrum-et.com
Phone: +49 / 89 / 35 48 04 0
Fax: +49 / 89 / 35 48 04 90

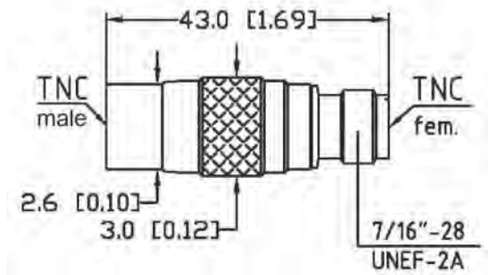

Part - No.	8001-TN41-02
Connectors	TNCA-Push-m to TNCA-fem.
Frequency	DC - 18.0 GHz
VSWR max.	1.03 + 0.005 x f (GHz)

TNC-SLIDE-ON per MIL-STD-348B, non locking

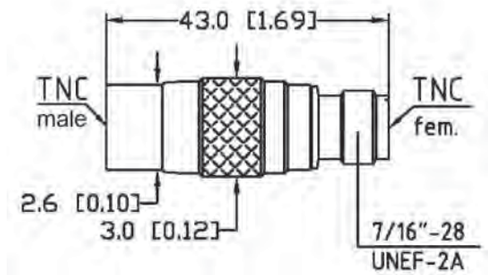

Part - No.	8U01-TN41-02
Connectors	TNCA-Push-m to TNCA-fem.
Frequency	DC - 18.0 GHz
VSWR max.	1.03 + 0.005 x f (GHz)

TNC-SLIDE-ON per per MIL-STD-348B non locking, higher temperature applications.

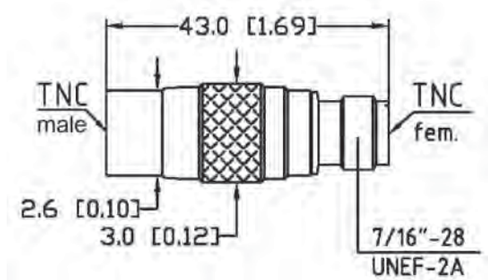

Part - No.	8901-TN41-02
Connectors	TNCA-Push-m to TNCA-fem.
Frequency	DC - 11.0 GHz
VSWR max.	1.03 + 0.005 x f (GHz)

TNC-SLIDE-ON per per MIL-STD-348B, non locking

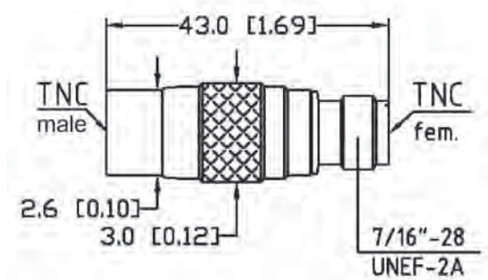

Part - No.	89U1-TN41-02
Connectors	TNCA-Push-m to TNCA-fem.
Frequency	DC - 11.0 GHz
VSWR max.	1.03 + 0.005 x f (GHz)

TNC-SLIDE-ON per MIL-STD-348B, non locking, higher temperature applications.

Dimensions shown are Inches over Millimeters or vice versa. Standard units have stainless finish (last 2 digits of the P/N are -02). Interfaces are per DIN 47 223, DIN 47 226, IEC 169-4, IEC 169-7, IEC 169-8, IEC 457-2, IEC 60169-5, IEEE 287, MIL-PRF-39012, MIL DTL-24044, MIL DTL-3643,MIL-STD-348B, where applicable

Spectrum Elektrotechnik GmbH
Germany
www.spectrum-et.com
sales@spectrum-et.com
Phone: +49 / 89 / 35 48 04 0
Fax: +49 / 89 / 35 48 04 90

Part - No.	8058-TN41-02
Connectors	TNCA-Push. to TNCA-fem.
Frequency	DC - 18.0 GHz
VSWR max.	1.06 + 0.005 x f (GHz)

TNC-SLIDE-ON for higher power applications; good mating at the Push-On side is necessary

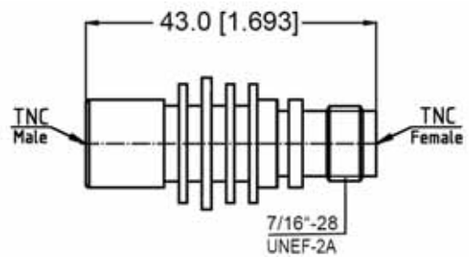

Dimensions shown are Inches over Millimeters or vice versa. Standard units have stainless finish (last 2 digits of the P/N are -02). Interfaces are per DIN 47 223, DIN 47 226, IEC 169-4, IEC 169-7, IEC 169-8, IEC 457-2, IEC 60169-5, IEEE 287, MIL-PRF-39012, MIL DTL-24044, MIL DTL-3643,MIL-STD-348B, where applicable

Spectrum Elektrotechnik GmbH
Germany
www.spectrum-et.com
sales@spectrum-et.com
Phone: +49 / 89 / 35 48 04 0
Fax: +49 / 89 / 35 48 04 90

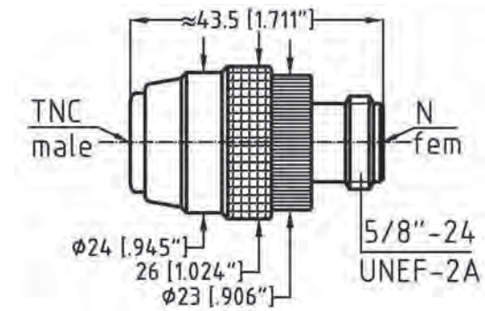

Part - No.	8001-TS61-02
Connectors	TNCA-Push. to N-fem.
Frequency	DC - 18.0 GHz
VSWR max.	1.03 + 0.005 x f (GHz)

TNC-PUSH-ON per MIL-STD-348B, full locking

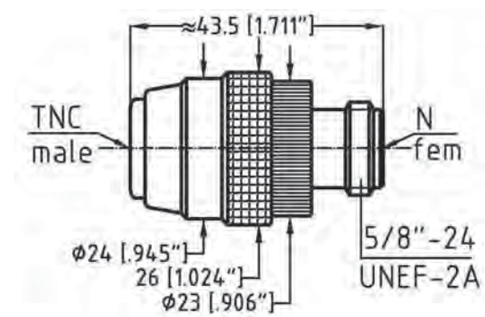

Part - No.	8U01-TS61-02
Connectors	TNCA-Push. to N-fem.
Frequency	DC - 18.0 GHz
VSWR max.	1.03 + 0.005 x f (GHz)

TNC-PUSH-ON per MIL-STD-348B, full locking for higher temperature applications.

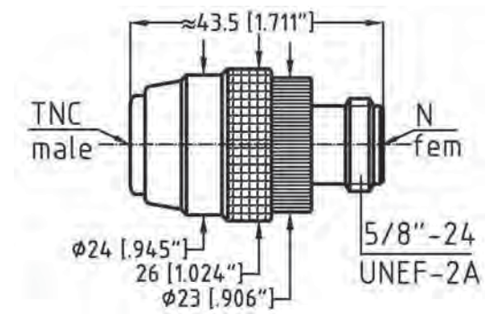

Part - No.	8001-TL61-02
Connectors	TNCA-Push. to N-fem.
Frequency	DC - 18.0 GHz
VSWR max.	1.03 + 0.005 x f (GHz)

TNC-PUSH-ON per MIL-STD-348B, full locking, but with non-locking rear nut

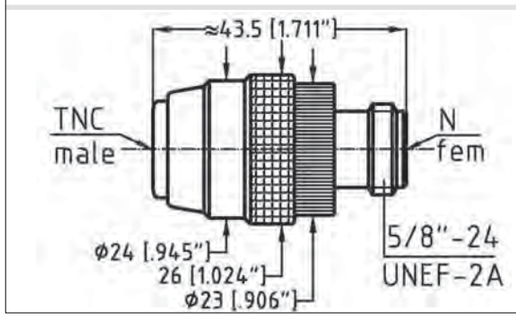

Part - No.	8U01-TL61-02
Connectors	TNCA-Push. to N-fem.
Frequency	DC - 18.0 GHz
VSWR max.	1.03 + 0.005 x f (GHz)

TNC-PUSH-ON per MIL-STD-348B, full locking, but with non-locking rear nut for higher temperature applications.

Dimensions shown are Inches over Millimeters or vice versa. Standard units have stainless finish (last 2 digits of the P/N are -02). Interfaces are per DIN 47 223, DIN 47 226, IEC 169-4, IEC 169-7, IEC 169-8, IEC 457-2, IEC 60169-5, IEEE 287, MIL-PRF-39012, MIL DTL-24044, MIL DTL-3643,MIL-STD-348B, where applicable

Spectrum Elektrotechnik GmbH
Germany
www.spectrum-et.com
sales@spectrum-et.com
Phone: +49 / 89 / 35 48 04 0
Fax: +49 / 89 / 35 48 04 90

Part - No.	8901-TS61-02
Connectors	**TNC-Push to N-fem.**
Frequency	DC - 12.4 GHz
VSWR max.	1.03 + 0.005 x f (GHz)

TNC-PUSH-ON per MIL-STD-348B, full locking

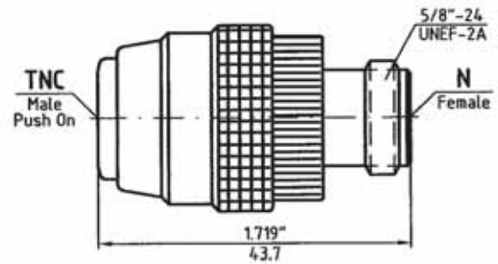

Part - No.	89U1-TS61-02
Connectors	**TNC-Push to N-fem.**
Frequency	DC - 12.4 GHz
VSWR max.	1.03 + 0.005 x f (GHz)

TNC-PUSH-ON per MIL-STD-348B, full locking for higher temperature applications.

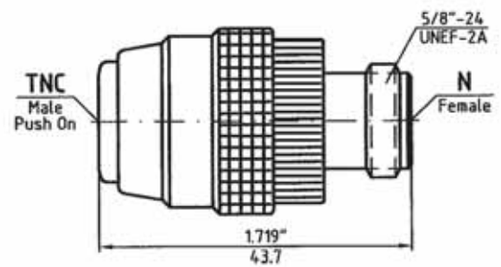

Part - No.	8901-TL61-02
Connectors	**TNC-Push to N-fem.**
Frequency	DC - 11.0 GHz
VSWR max.	1.03 + 0.005 x f (GHz)

TNC-PUSH-ON per MIL-STD-348B, full locking, but with non-locking rear nut.

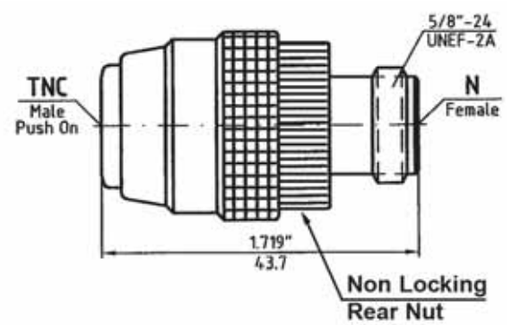

Although our catalog incorporates a very comprehensive range of products, due to our program of continuous development, there is no way that it will contain every product we manufacture. Please consult the factory for the product you require.

Dimensions shown are Inches over Millimeters or vice versa. Standard units have stainless finish (last 2 digits of the P/N are -02). Interfaces are per DIN 47 223, DIN 47 226, IEC 169-4, IEC 169-7, IEC 169-8, IEC 457-2, IEC 60169-5, IEEE 287, MIL-PRF-39012, MIL DTL-24044, MIL DTL-3643,MIL-STD-348B, where applicable

Spectrum Elektrotechnik GmbH
Germany
www.spectrum-et.com
sales@spectrum-et.com
Phone: +49 / 89 / 35 48 04 0
Fax: +49 / 89 / 35 48 04 90

Part - No.	8001-TN61-02
Connectors	**TNC-Push to N-fem.**
Frequency	DC - 18.0 GHz
VSWR max.	1.03 + 0.005 x f (GHz)

TNC-SLIDE-ON per MIL-STD-348B, non locking

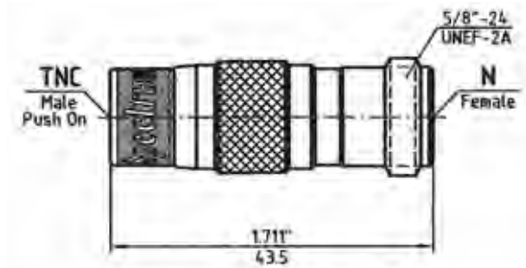

Part - No.	8U01-TN61-02
Connectors	**TNC-Push to N-fem.**
Frequency	DC - 18.0 GHz
VSWR max.	1.03 + 0.005 x f (GHz)

TNC-SLIDE-ON per MIL-STD-348B, non locking, higher temperature applications.

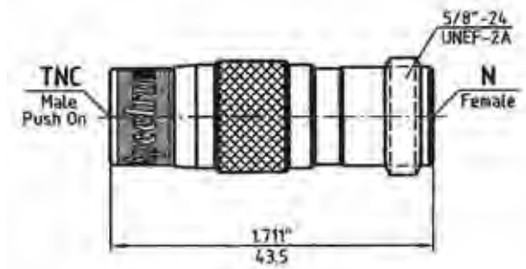

Part - No.	8901-TN61-02
Connectors	**TNC-Push to N-fem.**
Frequency	DC - 11.0 GHz
VSWR max.	1.03 + 0.005 x f (GHz)

TNC-SLIDE-ON per MIL-STD-348B, non locking

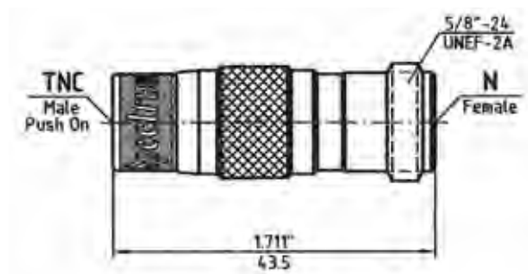

Part - No.	89U1-TN61-02
Connectors	**TNC-Push to N-fem.**
Frequency	DC - 11.0 GHz
VSWR max.	1.03 + 0.005 x f (GHz)

TNC-SLIDE-ON per MIL-STD-348B, non locking, higher temperature applications.

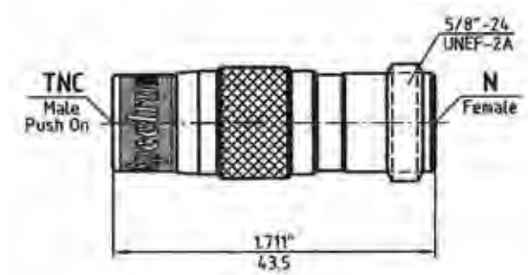

Dimensions shown are Inches over Millimeters or vice versa. Standard units have stainless finish (last 2 digits of the P/N are -02). Interfaces are per DIN 47 223, DIN 47 226, IEC 169-4, IEC 169-7, IEC 169-8, IEC 457-2, IEC 60169-5, IEEE 287, MIL-PRF-39012, MIL DTL-24044, MIL DTL-3643,MIL-STD-348B, where applicable

Spectrum Elektrotechnik GmbH
Germany
www.spectrum-et.com
sales@spectrum-et.com
Phone: +49 / 89 / 35 48 04 0
Fax: +49 / 89 / 35 48 04 90

TNCA-Push-On-male to SMA-female

D
D

Part - No.	8001-TS21-02
Connectors	TNCA-Push. to SMA-fem.
Frequency	DC - 18.0 GHz
VSWR max.	1.03 + 0.005 x f (GHz)

TNC-PUSH-ON per MIL-C-87104/2, full locking

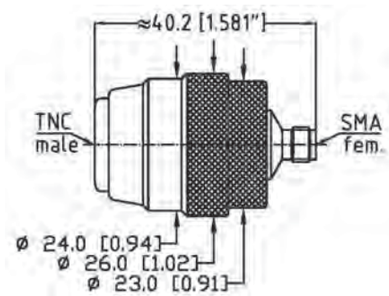

Part - No.	8U01-TS21-02
Connectors	TNCA-Push. to SMA-fem.
Frequency	DC - 18.0 GHz
VSWR max.	1.03 + 0.005 x f (GHz)

TNC-PUSH-ON per MIL-C-87104/2, full locking for higher temperature applications.

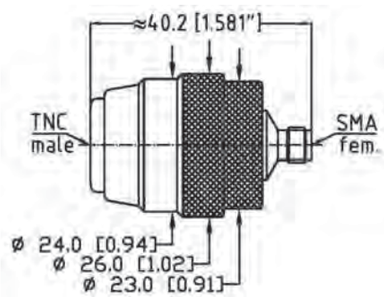

Although our catalog incorporates a very comprehensive range of products, due to our program of continuous development, there is no way that it will contain every product we manufacture. Please consult the factory for the product you require.

Dimensions shown are Inches over Millimeters or vice versa. Standard units have stainless finish (last 2 digits of the P/N are -02). Interfaces are per DIN 47 223, DIN 47 226, IEC 169-4, IEC 169-7, IEC 169-8, IEC 457-2, IEC 60169-5, IEEE 287, MIL-PRF-39012, MIL DTL-24044, MIL DTL-3643,MIL-STD-348B, where applicable

Spectrum Elektrotechnik GmbH
Germany
www.spectrum-et.com
sales@spectrum-et.com
Phone: +49 / 89 / 35 48 04 0
Fax: +49 / 89 / 35 48 04 90

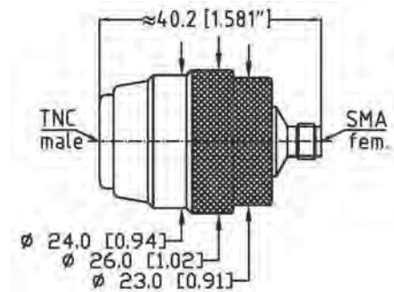

Part - No.	8002-TS21-02
Connectors	TNCA-Push. to SMA-fem.
Frequency	DC - 18.0 GHz
VSWR max.	1.03 + 0.005 x f (GHz)

8U02-TS21-02 for higher temp. applications

TNC-PUSH-ON per MIL-STD-348B, full locking

D
D

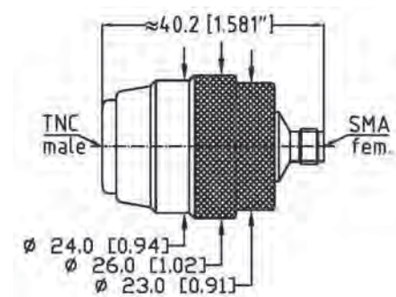

Part - No.	8001-TL21-02
Connectors	TNCA-Push. to SMA-fem.
Frequency	DC - 18.0 GHz
VSWR max.	1.03 + 0.005 x f (GHz)

TNC-PUSH-ON per MIL-STD-348B, full locking with non-locking rear nut

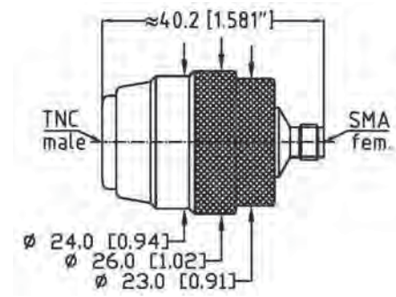

Part - No.	8U01-TL21-02
Connectors	TNCA-Push. to SMA-fem.
Frequency	DC - 18.0 GHz
VSWR max.	1.03 + 0.005 x f (GHz)

TNC-PUSH-ON per per MIL-STD-348B, full locking with non-locking rear nut for higher temperature applications.

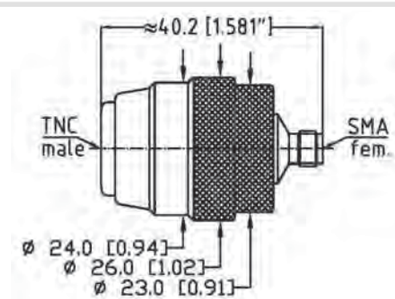

Part - No.	8901-TS21-02
Connectors	TNCA-Push. to SMA-fem.
Frequency	DC - 12.4 GHz
VSWR max.	1.03 + 0.005 x f (GHz)

TNC-PUSH-ON per MIL-STD-348B, full locking

Dimensions shown are Inches over Millimeters or vice versa. Standard units have stainless finish (last 2 digits of the P/N are -02). Interfaces are per DIN 47 223, DIN 47 226, IEC 169-4, IEC 169-7, IEC 169-8, IEC 457-2, IEC 60169-5, IEEE 287, MIL-PRF-39012, MIL DTL-24044, MIL DTL-3643,MIL-STD-348B, where applicable

Spectrum Elektrotechnik GmbH
Germany
www.spectrum-et.com
sales@spectrum-et.com
Phone: +49 / 89 / 35 48 04 0
Fax: +49 / 89 / 35 48 04 90

TNC-Push-On-male to SMA-female

D
D

Part - No.	8901-TL21-02
Connectors	TNC-Push. to SMA-fem.
Frequency	DC - 11.0 GHz
VSWR max.	1.03 + 0.005 x f (GHz)

TNC-PUSH-ON per MIL-STD-348B, full locking with non-locking rear nut.

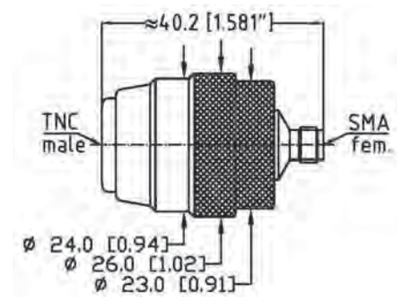

Part - No.	89U1-TL21-02
Connectors	TNC-Push. to SMA-fem.
Frequency	DC - 11.0 GHz
VSWR max.	1.03 + 0.005 x f (GHz)

TNC-PUSH-ON per MIL-STD-348B, full locking with non-locking rear nut for higher temperature applications.

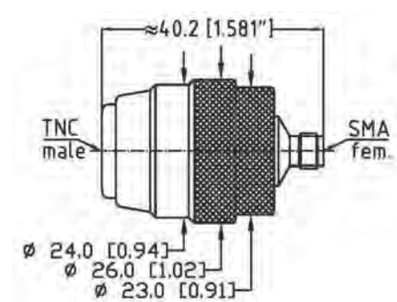

You do not find the Adapter you need for an application? You need technical support? You need price and delivery information? Please contact your nearest Spectrum Representative, or please contact us direct.

Telephone: +49-89-3548-040 Facsimile: +49-89-3548-0490
e-mail: sales@spectrum-et.com www.spectrum-et.com

Dimensions shown are Inches over Millimeters or vice versa. Standard units have stainless finish (last 2 digits of the P/N are -02). Interfaces are per DIN 47 223, DIN 47 226, IEC 169-4, IEC 169-7, IEC 169-8, IEC 457-2, IEC 60169-5, IEEE 287, MIL-PRF-39012, MIL DTL-24044, MIL DTL-3643,MIL-STD-348B, where applicable

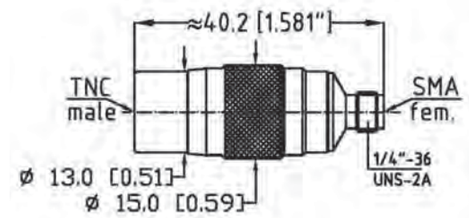

Part - No.	8001-TN21-02
Connectors	TNC-Push. to SMA-fem
Frequency	DC - 18.0 GHz
VSWR max.	1.03 + 0.005 x f (GHz)

TNC-SLIDE-ON per MIL-STD-348B, non locking

D
D

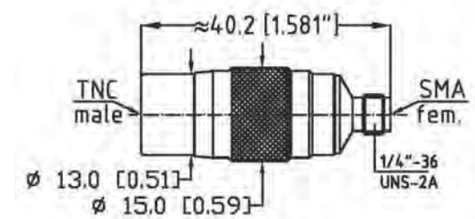

Part - No.	8U01-TN21-02
Connectors	TNC-Push. to SMA-fem.
Frequency	DC - 18.0 GHz
VSWR max.	1.03 + 0.005 x f (GHz)

TNC-SLIDE-ON per MIL-STD-348B, non locking, higher temperature applications.

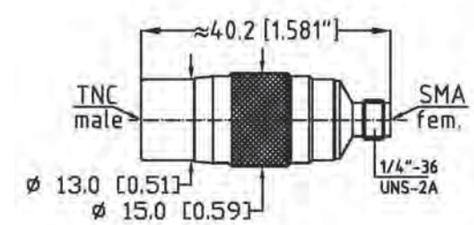

Part - No.	8901-TN21-02
Connectors	TNC-Push. to SMA-fem.
Frequency	DC - 11.0 GHz
VSWR max.	1.03 + 0.005 x f (GHz)

TNC-SLIDE-ON per MIL-STD-348B, non locking

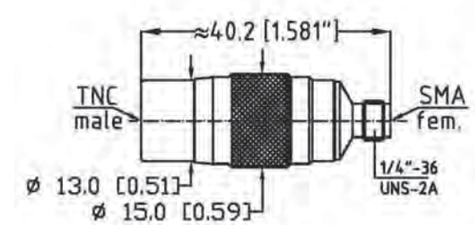

Part - No.	89U1-TN21-02
Connectors	TNC-Push. to SMA-fem.
Frequency	DC - 11.0 GHz
VSWR max.	1.03 + 0.005 x f (GHz)

TNC-SLIDE-ON per MIL-STD-348B, non locking, higher temperature applications.

Dimensions shown are Inches over Millimeters or vice versa. Standard units have stainless finish (last 2 digits of the P/N are -02). Interfaces are per DIN 47 223, DIN 47 226, IEC 169-4, IEC 169-7, IEC 169-8, IEC 457-2, IEC 60169-5, IEEE 287, MIL-PRF-39012, MIL DTL-24044, MIL DTL-3643,MIL-STD-348B, where applicable

Procedure for how to use the SMA male and SMA female Push-On connectors. SMA Push-On Connectors mate with any standard connector of the same but opposite connector style.

DD

1. Convert your standard cable assembly into a Push-On Assembly by threading the standard female side of the adapter onto the male connector of the assembly.

2. Your standard SMA male cable assembly is converted into an SMA male Push-On Assembly.

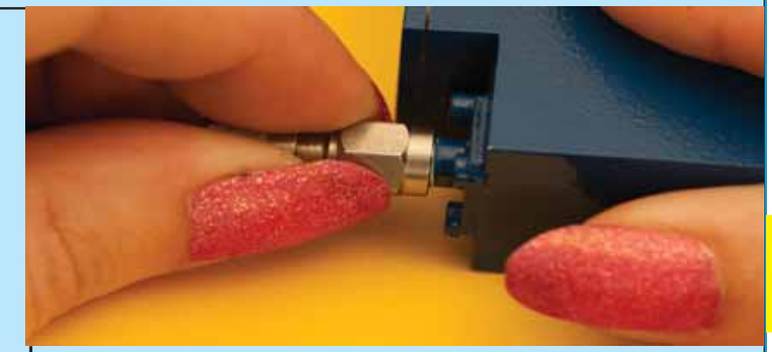

3. Just slide the Push-On SMA male Connector onto any standard SMA female. The connection is securely completed in seconds.

DD

4. To disconnect, just pull the connector off.

Spectrum Elektrotechnik GmbH

Please contact us at:
www.spectrum-et.com
Email: sales@spectrum-et.com
Phone: +49-89-3548-040
Fax: +49-89-3548-0490

Spectrum Elektrotechnik GmbH

1. Convert your standard cable assembly into a Push-On Assembly by threading the standard female side of the adapter onto the male connector of the assembly.

2. Your standard SMA male cable assembly is converted to a Push-On SMA female Cable Assembly.

3. Just slide the Push-On SMA female Connector onto any standard SMA male. The connection is securely done in seconds.

4. To disconnect, just pull the connector off.

Spectrum Elektrotechnik GmbH Germany | www.spectrum-et.com sales@spectrum-et.com | Phone: +49 / 89 / 35 48 04 0 Fax: +49 / 89 / 35 48 04 90

The Push-On 'Connector Saver' was developed to eliminate the time consuming tightening, torquing and loosening of connectors during test.
The Push-On end of the adapter slides directly onto any standard female of the same connector series, allowing quick connecting and disconnecting.

Advantages

- • • • • • • • Long Life
- • • • • • DC - 26.5 GHz
- • • • Connector Saver
- • • • • • Low Return Loss
- • • • • Reduced Test Times
- • • • Repeatable Performance
- • • Safe Locking Mechanism
- • Connector Saver to Type SMA

Electrical:

Impedance	50 Ohms nominal
Frequency Range	same as standard series
Max. VSWR	same as standard series
Insertion Loss	same as standard series
Contact Resistance	same as standard series
Diel. Withstanding.	same as standard series
RF High Potential	same as standard series
Corona Level Voltage	same as standard series

Mechanical:

Temperature	Rating -65°C to +70°C, or +150°C respectively for higher temperature units
Durability	500 mating cycles min.

Materials:

Body	Stainless Steel
Center Contact	Beryllium Copper
Outer Conductor	Beryllium Copper and/or stainless steel respectively
Dielectric	TFE Fluorocarbon per DIN 52900 (ASTM-D-1710), or Thermoplast per DIN EN ISO 10350, or PEI per in-house specification respectively for higher temperature applications.

Finish:

Center Contact	Gold Plate per ASTM-B-488, Type III, Code C, Class 1.25
Body	passivate per QQ-P-35, spring finger .00003 inch (0.8 µm) min. gold plating per MIL-DTL-45204,

Dimensions shown are Inches over Millimeters or vice versa. Standard units have stainless finish (last 2 digits of the P/N are -02). Interfaces are per DIN 47 223, DIN 47 226, IEC 169-4, IEC 169-7, IEC 169-8, IEC 457-2, IEC 60169-5, IEEE 287, MIL-PRF-39012, MIL DTL-24044, MIL DTL-3643,MIL-STD-348B, where applicable

Spectrum Elektrotechnik GmbH
Germany
www.spectrum-et.com
sales@spectrum-et.com
Phone: +49 / 89 / 35 48 04 0
Fax: +49 / 89 / 35 48 04 90

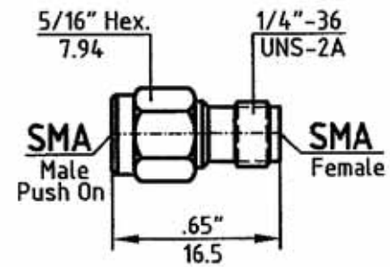

Part - No.	8001-SM21-02
Connectors	SMA-Push-m to SMA-fem.
Frequency	DC - 26.5 GHz
VSWR max.	1.20 : 1

SMA - PUSH-ON-male non locking

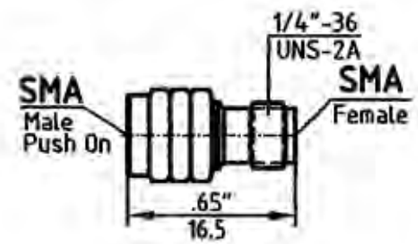

Part - No.	8003-SM21-02
Connectors	SMA-Push-m to SMA-fem.
Frequency	DC - 26.5 GHz
VSWR max.	1.20 : 1

SMA - PUSH-ON-male non locking

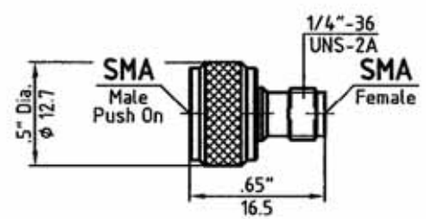

Part - No.	8005-SM21-02
Connectors	SMA-Push-m to SMA-fem.
Frequency	DC - 26.5 GHz
VSWR max.	1.20 : 1

SMA - PUSH-ON-male non locking

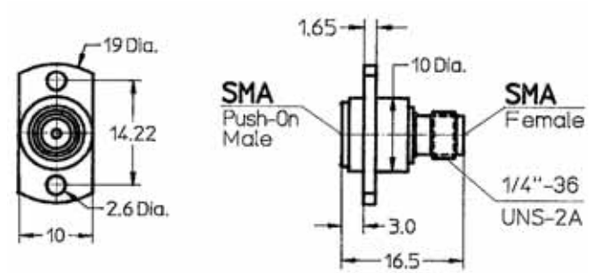

Part - No.	8004-SM21-02
Connectors	SMA-Push-m to SMA-fem.
Frequency	DC - 26.5 GHz
VSWR max.	1.20 : 1

SMA - PUSH-ON-male non locking

2-hole flange mount, floating rear mount connector

Dimensions shown are Inches over Millimeters or vice versa. Standard units have stainless finish (last 2 digits of the P/N are -02). Interfaces are per DIN 47 223, DIN 47 226, IEC 169-4, IEC 169-7, IEC 169-8, IEC 457-2, IEC 60169-5, IEEE 287, MIL-PRF-39012, MIL DTL-24044, MIL DTL-3643,MIL-STD-348B, where applicable

Spectrum Elektrotechnik GmbH
Germany
www.spectrum-et.com
sales@spectrum-et.com
Phone: +49 / 89 / 35 48 04 0
Fax: +49 / 89 / 35 48 04 90

Part - No. 8008-SM21-02

Connectors	SMA-Push-m to SMA-fem.
Frequency	DC - 26.5 GHz
VSWR max.	1.03 + 0.005 x f(GHz)

SMA - PUSH-ON-male, non locking

The SMA-male Push-On mates with any SMA-female
The coupling nut has a limited thread. With about one turn the coupling nut locks onto the female.

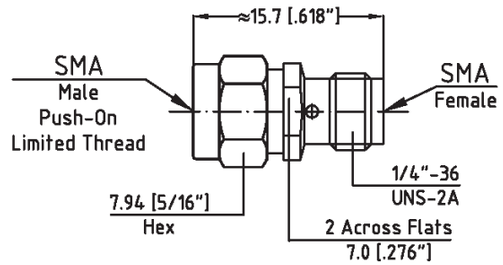

Part - No. 8M08-SM21-02

Connectors	SMA-Push-m to SMA-fem.
Frequency	DC - 26.5 GHz
VSWR max.	1.03 + 0.005 x f(GHz)

SMA - PUSH-ON-male, non locking

The Adapter is identical to the product 8008-SM21-02 with exception of the Maxi-Nut in place of the regular coupling nut.

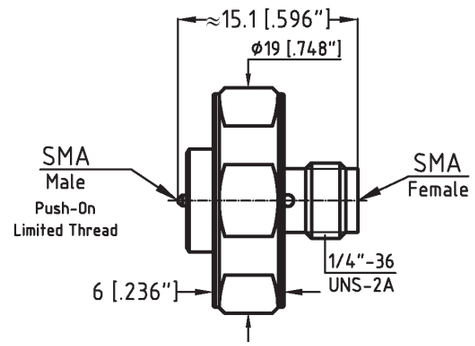

Part - No. 8006-SM21-02

Connectors	SMA-Push-m to SMA-fem.
Frequency	DC - 26.5 GHz
VSWR max.	1.03 + 0.005 x f(GHz)

SMA - PUSH-ON-male full locking

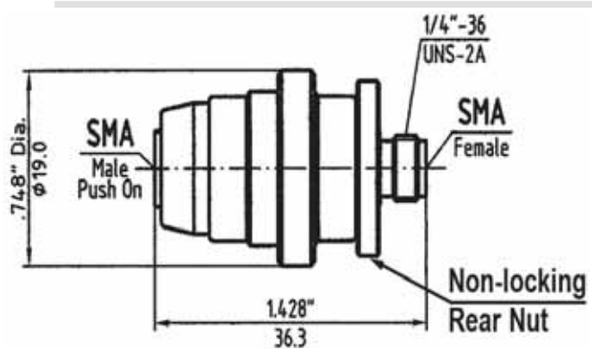

Part - No. 8007-SM21-02

Connectors	SMA-Push-m to SMA-fem.
Frequency	DC - 18.0 GHz
VSWR max.	1.03 + 0.005 x f(GHz)

SMA - PUSH-ON-male, non locking

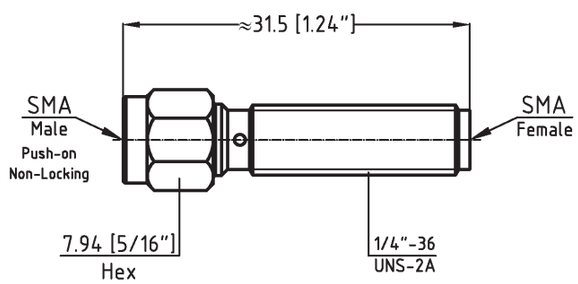

Part - No. 8009-SM21-02

Connectors	SMA-Push-m to SMA-fem.
Frequency	DC - 18.0 GHz
VSWR max.	1.03 + 0.005 x f(GHz)

SMA - PUSH-ON-male, non locking

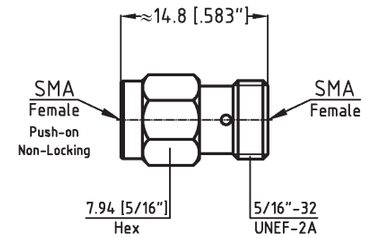

Part - No. 8010-SM21-02

Connectors	SMA-Push-m to SMA-fem.
Frequency	DC - 18.0 GHz
VSWR max.	1.03 + 0.005 x f(GHz)

SMA - PUSH-ON-male, non locking

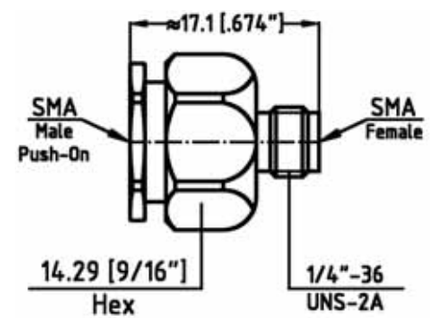

Part - No. 8012-SM21-02

Connectors	SMA-Push-m to SMA-fem.
Frequency	DC - 18.0 GHz
VSWR max.	1.03 + 0.005 x f(GHz)

SMA - PUSH-ON-male, non locking

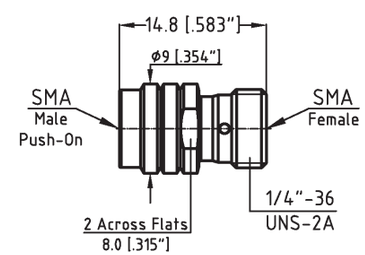

Part - No. 8013-SM21-02

Connectors	SMA-Push-m to SMA-fem.
Frequency	DC - 18.0 GHz
VSWR max.	1.03 + 0.005 x f(GHz)

SMA - PUSH-ON-male, non locking

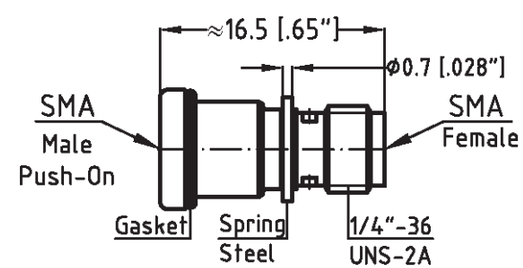

Part - No.	8016-SM21-02
Connectors	SMA-Push-m to SMA-fem.
Frequency	DC - 18.0 GHz
VSWR max.	1.03 + 0.005 x f(GHz)

SMA - PUSH-ON-male, full locking
In development

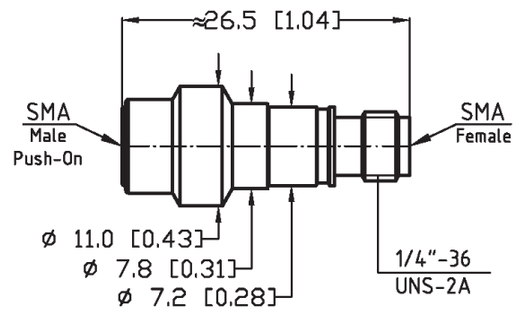

Part - No.	8001-SF21-02
Connectors	SMA-Push-fem. to SMA-fem.
Frequency	DC - 18.0 GHz
VSWR max.	1.03 + 0.005 x f(GHz)

SMA - PUSH-ON-female, non locking

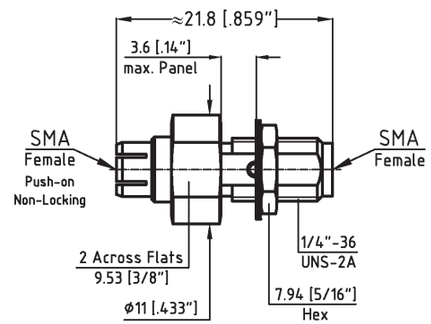

Part - No.	8002-SF21-02
Connectors	SMA-Push-fem. to SMA-fem.
Frequency	DC - 18.0 GHz
VSWR max.	1.03 + 0.005 x f(GHz)

SMA - PUSH-ON-female, non locking

Shorter Push-On range, compared to 8001-SF21-02

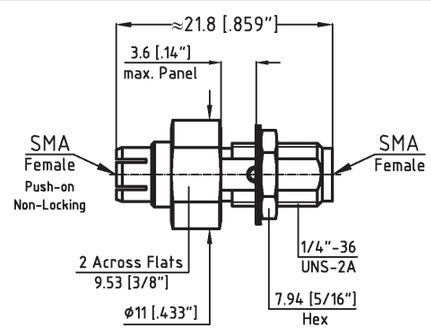

Part - No.	8001-SM11-02
Connectors	SMA-Push-m to SMA-male
Frequency	DC - 18.0 GHz
VSWR max.	1.03 + 0.005 x f(GHz)

SMA - PUSH-ON-male, non locking

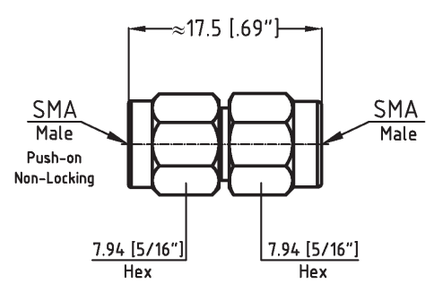

Dimensions shown are Inches over Millimeters or vice versa. Standard units have stainless finish (last 2 digits of the P/N are -02). Interfaces are per DIN 47 223, DIN 47 226, IEC 169-4, IEC 169-7, IEC 169-8, IEC 457-2, IEC 60169-5, IEEE 287, MIL-PRF-39012, MIL DTL-24044, MIL DTL-3643,MIL-STD-348B, where applicable

Spectrum Elektrotechnik GmbH
Germany
www.spectrum-et.com
sales@spectrum-et.com
Phone: +49 / 89 / 35 48 04 0
Fax: +49 / 89 / 35 48 04 90

TNC Push-On-male Reverse Sex to N-female

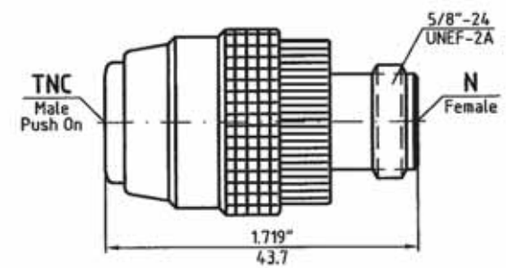

Part - No.	8RP1-TL61-02
Connectors	TNC-Push-fem. to N-fem.
Frequency	DC - 18.0 GHz
VSWR max.	1.03 + 0.005 x f (GHz)

TNC - PUSH-ON-male, full locking with non-locking rear nut

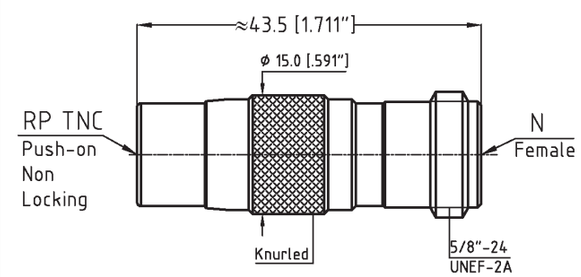

Part - No.	8RP1-TN61-02
Connectors	TNC-Push-fem. to N-fem.
Frequency	DC - 18.0 GHz
VSWR max.	1.03 + 0.005 x f (GHz)

TNC - PUSH-ON-male, non locking

Although our catalog incorporates a very comprehensive range of products, due to our program of continuous development, there is no way that it will contain every product we manufacture. Please consult the factory for the product you require.

Telephone: +49-89-3548-040 Facsimile: +49-89-3548-0490
E-mail: sales@spectrum-et.com www.spectrum-et.com

Dimensions shown are Inches over Millimeters or vice versa. Standard units have stainless finish (last 2 digits of the P/N are -02). Interfaces are per DIN 47 223, DIN 47 226, IEC 169-4, IEC 169-7, IEC 169-8, IEC 457-2, IEC 60169-5, IEEE 287, MIL-PRF-39012, MIL DTL-24044, MIL DTL-3643,MIL-STD-348B, where applicable

Spectrum Elektrotechnik GmbH
Germany
www.spectrum-et.com
sales@spectrum-et.com
Phone: +49 / 89 / 35 48 04 0
Fax: +49 / 89 / 35 48 04 90

SMA Push-On-male Reverse Sex to SMA-female

D
D

Part - No.	8004-RM21-02
Connectors	SMA-male to SMA-fem.
Frequency	DC - 18.0 GHz
VSWR max.	1.03 + 0.005 x f (GHz)

Floating SMA-m reverse sex PUSH-ON, non locking

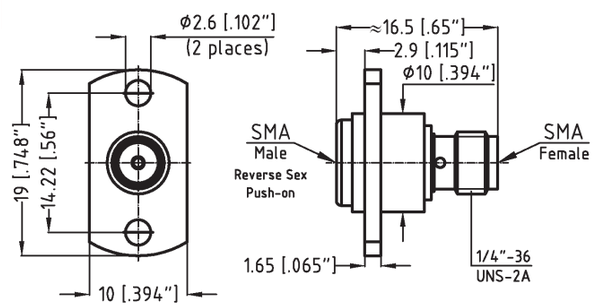

Part - No.	8001-RM21-02
Connectors	SMA-male to SMA-fem.
Frequency	DC - 18.0 GHz
VSWR max.	1.03 + 0.005 x f (GHz)

SMA-m reverse sex PUSH-ON non locking

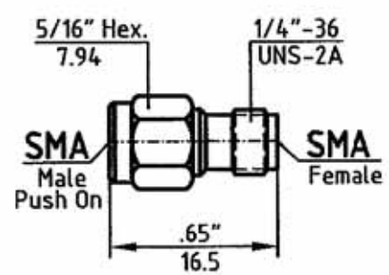

Part - No.	8003-SM99-02
Connectors	SMA-male to SMA-fem.
Frequency	DC - 18.0 GHz
VSWR max.	1.03 + 0.005 x f (GHz)

SMA-m reverse sex PUSH-ON non locking

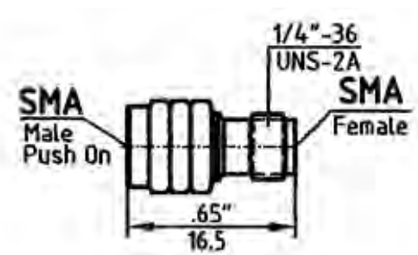

Dimensions shown are Inches over Millimeters or vice versa. Standard units have stainless finish (last 2 digits of the P/N are -02). Interfaces are per DIN 47 223, DIN 47 226, IEC 169-4, IEC 169-7, IEC 169-8, IEC 457-2, IEC 60169-5, IEEE 287, MIL-PRF-39012, MIL DTL-24044, MIL DTL-3643,MIL-STD-348B, where applicable

Spectrum Elektrotechnik GmbH
Germany
www.spectrum-et.com
sales@spectrum-et.com
Phone: +49 / 89 / 35 48 04 0
Fax: +49 / 89 / 35 48 04 90

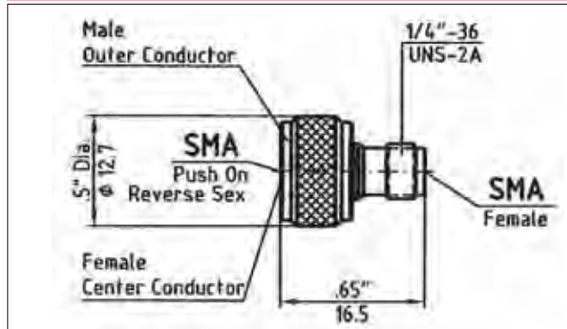

Part - No.	8005-RM21-02
Connectors	SMA-male to SMA-fem.
Frequency	DC - 18.0 GHz
VSWR max.	1.03 + 0.005 x f (GHz)

SMA-m reverse sex PUSH-ON non locking

D
D

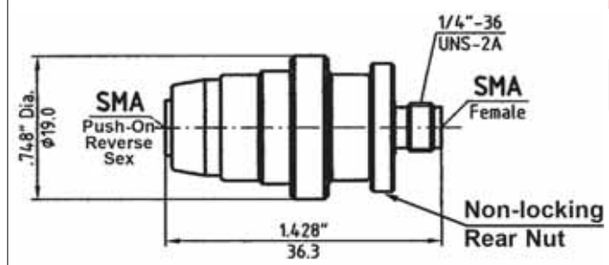

Part - No.	8006-RM21-02
Connectors	SMA-male to SMA-fem.
Frequency	DC - 18.0 GHz
VSWR max.	1.03 + 0.005 x f (GHz)

SMA-m reverse sex PUSH-ON full locking

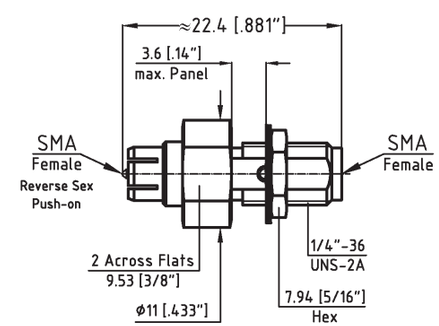

Part - No.	8001-RF21-02
Connectors	SMA-fem. to SMA-fem.
Frequency	DC - 18.0 GHz
VSWR max.	1.03 + 0.005 x f (GHz)

SMA-m reverse sex PUSH-ON non locking

You do not find the Adapter you need for an application? You need technical support? You need price and delivery information? Please contact your nearest Spectrum Representative, or please contact us direct.

Telephone: +49-89-3548-040 Facsimile: +49-89-3548-0490
e-mail: sales@spectrum-et.com www.spectrum-et.com

Dimensions shown are Inches over Millimeters or vice versa. Standard units have stainless finish (last 2 digits of the P/N are -02). Interfaces are per DIN 47 223, DIN 47 226, IEC 169-4, IEC 169-7, IEC 169-8, IEC 457-2, IEC 60169-5, IEEE 287, MIL-PRF-39012, MIL DTL-24044, MIL DTL-3643,MIL-STD-348B, where applicable

Spectrum Elektrotechnik GmbH
Germany
www.spectrum-et.com
sales@spectrum-et.com
Phone: +49 / 89 / 35 48 04 0
Fax: +49 / 89 / 35 48 04 90

Part - No.	8001-FP4B-02
Connectors	F-male to TNC-fem.
Frequency	DC - 1.0 GHz
VSWR max.	1.10+ 0.005 x f (GHz)

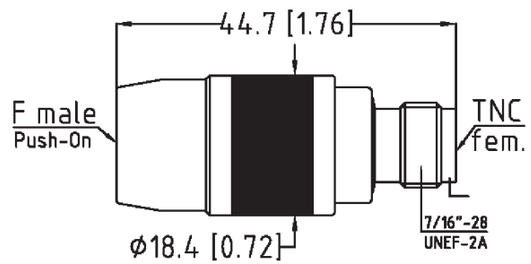

Part - No.	8002-FP4B-02
Connectors	F-male to TNC-fem.
Frequency	DC - 1.0 GHz
VSWR max.	1.10 + 0.005 x f (GHz)

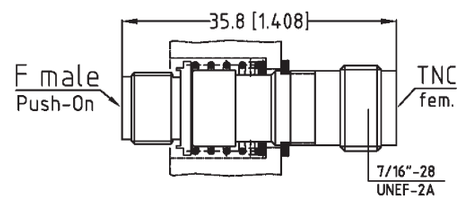

Dimensions shown are Inches over Millimeters or vice versa. Standard units have stainless finish (last 2 digits of the P/N are -02). Interfaces are per DIN 47 223, DIN 47 226, IEC 169-4, IEC 169-7, IEC 169-8, IEC 457-2, IEC 60169-5, IEEE 287, MIL-PRF-39012, MIL DTL-24044, MIL DTL-3643,MIL-STD-348B, where applicable

Spectrum Elektrotechnik GmbH
Germany
www.spectrum-et.com
sales@spectrum-et.com
Phone: +49 / 89 / 35 48 04 0
Fax: +49 / 89 / 35 48 04 90

In-Series and Between-Series Adapters Hermetically Sealed

If your choice of Hermetically Sealed Adapters is not shown in this section, please refer to the Table below to determine other possible locations. Should you not find your adapter listed in any section, please consult the factory or your Spectrum Elektrotechnik Area Representative.

Hermetically Sealed Adapters	Section	Page
Hermetically Sealed Adapters Overview	EE	1
1.85mm In-Series	EE	4
2.4mm In-Series	EE	5
2.92mm In-Series	EE	6
N In-Series	EE	7
Between Series N to TNC	EE	10
TNC In-Series	EE	11

Although our catalog incorporates a very comprehensive range of products, due to our program of continuous development, there is no way that it will contain every product we manufacture. Please consult the factory for the product you require.
To improve our Standard Products we reserve the right to make changes. Specifications are therefore subject to change without notice.

Dimensions shown are Inches over Millimeters or vice versa. Standard units have stainless finish (last 2 digits of the P/N are -02). Interfaces are per DIN 47 223, DIN 47 226, IEC 169-4, IEC 169-7, IEC 169-8, IEC 457-2, IEC 60169-5, IEEE 287, MIL-PRF-39012, MIL DTL-24044, MIL DTL-3643,MIL-STD-348B, where applicable

Spectrum Elektrotechnik GmbH
Germany
www.spectrum-et.com
sales@spectrum-et.com
Phone: +49 / 89 / 35 48 04 0
Fax: +49 / 89 / 35 48 04 90

Spectrum Elektrotechnik GmbH offers a wide range of hermetically sealed adapters to the hermeticity of 10-8 atm. cm³/s minimum. The Adapters use fused in glass seals between center contact and outer conductor. This ensures complete hermeticity of the units. The adapters are normally used at vacuum chambers testing products that are used for testing products for outer space applications and the personnel staying outside the chamber at regular environment. Available connector styles are 1.85mm, 2.4mm, 2.92mm, N and TNC, other connector styles can be manufactured on request.

INTERFACE MATING DIMENSIONS: per MIL-STD-348A

REQUIREMENT	GENERAL SPECIFICATIONS
Materials	STEEL corrosion resistant 1.4305 per DIN EN 10088; ASTM-A582 (303), or 1.4404 (316L) respectively. **ASTM F 15 Alloy** (Kovar) **Borosilicate** per in-house specifications BRASS CuZn39Pb3 per DIN 17660 (QQ-B-626 (ASTM-B124), half hard). COPPER BERYLLIUM 33-25 CuBe2PbH per DIN17666(DIN CEN/TS;DIN SPEC 9700)(QQ-C530). TFE Fluorocarbon per DIN 52900 (ASTM-D-1710) SILICONE RUBBER per DIN ISO 3601)(A-A-59588,Class IIB) Gr. 50 - 75. BORIUM NITRITE Dielectric for high power applications per in-house specification **Sn95Ag4Cu1** Solder
Finish	**COPPER BERYLLIUM:** Center Contacts shall be gold plated to a minimum thickness of 0.00005 inch (1.25 µm) in accordance with ASTM-B-488, Type III, Code C, Class 1.25 **STAINLESS STEEL:** Outer conductor is gold plated to a thickness of 0.0000315 inch (0.8 µm) min. gold plating per ASTM B 488. **ASTM F 15:** Gold plated to a thickness of 0.000315 inch (0.8 µm) min. gold plating per ASTM B 488.
ELECTRICAL	
Impedance **Other:**	50 Ohms Please refer to the individual Data Sheets
ENVIRONMENTAL	
General **Temperature Range:**	Meets MIL-PRF-39012 for Corrosion (§ 3.13), Vibration (§ 3.18), Mechanical Shock (§ 3.19), Moisture Resistance The Adapters pass the Helium leak test of 10-8 (alternatively 10-5) cm³/sec at 1atm -54 C° to +115 C°

Dimensions shown are Inches over Millimeters or vice versa. Standard units have stainless finish (last 2 digits of the P/N are -02). Interfaces are per DIN 47 223, DIN 47 226, IEC 169-4, IEC 169-7, IEC 169-8, IEC 457-2, IEC 60169-5, IEEE 287, MIL-PRF-39012, MIL DTL-24044, MIL DTL-3643,MIL-STD-348B, where applicable

Spectrum Elektrotechnik GmbH
Germany
www.spectrum-et.com
sales@spectrum-et.com
Phone: +49 / 89 / 35 48 04 0
Fax: +49 / 89 / 35 48 04 90

Hermetically sealed Adapters

Hermeticity: 10^{-5} atm.cm³/s min. or 10^{-8} atm.cm³/s min.

Available 1.85 mm, 2.4 mm, 2.92 mm, TNC and N Bulkhead Feedthroughs and 4-hole flange as well with and without venting holes for Vacuum Test Chambers.

Dimensions shown are Inches over Millimeters or vice versa. Standard units have stainless finish (last 2 digits of the P/N are -02). Interfaces are per DIN 47 223, DIN 47 226, IEC 169-4, IEC 169-7, IEC 169-8, IEC 457-2, IEC 60169-5, IEEE 287, MIL-PRF-39012, MIL DTL-24044, MIL DTL-3643,MIL-STD-348B, where applicable

Spectrum Elektrotechnik GmbH
Germany
www.spectrum-et.com
sales@spectrum-et.com
Phone: +49 / 89 / 35 48 04 0
Fax: +49 / 89 / 35 48 04 90

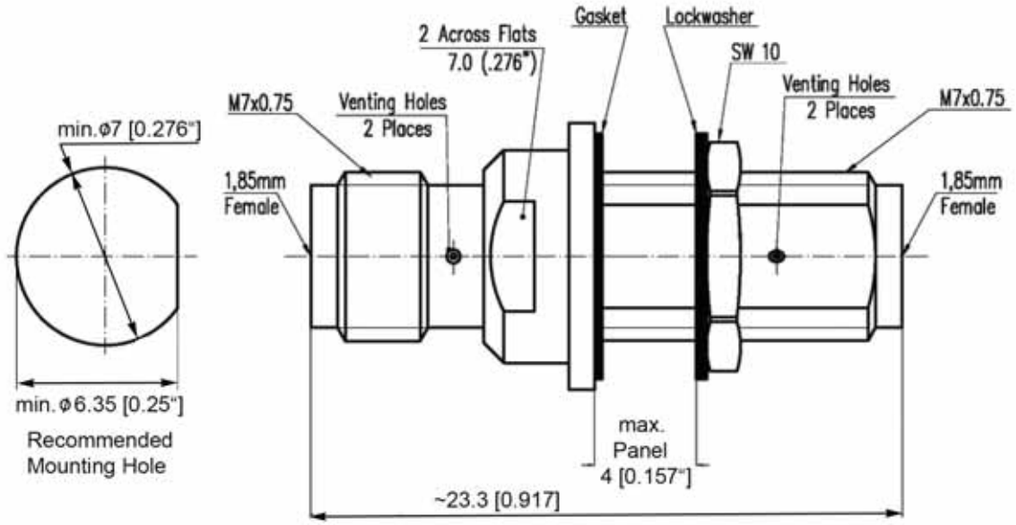

Hermeticity of 10^{-8} atm. cm³/s min.

8H0V-VFVF-00	1.85 mm female to 1.85 mm female bulkhead feedthrough, with venting holes DC to 65.0 GHz, VSWR: 1.3 : 1 typ.
8H01-VFVF-00	1.85 mm female to 1.85 mm female bulkhead feedthrough, without venting holes DC to 65.0 GHz, VSWR: 1.3 : 1 typ.

Hermeticity of 10^{-5} atm. cm³/s min.

8H1V-VFVF-00	1.85 mm female to 1.85 mm female bulkhead feedthrough, with venting holes DC to 65.0 GHz, VSWR: 1.3 : 1 typ.
8H11-VFVF-00	1.85 mm female to 1.85 mm female bulkhead feedthrough, without venting holes DC to 65.0 GHz, VSWR: 1.3 : 1 typ.

You need something different? You need technical assistance?
You will find immediate assistance from our Marketing and Engineering Team.
Please give us a call, send us a fax, or an E-mail.

Dimensions shown are Inches over Millimeters or vice versa. Standard units have stainless finish (last 2 digits of the P/N are -02). Interfaces are per DIN 47 223, DIN 47 226, IEC 169-4, IEC 169-7, IEC 169-8, IEC 457-2, IEC 60169-5, IEEE 287, MIL-PRF-39012, MIL DTL-24044, MIL DTL-3643,MIL-STD-348B, where applicable

Spectrum Elektrotechnik GmbH
Germany
www.spectrum-et.com
sales@spectrum-et.com
Phone: +49 / 89 / 35 48 04 0
Fax: +49 / 89 / 35 48 04 90

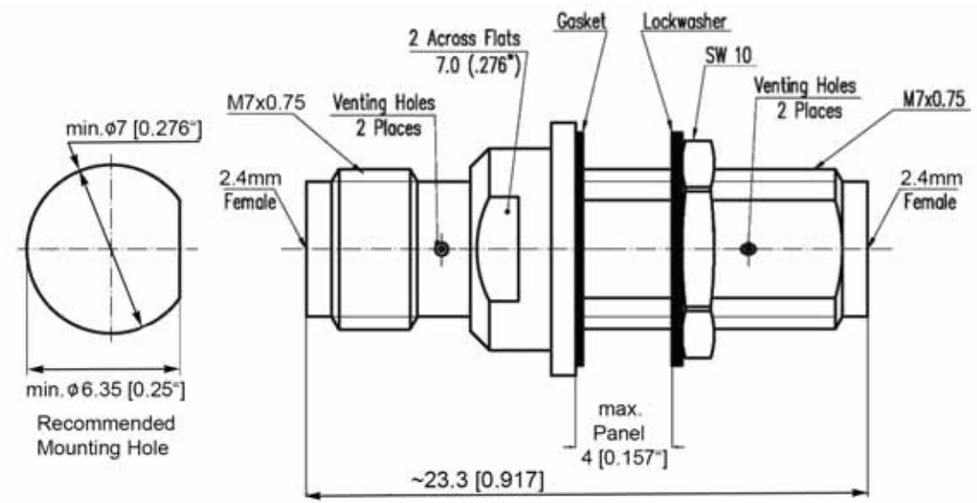

Hermeticity of 10^{-8} atm. cm³/s min.

8H0V-HFHF-00	2.4 mm female to 2.4 mm female bulkhead feedthrough, with venting holes DC to 50.0 GHz, VSWR: 1.3 : 1 typ.
8H01-HFHF-00	2.4 mm female to 2.4 mm female bulkhead feedthrough, without venting holes DC to 50.0 GHz, VSWR: 1.3 : 1 typ.

Hermeticity of 10^{-5} atm. cm³/s min.

8H1V-HFHF-00	2.4 mm female to 2.4 mm female bulkhead feedthrough, with venting holes DC to 50.0 GHz, VSWR: 1.3 : 1 typ.
8H11-HFHF-00	2.4 mm female to 2.4 mm female bulkhead feedthrough, without venting holes DC to 50.0 GHz, VSWR: 1.3 : 1 typ.

You need something different? You need technical assistance?
You will find immediate assistance from our Marketing and Engineering Team.
Please give us a call, send us a fax, or an E-mail.

Dimensions shown are Inches over Millimeters or vice versa. Standard units have stainless finish (last 2 digits of the P/N are -02). Interfaces are per DIN 47 223, DIN 47 226, IEC 169-4, IEC 169-7, IEC 169-8, IEC 457-2, IEC 60169-5, IEEE 287, MIL-PRF-39012, MIL DTL-24044, MIL DTL-3643,MIL-STD-348B, where applicable

Spectrum Elektrotechnik GmbH
Germany
www.spectrum-et.com
sales@spectrum-et.com
Phone: +49 / 89 / 35 48 04 0
Fax: +49 / 89 / 35 48 04 90

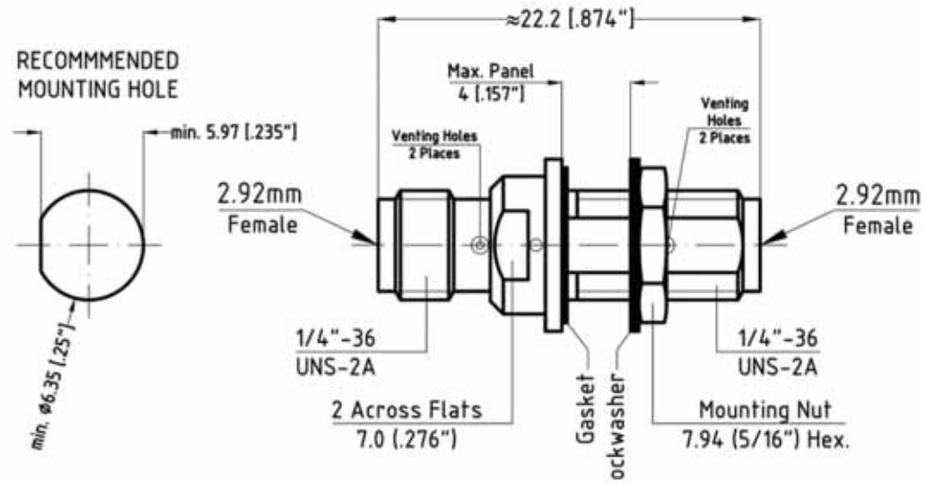

Hermeticity of 10^{-8} atm. cm³/s min.

8H0V-KFKF-00	2.92 mm female to 2.92 mm female bulkhead feedthrough, with venting holes DC to 40.0 GHz, VSWR: 1.15 : 1 typ.
8H01-KFKF-00	2.92 mm female to 2.92 mm female bulkhead feedthrough, without venting holes DC to 40.0 GHz, VSWR: 1.15 : 1 typ.

Hermeticity of 10^{-5} atm. cm³/s min.

8H1V-KFKF-00	2.92 mm female to 2.92 mm female bulkhead feedthrough, with venting holes DC to 40.0 GHz, VSWR: 1.15 : 1 typ.
8H11-KFKF-00	2.92 mm female to 2.92 mm female bulkhead feedthrough, without venting holes DC to 40.0 GHz, VSWR: 1.15 : 1 typ.

You need something different? You need technical assistance?
You will find immediate assistance from our Marketing and Engineering Team.
Please give us a call, send us a fax, or an e-mail.

Dimensions shown are Inches over Millimeters or vice versa. Standard units have stainless finish (last 2 digits of the P/N are -02). Interfaces are per DIN 47 223, DIN 47 226, IEC 169-4, IEC 169-7, IEC 169-8, IEC 457-2, IEC 60169-5, IEEE 287, MIL-PRF-39012, MIL DTL-24044, MIL DTL-3643,MIL-STD-348B, where applicable

Spectrum Elektrotechnik GmbH
Germany
www.spectrum-et.com
sales@spectrum-et.com
Phone: +49 / 89 / 35 48 04 0
Fax: +49 / 89 / 35 48 04 90

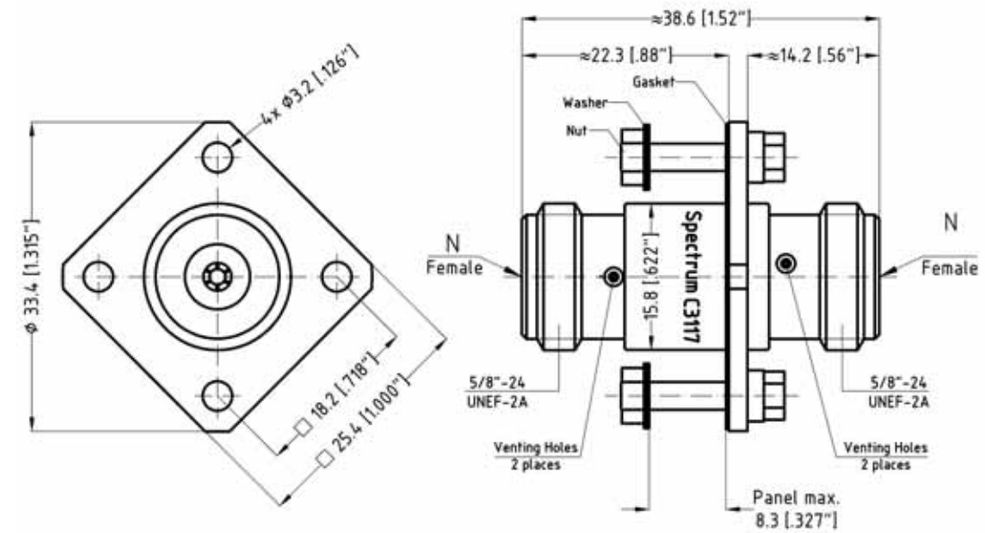

Hermeticity of 10^{-8} atm. cm³/s min.

8H0V-6161-00	N female to N female 4-Hole Flange, with venting holes DC to 18.0 GHz, VSWR: 1.15 : 1 typ.
8H01-6161-00	N female to N female 4-Hole Flange, without venting holes DC to 18.0 GHz, VSWR: 1.15 : 1 typ.
8H5V-6161-00	N female to N female, High Power 4-Hole Flange, with venting holes DC to 12.0 GHz, VSWR: 1.15 : 1 typ.
8H52-6161-00	N female to N female 4-Hole Flange, without venting holes DC to 12.0 GHz, VSWR: 1.15 : 1 typ.

Hermeticity of 10^{-5} atm. cm³/s min.

8H1V-6161-00	N female to N female 4-Hole Flange, with venting holes DC to 18.0 GHz, VSWR: 1.15 : 1 typ.
8H11-6161-00	N female to N female 4-Hole Flange. without venting holes DC to 18.0 GHz, VSWR: 1.15 : 1 typ.
8H6V-6161-00	N female to N female, High Power 4-Hole Flange, with venting holes DC to 12.0 GHz, VSWR: 1.15 : 1 typ.
8H61-6161-00	N female to N female 4-Hole Flange, without venting holes DC to 12.0 GHz, VSWR: 1.15 : 1 typ.

Dimensions shown are Inches over Millimeters or vice versa. Standard units have stainless finish (last 2 digits of the P/N are -02). Interfaces are per DIN 47 223, DIN 47 226, IEC 169-4, IEC 169-7, IEC 169-8, IEC 457-2, IEC 60169-5, IEEE 287, MIL-PRF-39012, MIL DTL-24044, MIL DTL-3643,MIL-STD-348B, where applicable

Spectrum Elektrotechnik GmbH
Germany
www.spectrum-et.com
sales@spectrum-et.com
Phone: +49 / 89 / 35 48 04 0
Fax: +49 / 89 / 35 48 04 90

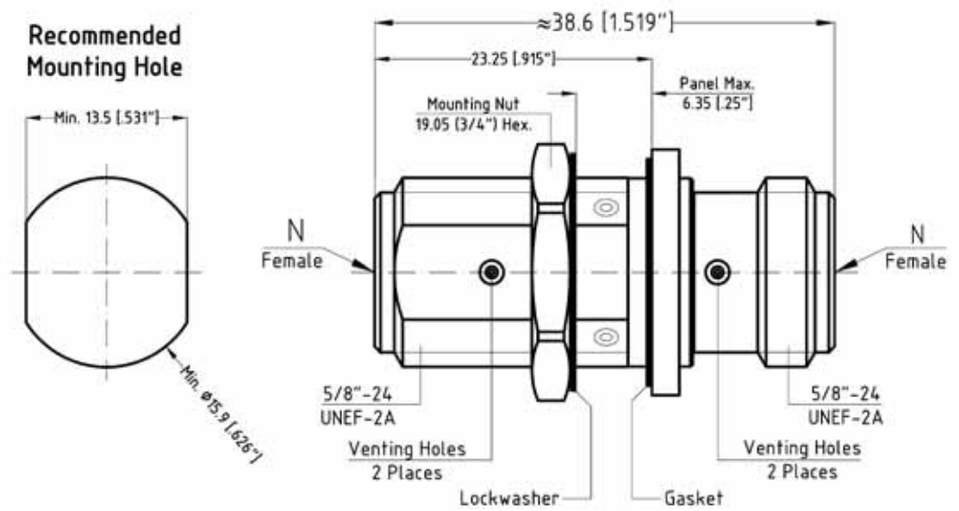

Hermeticity of 10^{-8} atm. cm³/s min.

8H0V-6061-00	N female to N female bulkhead feedthrough, with venting holes DC to 18.0 GHz, VSWR: 1.15 : 1 typ.
8H02-6061-00	N female to N female bulkhead feedthrough, without venting holes DC to 18.0 GHz, VSWR: 1.15 : 1 typ.
8H5V-6061-00	N female to N female, High Power bulkhead feedthrough, with venting holes DC to 12.0 GHz, VSWR: 1.15 : 1 typ.
t. b. d. a. r. o.	N female to N female bulkhead feedthrough, without venting holes DC to 12.0 GHz, VSWR: 1.15 : 1 typ.

Hermeticity of 10^{-5} atm. cm³/s min.

8H2V-6061-00	N female to N female bulkhead feedthrough, with venting holes DC to 18.0 GHz, VSWR: 1.15 : 1 typ.
8H12-6061-00	N female to N female bulkhead feedthrough, without venting holes DC to 18.0 GHz, VSWR: 1.15 : 1 typ.
8H6V-6061-00	N female to N female, High Power bulkhead feedthrough, with venting holes DC to 12.0 GHz, VSWR: 1.15 : 1 typ.
8H3V-6061-00	N female to N female bulkhead feedthrough, without venting holes DC to 12.0 GHz, VSWR: 1.15 : 1 typ.

Dimensions shown are Inches over Millimeters or vice versa. Standard units have stainless finish (last 2 digits of the P/N are -02). Interfaces are per DIN 47 223, DIN 47 226, IEC 169-4, IEC 169-7, IEC 169-8, IEC 457-2, IEC 60169-5, IEEE 287, MIL-PRF-39012, MIL DTL-24044, MIL DTL-3643,MIL-STD-348B, where applicable

Spectrum Elektrotechnik GmbH
Germany
www.spectrum-et.com
sales@spectrum-et.com
Phone: +49 / 89 / 35 48 04 0
Fax: +49 / 89 / 35 48 04 90

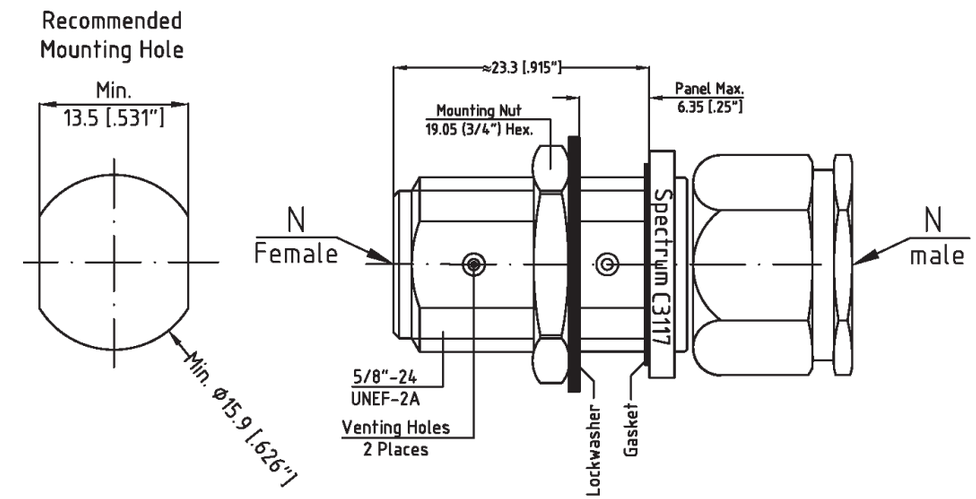

Hermeticity of 10^{-8} atm. cm³/s min.

8H0V-5160-00	N male to N female bulkhead feedthrough, with venting holes DC to 13.0 GHz; VSWR: 1.15:1 typ.
8H1V-5160-00	N male to N female bulkhead feedthrough, with venting holes DC to 13.0 GHz; VSWR: 1.15:1 typ.

Spectrum Elektrotechnik GmbH offers a wide range of cable assemblies for use in thermovac applications.

With your inquiry please advise specification needed:

- Length of the assembly and connector configuration
- Max. insertion loss vs. frequency required
- Max. VSWR vs. frequency
- Power vs. frequency

Dimensions shown are Inches over Millimeters or vice versa. Standard units have stainless finish (last 2 digits of the P/N are -02). Interfaces are per DIN 47 223, DIN 47 226, IEC 169-4, IEC 169-7, IEC 169-8, IEC 457-2, IEC 60169-5, IEEE 287, MIL-PRF-39012, MIL DTL-24044, MIL DTL-3643,MIL-STD-348B, where applicable

Spectrum Elektrotechnik GmbH
Germany
www.spectrum-et.com
sales@spectrum-et.com
Phone: +49 / 89 / 35 48 04 0
Fax: +49 / 89 / 35 48 04 90

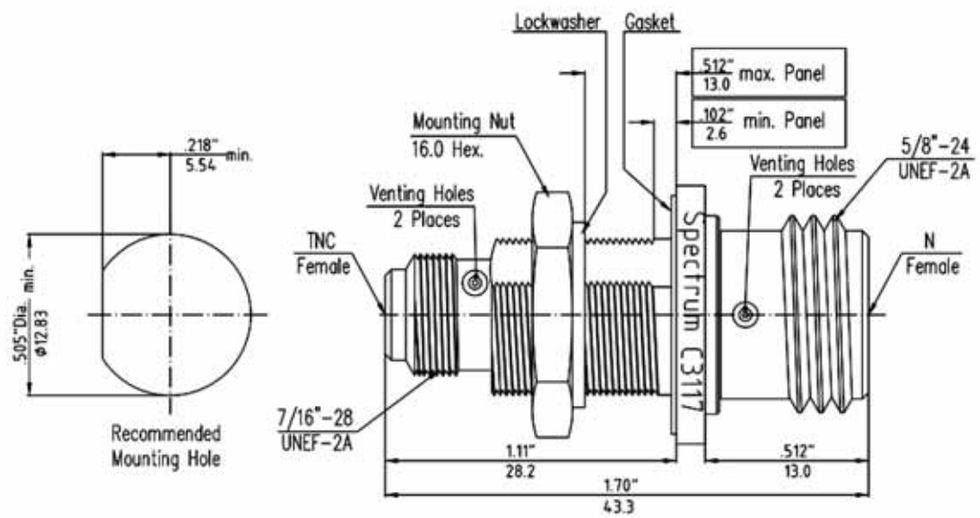

Hermeticity of 10^{-8} atm. cm³/s min.

8H0V-4161-00	TNCA female to N female bulkhead feedthrough, with venting holes DC to 18.0 GHz, VSWR: 1.15 : 1 typ.
8H01-4161-00	TNCA female to N female bulkhead feedthrough, without venting holes DC to 18.0 GHz, VSWR: 1.15 : 1 typ.

Hermeticity of 10^{-5} atm. cm³/s min.

8H1V-4161-00	TNCA female to N female bulkhead feedthrough, with venting holes DC to 18.0 GHz, VSWR: 1.15 : 1 typ.
8H11-4161-00	TNCA female to N female bulkhead feedthrough, without venting holes DC to 18.0 GHz, VSWR: 1.15 : 1 typ.

Spectrum Elektrotechnik GmbH offers a wide range of cable assemblies for use in thermovac applications. With your inquiry please advise specification needed:
- Length of the assembly and connector configuration
- Max. insertion loss vs. frequency
- Max. VSWR vs. frequency
- Power vs. frequency
- Environment, such as altitude and temperature

Dimensions shown are Inches over Millimeters or vice versa. Standard units have stainless finish (last 2 digits of the P/N are -02). Interfaces are per DIN 47 223, DIN 47 226, IEC 169-4, IEC 169-7, IEC 169-8, IEC 457-2, IEC 60169-5, IEEE 287, MIL-PRF-39012, MIL DTL-24044, MIL DTL-3643,MIL-STD-348B, where applicable

Spectrum Elektrotechnik GmbH
Germany
www.spectrum-et.com
sales@spectrum-et.com
Phone: +49 / 89 / 35 48 04 0
Fax: +49 / 89 / 35 48 04 90

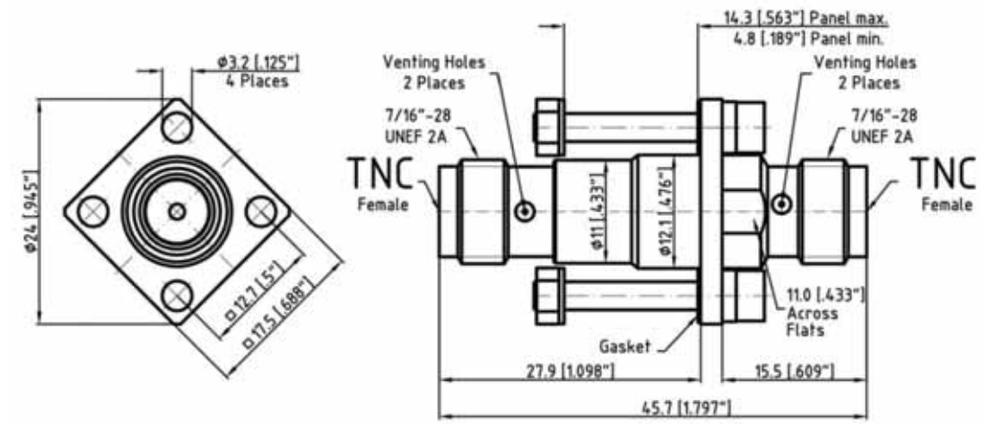

Hermeticity of 10^{-8} atm. cm³/s min.

8H0V-4141-00 [8H01-4141-00=No Venting]	TNCA female to TNC female 4-hole flange, with venting holes DC to 18.0 GHz, VSWR: 1.15 : 1 typ.
8H02-4141-00	TNCA female to TNC female 4-hole flange, without venting holes DC to 18.0 GHz, VSWR: 1.15 : 1 typ.
8H5V-4141-00	TNCA female to TNC female, High Power 4-hole flange, with venting holes, DC to 12.0 GHz, VSWR: 1.15 : 1 typ.
8H52-4141-00	TNCA female to TNC female, High Power 4-hole flange, without venting holes, DC to 12.0 GHz, VSWR: 1.15 : 1 typ.

Hermeticity of 10^{-5} atm. cm³/s min.

8H2V-4141-00	TNCA female to TNC female 4-hole flange, with venting holes DC to 18.0 GHz, VSWR: 1.15 : 1 typ.
8H12-4141-00	TNCA female to TNC female 4-hole flange, without venting holes DC to 18.0 GHz, VSWR: 1.15 : 1 typ.
8H7V-4141-00	TNCA female to TNC female, High Power 4-hole flange, with venting holes, DC to 12.0 GHz, VSWR: 1.15 : 1 typ.
8H71-4141-00	TNCA female to TNC female, High Power 4-hole flange, without venting holes, DC to 12.0 GHz, VSWR: 1.15 : 1 typ.

Dimensions shown are Inches over Millimeters or vice versa. Standard units have stainless finish (last 2 digits of the P/N are -02). Interfaces are per DIN 47 223, DIN 47 226, IEC 169-4, IEC 169-7, IEC 169-8, IEC 457-2, IEC 60169-5, IEEE 287, MIL-PRF-39012, MIL DTL-24044, MIL DTL-3643,MIL-STD-348B, where applicable

Spectrum Elektrotechnik GmbH
Germany
www.spectrum-et.com
sales@spectrum-et.com
Phone: +49 / 89 / 35 48 04 0
Fax: +49 / 89 / 35 48 04 90

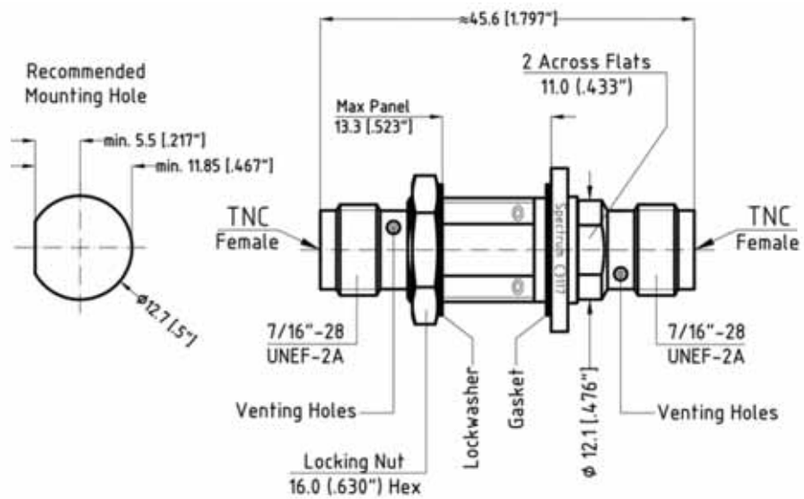

Hermeticity of 10^{-8} atm. cm³/s min.

8H3V-4141-00	TNC female to TNC female bulkhead feedthrough, with venting holes DC to 18.0 GHz, VSWR: 1.15 : 1 typ.
8H03-4141-00	TNC female to TNC female bulkhead feedthrough, without venting holes DC to 18.0 GHz, VSWR: 1.15 : 1 typ.
8H6V-4141-00	TNC female to TNC female, High Power bulkhead feedthrough, with venting holes DC to 12.0 GHz, VSWR: 1.15 : 1 typ.
8H60-4141-00	TNC female to TNC female, High Power bulkhead feedthrough, without venting holes DC to 12.0 GHz, VSWR: 1.15 : 1 typ.

Hermeticity of 10^{-5} atm. cm³/s min.

8H4V-4141-00	TNC female to TNC female bulkhead feedthrough, with venting holes DC to 18.0 GHz, VSWR: 1.15 : 1 typ.
8H13-4141-00	TNC female to TNC female bulkhead feedthrough, without venting holes DC to 18.0 GHz, VSWR: 1.15 : 1 typ.
8H8V-4141-00	TNC female to TNC female, High Power bulkhead feedthrough, with venting holes DC to 12.0 GHz, VSWR: 1.15 : 1 typ.
8H81-4141-00	TNC female to TNC female, High Power bulkhead feedthrough, without venting holes DC to 12.0 GHz, VSWR: 1.15 : 1 typ.

Dimensions shown are Inches over Millimeters or vice versa. Standard units have stainless finish (last 2 digits of the P/N are -02). Interfaces are per DIN 47 223, DIN 47 226, IEC 169-4, IEC 169-7, IEC 169-8, IEC 457-2, IEC 60169-5, IEEE 287, MIL-PRF-39012, MIL DTL-24044, MIL DTL-3643,MIL-STD-348B, where applicable

Spectrum Elektrotechnik GmbH
Germany
www.spectrum-et.com
sales@spectrum-et.com
Phone: +49 / 89 / 35 48 04 0
Fax: +49 / 89 / 35 48 04 90

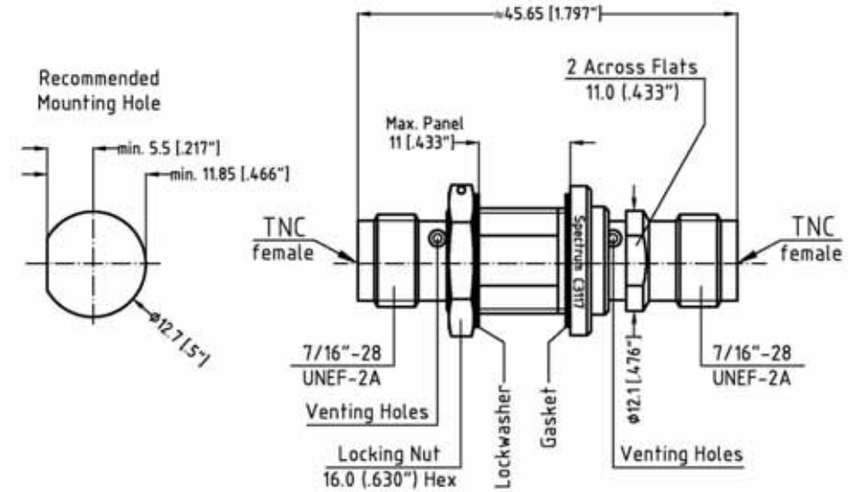

Hermeticity of 10^{-8} atm. cm³/s min.

8H1V-4141-00	TNC female to TNC female, High Power bulkhead feedthrough, with venting holes, DC to 18.0 GHz, VSWR: 1.15 : 1 typ.

Hermeticity of 10^{-5} atm. cm³/s min.

t. b. d.	TNC female to TNC female bulkhead feedthrough, with venting holes DC to 18.0 GHz, VSWR: 1.15 : 1 typ.

Spectrum Elektrotechnik GmbH offers a wide range of cable assemblies for use in thermovac applications. With your inquiry please advise specification needed:

- Length of the assembly and connector configuration
- Max. insertion loss vs. frequency
- Max. VSWR vs. frequency
- Power vs. frequency
- Environment, such as altitude and temperature

Dimensions shown are Inches over Millimeters or vice versa. Standard units have stainless finish (last 2 digits of the P/N are -02). Interfaces are per DIN 47 223, DIN 47 226, IEC 169-4, IEC 169-7, IEC 169-8, IEC 457-2, IEC 60169-5, IEEE 287, MIL-PRF-39012, MIL DTL-24044, MIL DTL-3643,MIL-STD-348B, where applicable

Spectrum Elektrotechnik GmbH
Germany
www.spectrum-et.com
sales@spectrum-et.com
Phone: +49 / 89 / 35 48 04 0
Fax: +49 / 89 / 35 48 04 90

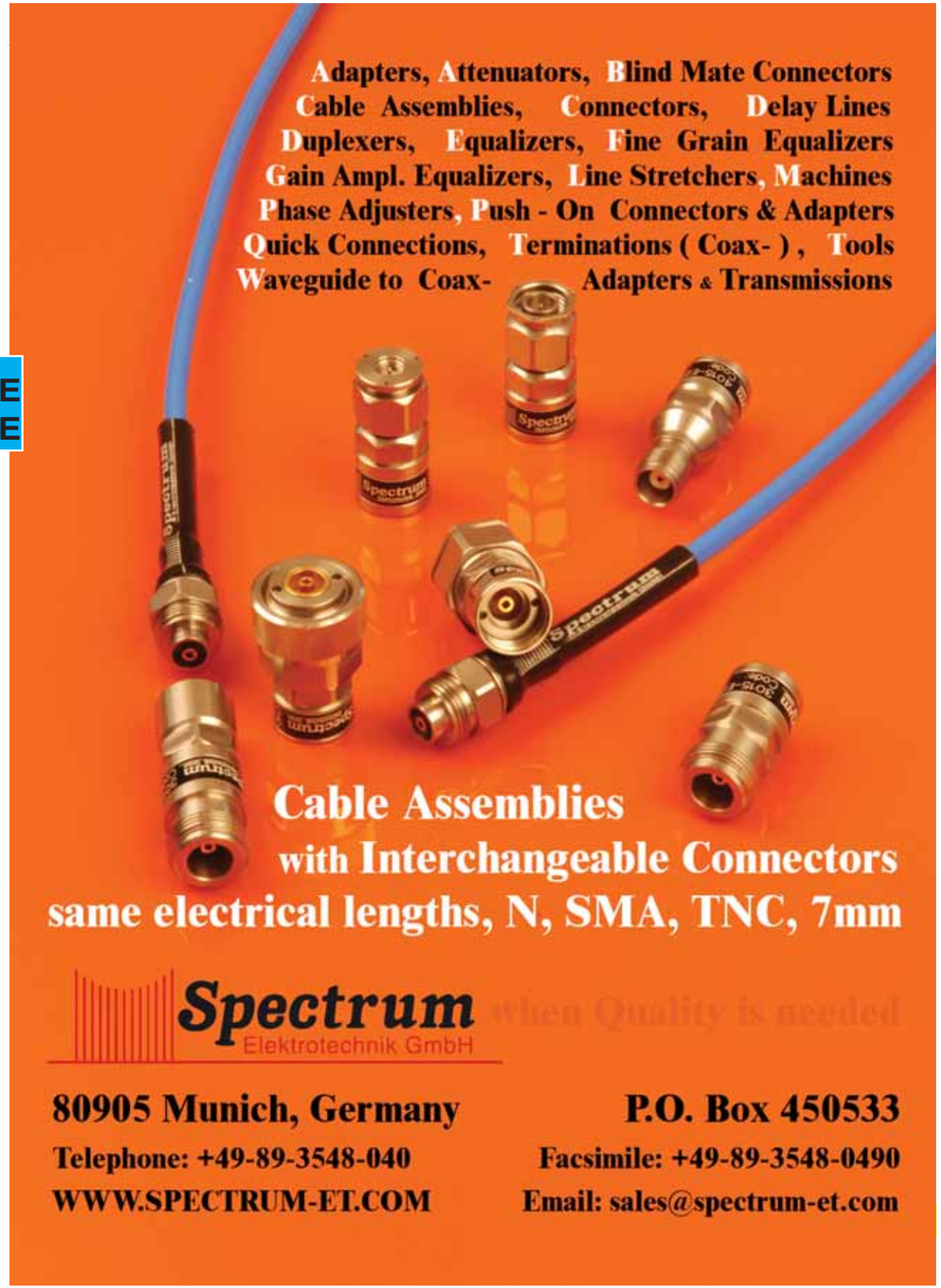

E
E

In-Series and Between-Series of Commercial-Adapters

If your choice of Adapter is not shown in this section, please refer to the Table below to determine other possible locations. Should you not find your adapter listed in any section, please consult the factory or your Spectrum Elektrotechnik Area Representative.

Commercial Adapters	Section	Page
Commercial Adapters Overview	FF	1
1.4/4.4 Specifications		2
Between Series 1.4/4.4 to N		4
1.8/5.6 Specifications		6
Between Series 1.8/5.6 to BNC		8
2/5.5 Specifications		10
Between Series 2/5.5 to 7mm		12
1 5/8 Specifications		14
Between Series 1 5/8 to 13/30 & 1 5/8 Coupler		16
3 1/8 Specifications		18
Between Series 3 1/8 to N & 3 1/8 Coupler		20
13/30 Specifications		22
13/30 In-Series		24

F
F

Although our catalog incorporates a very comprehensive range of products, due to our program of continuous development, there is no way that it will contain every product we manufacture. Please consult the factory for the product you require.
To improve our Standard Products we reserve the right to make changes. Specifications are therefore subject to change without notice.

Dimensions shown are Inches over Millimeters or vice versa. Standard units have stainless finish (last 2 digits of the P/N are -02). Interfaces are per DIN 47 223, DIN 47 226, IEC 169-4, IEC 169-7, IEC 169-8, IEC 457-2, IEC 60169-5, IEEE 287, MIL-PRF-39012, MIL DTL-24044, MIL DTL-3643,MIL-STD-348B, where applicable

The specifications below are general specifications for all 1.4/4.4 connectors. Specific Data for VSWR, Insertion Loss, R.F. leakage, etc., are available from the factory upon request. Specifications in the following table are recommended for any procurement documents or drawings. In the event of any conflict between these specifications and General Specifications DIN 47298, these specifications shall govern. These specifications are subject to change according to the latest revision.

REQUIREMENT	GENERAL SPECIFICATIONS
Standard Materials	STEEL corrosion resistant 1.4305 per DIN EN 10088; ASTM-A582 (303), or 1.4404 (316L) respectively. ALUMINUM AlMg4.5Mn per DIN DIN EN 1706, AlMgSi0.5 per DIN EN 1706, AlMgSi1 per DIN EN 1706 (6061-T6 per QQ-A-225/8). BRASS CuZn39Pb3 per DIN 17660 (QQ-B-626 (ASTM-B124), half hard). COPPER BERYLLIUM 33-25 CuBe2PbH per DIN17666(DIN CEN/TS;DIN SPEC 9700)(QQ-C530). TFE Fluorocarbon per DIN 52900 (ASTM-D-1710) SILICONE RUBBER per DIN ISO 3601)(A-A-59588,Class IIB) Gr. 50 - 75. BORIUM NITRITE Dielectric for high power applications per in-house specification
Finish for COPPER BERYLLIUM STAINLESS STEEL ALUMINUM BRASS VARIOUS	Center Contacts shall be gold plated to a minimum thickness of .00005-inch in accordance with ASTM-B-488, Type III, Code C, Class 1.25 shall be passivated per ASTM-A967 Conductive Parts shall have an iridited finish per MIL-DTL-5541 Other parts, such as Coupling Nuts and Back-Bodies shall be anodized per MIL-A-8625. .00003 inch (0.8 µm) min. gold plating per MIL-DTL-45204, or nickel plating per QQ-N-290, as specified. Imoloy .0001 inch (2.5 µm) min. plating, consisting of 55% Copper / 20% Zinc / 25% Tin (on special request).
Design	The design shall be such that the outline dimensions in this catalog are met. In addition, the assembled connector shall meet the interface dimensions.
ELECTRICAL	
Frequency Range	DC - 18.0 GHz min.
Insulation Resistance	The insulation resistance shall not be less than 10,000 megohms.
Voltage Standing Wave Ratio (VSWR)	1.06 + 0.005 x f (GHz)
Contact Resistance	The center contact resistance drop shall not exceed 8.0 milliohms and the outer contact resistance drop shall not exceed 0.5 milliohms.
Dielectric Withstanding Voltage	
RF High Potential	The magnitude of the test voltage shall be 1,000 volts rms at sea level.
Withstanding Voltage	RF High Potential Withstanding Voltage is not applicable.
RF Leakage	RF Leakage is not applicable.
Insertion Loss	Insertion Loss is not applicable.
MECHANICAL	
Connector Durability	The connector is to be tested and its mating connector shall be subjected to 100 insertions min.. Withdrawal cycles / minute are not applicable. The connector shall show no evidence of mechanical failure and the connector shall meet the mating characteristic requirements.
Cable Retention Force	56.2 pounds (250 N) min.
Coupling Nut Retention Force	Not applicable for Female connectors. For male connectors, the axial force is 56.2 lbs (250 N) max.. The torque is 4.43 inch-pounds (0.5 Nm) max.
Force to Engage and Disengage	The torque required to engage and disengage shall not exceed 4.43 inch-pounds (0.5 Nm).
Longitudinal Force max.	Longitudinal force is 1.79 lbs (8.0 N) max.
Mating Characteristics	See interface dimensions shown on next page. Applicable to Females only: oversize pin .0364 inch (.92 mm) max. dia. pin; .0787 inch (2.0 mm) deep; max. insertion force with min. dia. pin is not applicable; withdrawal force 2.82 oz (0.78 N) min. with .0354 inch (0.9 mm) max. dia. pin.
Recommended Mating Torque	13.3 inch-pounds (1.5 Nm)
ENVIRONMENTAL	
Corrosion (Salt Spray)	Specification DIN - 47275 Part 4.
Vibration	Specification DIN EN 60068.
Shock	Specification DIN EN 60068; VDE 0468.
Thermal Shock	Specification DIN - 47275 Part 4.
Moisture Resistance	Moisture Resistance not applicable.
Corona Level	Specification DIN - 47275 Part 3

Dimensions shown are Inches over Millimeters or vice versa. Standard units have stainless finish (last 2 digits of the P/N are -02). Interfaces are per DIN 47 223, DIN 47 226, IEC 169-4, IEC 169-7, IEC 169-8, IEC 457-2, IEC 60169-5, IEEE 287, MIL-PRF-39012, MIL DTL-24044, MIL DTL-3643,MIL-STD-348B, where applicable

Spectrum Elektrotechnik GmbH
Germany
www.spectrum-et.com
sales@spectrum-et.com
Phone: +49 / 89 / 35 48 04 0
Fax: +49 / 89 / 35 48 04 90

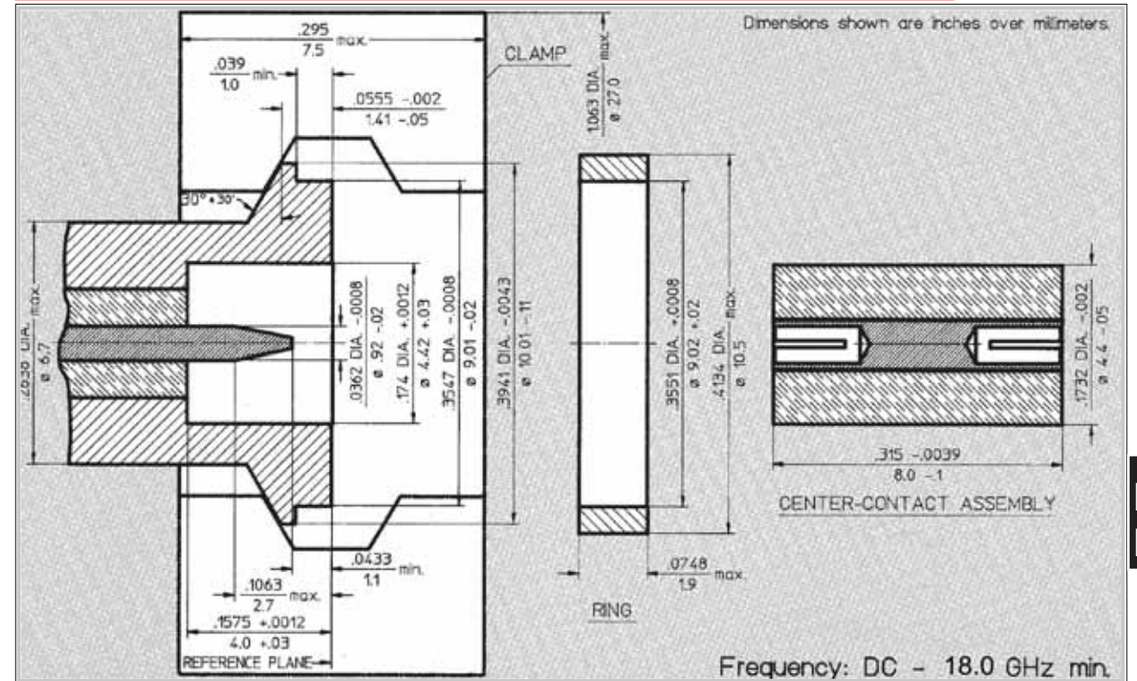

For mating you need:
- 2 connectors, as shown above
- 1 Ring, as shown above
- 1 Center Contact Assembly, as shown above
- 1 Appropriate Clamp to hold the units together, not shown

Dimensions shown are Inches over Millimeters or vice versa. Standard units have stainless finish (last 2 digits of the P/N are -02). Interfaces are per DIN 47 223, DIN 47 226, IEC 169-4, IEC 169-7, IEC 169-8, IEC 457-2, IEC 60169-5, IEEE 287, MIL-PRF-39012, MIL DTL-24044, MIL DTL-3643,MIL-STD-348B, where applicable

Spectrum Elektrotechnik GmbH
Germany
www.spectrum-et.com
sales@spectrum-et.com
Phone: +49 / 89 / 35 48 04 0
Fax: +49 / 89 / 35 48 04 90

Part - No.	8001-0361-02
Connectors	1.4/4.4 to N-fem.
Frequency	DC - 18.0 GHz
VSWR max.	1.06 + 0.005 x f(GHz)

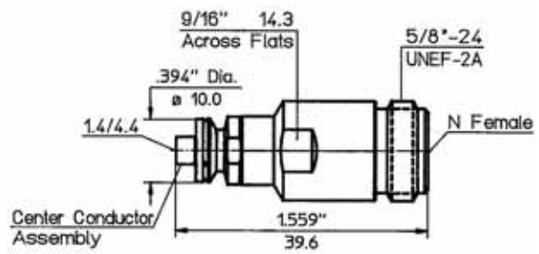

Part - No.	8U01-0361-02
Connectors	1.4/4.4 to N-fem.
Frequency	DC - 18.0 GHz
VSWR max.	1.06 + 0.005 x f(GHz)

Higher Temperature Application

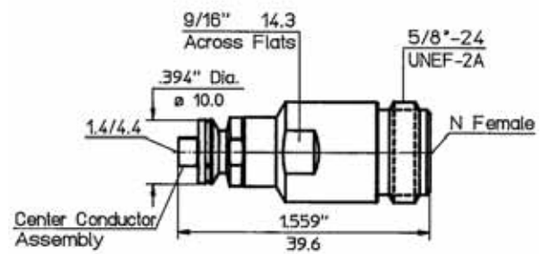

Part - No.	8002-0361-02
Connectors	1.4/4.4 to N-fem.
Frequency	DC - 18.0 GHz
VSWR max.	1.06 + 0.005 x f(GHz)

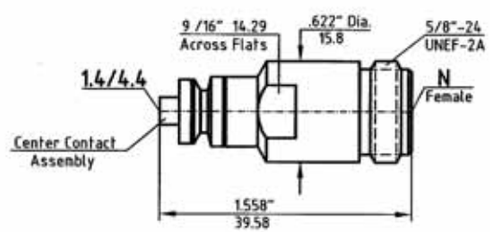

Part - No.	8U02-0361-02
Connectors	1.4/4.4 to N-fem.
Frequency	DC - 18.0 GHz
VSWR max.	1.06 + 0.005 x f(GHz)

Higher Temperature Application

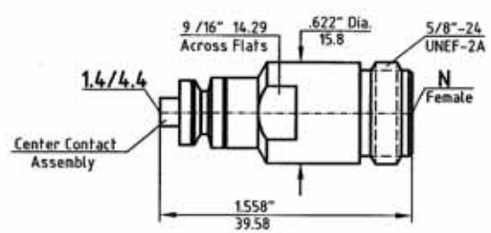

Dimensions shown are Inches over Millimeters or vice versa. Standard units have stainless finish (last 2 digits of the P/N are -02). Interfaces are per DIN 47 223, DIN 47 226, IEC 169-4, IEC 169-7, IEC 169-8, IEC 457-2, IEC 60169-5, IEEE 287, MIL-PRF-39012, MIL DTL-24044, MIL DTL-3643,MIL-STD-348B, where applicable

Spectrum Elektrotechnik GmbH
Germany
www.spectrum-et.com
sales@spectrum-et.com
Phone: +49 / 89 / 35 48 04 0
Fax: +49 / 89 / 35 48 04 90

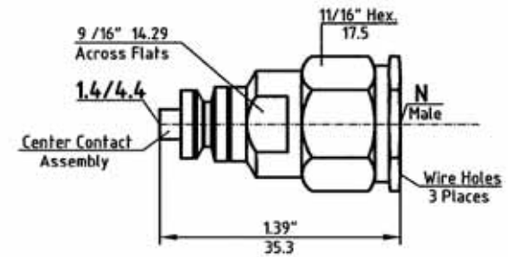

Part - No.	8001-0351-02
Connectors	1.4/4.4 to N-male
Frequency	DC - 18.0 GHz
VSWR max.	1.06 + 0.005 x f(GHz)

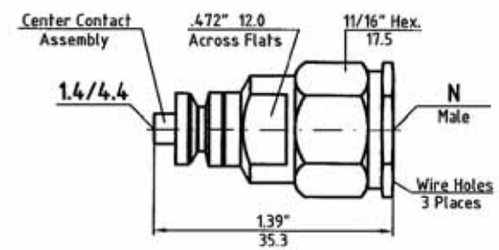

Part - No.	8002-0351-02
Connectors	1.4/4.4 to N-male
Frequency	DC - 18.0 GHz
VSWR max.	1.06 + 0.005 x f(GHz)

You need something different, or you need technical assistance? Please give us a call for immediate support from Marketing and/or from Engineering, or you may also call your nearest Spectrum Representative.

Dimensions shown are Inches over Millimeters or vice versa. Standard units have stainless finish (last 2 digits of the P/N are -02). Interfaces are per DIN 47 223, DIN 47 226, IEC 169-4, IEC 169-7, IEC 169-8, IEC 457-2, IEC 60169-5, IEEE 287, MIL-PRF-39012, MIL DTL-24044, MIL DTL-3643,MIL-STD-348B, where applicable

Spectrum Elektrotechnik GmbH
Germany
www.spectrum-et.com
sales@spectrum-et.com
Phone: +49 / 89 / 35 48 04 0
Fax: +49 / 89 / 35 48 04 90

The specifications below are general specifications for all 1.8/5.6 connectors. Specific Data for VSWR, Insertion Loss, R.F. leakage, etc., are available from the factory upon request. Specifications in the following table are recommended for any procurement documents or drawings. In the event of any conflict between these specifications and General Specifications DIN 47226, these specifications shall govern. These specifications are subject to change according to the latest revision.

REQUIREMENT	GENERAL SPECIFICATIONS
Standard Materials	STEEL corrosion resistant 1.4305 per DIN EN 10088; ASTM-A582 (303), or 1.4404 (316L) respectively. ALUMINUM AlMg4.5Mn per DIN DIN EN 1706, AlMgSi0.5 per DIN EN 1706, AlMgSi1 per DIN EN 1706 (6061-T6 per QQ-A-225/8). BRASS CuZn39Pb3 per DIN 17660 (QQ-B-626 (ASTM-B124), half hard). COPPER BERYLLIUM 33-25 CuBe2PbH per DIN17666(DIN CEN/TS;DIN SPEC 9700)(QQ-C530). TFE Fluorocarbon per DIN 52900 (ASTM-D-1710) SILICONE RUBBER per DIN ISO 3601)(A-A-59588,Class IIB) Gr. 50 - 75. BORIUM NITRITE Dielectric for high power applications per in-house specification
Finish for COPPER BERYLLIUM STAINLESS STEEL ALUMINUM BRASS VARIOUS	Center Contacts shall be gold plated to a minimum thickness of .00005-inch in accordance with ASTM-B-488, Type III, Code C, Class 1.25 shall be passivated per ASTM-A967 Conductive Parts shall have an iridited finish per MIL-DTL-5541 Other parts, such as Coupling Nuts and Back-Bodies shall be anodized per MIL-A-8625. .00003 inch (0.8 µm) min. gold plating per MIL-DTL-45204, or nickel plating per QQ-N-290, as specified. Imoloy .0001 inch (2.5 µm) min. plating, consisting of 55% Copper / 20% Zinc / 25% Tin (on special request).
Design	The design shall be such that the outline dimensions in this catalog are met. In addition, the assembled connector shall meet the interface dimensions.
ELECTRICAL	
Frequency Range	DC - 10.0 GHz min.
Insulation Resistance	The insulation resistance shall not be less than 10,000 megohms.
Voltage Standing Wave Ratio (VSWR)	1.06 + 0.005 x f (GHz)
Contact Resistance	The center contact resistance drop shall not exceed 4.0 milliohms and the outer contact resistance drop shall not exceed 2.0 milliohms.
Dielectric Withstanding Voltage	The magnitude of the test voltage shall be 1,000 volts rms at sea level.
RF High Potential Withstanding Voltage	RF high potential withstanding voltage is is not applicable. Leakage is not applicable.
RF Leakage	- (100 - f (GHz)) dB
Insertion Loss	Insertion Loss is not applicable.
MECHANICAL	
Connector Durability	The connector is to be tested and its mating connector shall be subjected to 500 insertions min. Withdrawal cycles / minute are not applicable. The connector shall show no evidence of mechanical failure and the connector shall meet the mating characteristic requirements.
Cable Retention Force	Cable Retention Force is not applicable.
Coupling Nut Retention Force	Coupling Nut Retention Force is not applicable.
Force to Engage and Disengage	Force to Engage and Disengage is not applicable.
Longitudinal Force max.	Longitudinal force is not applicable.
Mating Characteristics	See interface dimensions shown on next page. Applicable to Females only: oversize pin dia., insertion depth, insertion force with min. dia. pin are not applicable; withdrawal force 1.79 oz (.498 N) min. with .382 inch (9.7 mm) max. dia. pin.
Recommended Mating Torque	Recommended Mating Torque is not applicable.
ENVIRONMENTAL	
Corrosion (Salt Spray)	Specification MIL-STD-202, Method 101, Test Condition B. The salt solution shall be 5%.
Vibration	Specification MIL-STD-202, Method 204, Test Condition B.
Shock	Specification MIL-STD-202, Method 213, Test Condition I.
Thermal Shock	Specification MIL-STD-202, Method 107, Test Condition B, except high temperature shall be + 200°C.
Moisture Resistance	Specification MIL-STD-202, Method 106. Step 7b (vibration) shall be omitted. Insulation resistance shall be 200 megohms min. within 5 minutes of removal from humidity.
Corona Level	The connector shall not exhibit breakdown (corona) when the applied voltage is 200 volts rms and the altitude is 65,600 feet (20 Km.).

Dimensions shown are Inches over Millimeters or vice versa. Standard units have stainless finish (last 2 digits of the P/N are -02). Interfaces are per DIN 47 223, DIN 47 226, IEC 169-4, IEC 169-7, IEC 169-8, IEC 457-2, IEC 60169-5, IEEE 287, MIL-PRF-39012, MIL DTL-24044, MIL DTL-3643,MIL-STD-348B, where applicable

Spectrum Elektrotechnik GmbH
Germany
www.spectrum-et.com
sales@spectrum-et.com
Phone: +49 / 89 / 35 48 04 0
Fax: +49 / 89 / 35 48 04 90

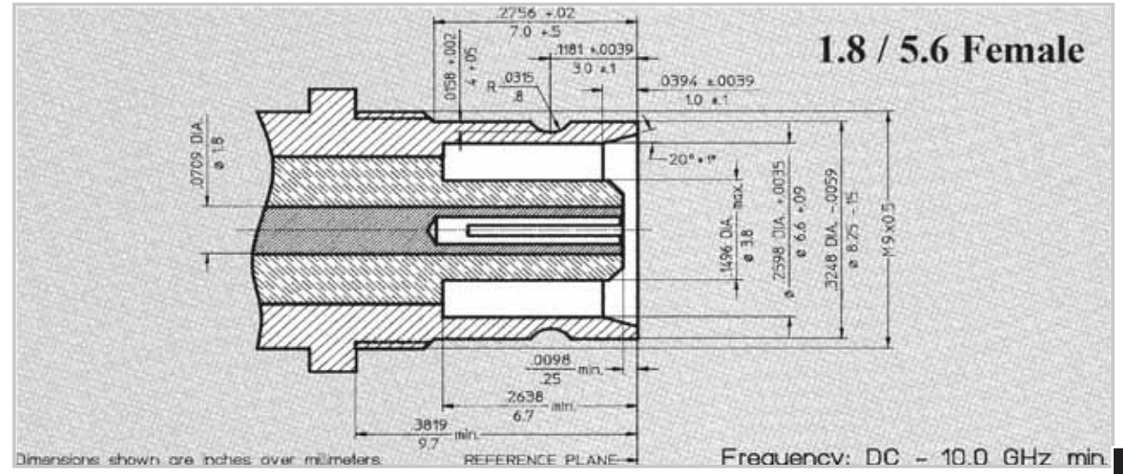

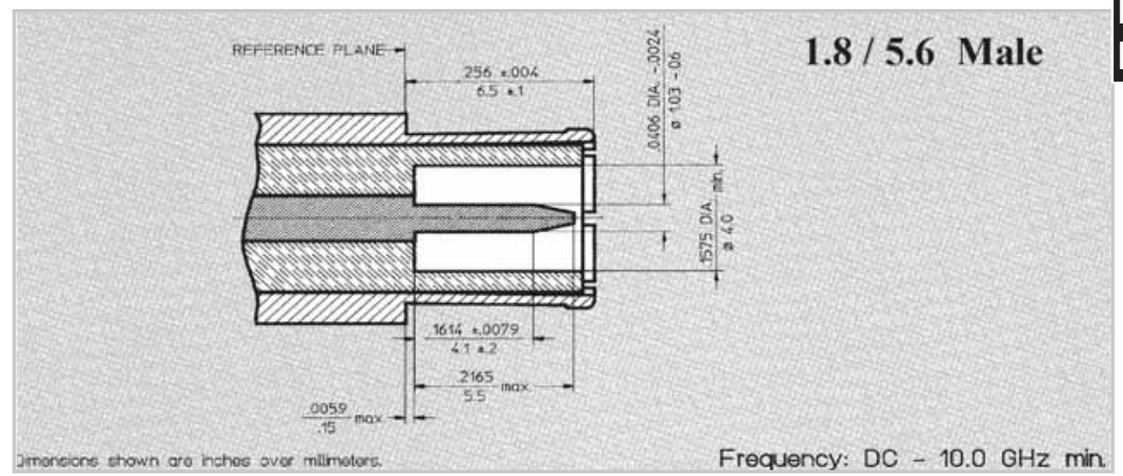

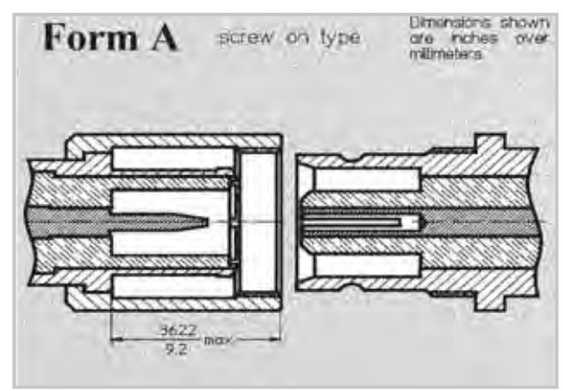

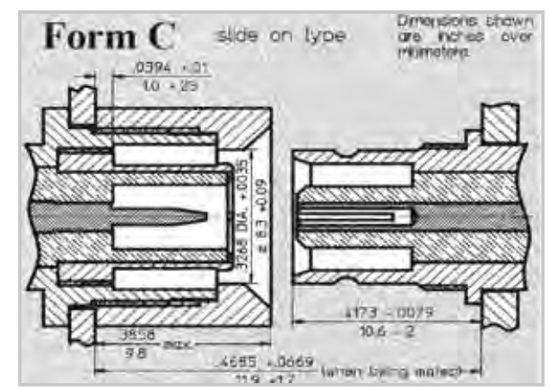

Dimensions shown are Inches over Millimeters or vice versa. Standard units have stainless finish (last 2 digits of the P/N are -02). Interfaces are per DIN 47 223, DIN 47 226, IEC 169-4, IEC 169-7, IEC 169-8, IEC 457-2, IEC 60169-5, IEEE 287, MIL-PRF-39012, MIL DTL-24044, MIL DTL-3643,MIL-STD-348B, where applicable

Spectrum Elektrotechnik GmbH
Germany
www.spectrum-et.com
sales@spectrum-et.com
Phone: +49 / 89 / 35 48 04 0
Fax: +49 / 89 / 35 48 04 90

Spectrum Elektrotechnik GmbH

Part - No.	8001-0481-05
Connectors	1.8 / 5.6-fem. to BNC-fem.
Frequency	DC - 10.0 GHz
VSWR max.	1.06 + 0.005 x f(GHz)

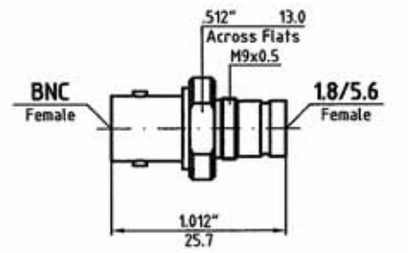

Part - No.	8001-0471-05
Connectors	1.8 / 5.6-fem. to BNC-male
Frequency	DC - 10.0 GHz
VSWR max.	1.06 + 0.005 x f(GHz)

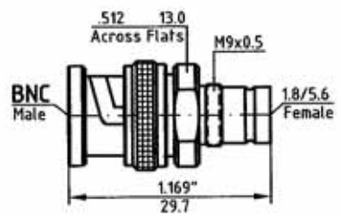

Part - No.	8001-0781-05
Connectors	1.8 / 5.6-male to BNC-fem.
Frequency	DC - 10.0 GHz
VSWR max.	1.06 + 0.005 x f(GHz)

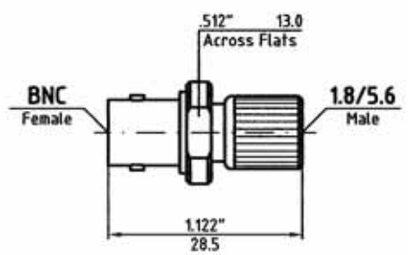

Part - No.	8001-0771-05
Connectors	1.8 / 5.6-male to BNC-male
Frequency	DC - 10.0 GHz
VSWR max.	1.06 + 0.005 x f(GHz)

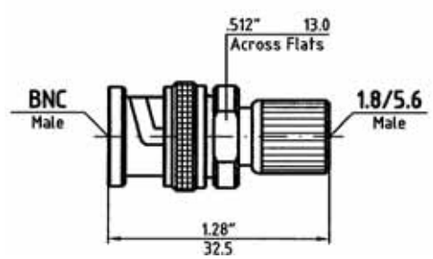

Dimensions shown are Inches over Millimeters or vice versa. Standard units have stainless finish (last 2 digits of the P/N are -02). Interfaces are per DIN 47 223, DIN 47 226, IEC 169-4, IEC 169-7, IEC 169-8, IEC 457-2, IEC 60169-5, IEC 287, MIL-PRF-39012, MIL DTL-24044, MIL DTL-3643,MIL-STD-348B, where applicable

Spectrum Elektrotechnik GmbH
Germany
www.spectrum-et.com
sales@spectrum-et.com
Phone: +49 / 89 / 35 48 04 0
Fax: +49 / 89 / 35 48 04 90

Specification 2/5.5 to 7mm

The specifications below are general specifications for all 2/5.5 connectors. Specific Data for VSWR, Insertion loss, R.F. leakage etc., are available from the factory upon request. Specifications in the following table are recommended for any procurement documents or drawings. In the event of any conflict between these specifications and other documentation, these specifications shall govern. These specifications are subject to change according to the latest revision.

REQUIREMENT	GENERAL SPECIFICATIONS
Standard Materials	STEEL corrosion resistant 1.4305 per DIN EN 10088; ASTM-A582 (303), or 1.4404 (316L) respectively. ALUMINUM AlMg4.5Mn per DIN DIN EN 1706, AlMgSi0.5 per DIN EN 1706, AlMgSi1 per DIN EN 1706 (6061-T6 per QQ-A-225/8). BRASS CuZn39Pb3 per DIN 17660 (QQ-B-626 (ASTM-B124), half hard). COPPER BERYLLIUM 33-25 CuBe2PbH per DIN17666(DIN CEN/TS;DIN SPEC 9700)(QQ-C530). TFE Fluorocarbon per DIN 52900 (ASTM-D-1710) SILICONE RUBBER per DIN ISO 3601)(A-A-59588,Class IIB) Gr. 50 - 75. BORIUM NITRITE Dielectric for high power applications per in-house specification
Finish for COPPER BERYLLIUM STAINLESS STEEL ALUMINUM BRASS VARIOUS	Center Contacts shall be gold plated to a minimum thickness of .00005-inch in accordance with ASTM-B-488, Type III, Code C, Class 1.25 shall be passivated per ASTM-A967 Conductive Parts shall have an iridited finish per MIL-DTL-5541 Other parts, such as Coupling Nuts and Back-Bodies shall be anodized per MIL-A-8625. .00003 inch (0.8 µm) min. gold plating per MIL-DTL-45204, or nickel plating per QQ-N-290, as specified. Imoloy .0001 inch (2.5 µm) min. plating, consisting of 55% Copper / 20% Zinc / 25% Tin (on special request).
Design	The design shall be such that the outline dimensions in this catalog are met. In addition, the assembled connector shall meet the interface dimensions.
ELECTRICAL	
Frequency Range	DC - 14.0 GHz min.
Insulation Resistance	The insulation resistance shall not be less than 5,000 megohms.
Voltage Standing Wave Ratio (VSWR)	1.06 + .005 * f (GHz)
Contact Resistance	The center contact resistance drop shall not exceed 1.5 milliohms and the outer contact resistance drop shall not exceed 2.0 milliohms.
Dielectric Withstanding Voltage	
RF High Potential Withstanding Voltage	The magnitude of the test voltage shall be 1,500 volts rms at sea level. The RF high potential withstanding voltage is 1,000 volts rms at 5 MHz. Leakage is not applicable.
RF Leakage	- (90 - f (GHz)) dB
Insertion Loss	(.05 SQT(f(GHz))) dB
MECHANICAL	
Connector Durability	The connector is to be tested and its mating connector shall be subjected to 500 insertions and withdrawal cycles at 12 cycles per minute max. The connector shall show no evidence of mechanical failure and the connector shall meet the mating characteristic requirements.
Cable Retention Force	Cable Retention Force is not applicable.
Coupling Nut Retention Force	Coupling Nut Retention Force is not applicable.
Force to Engage and Disengage	Force to engage and disengage is not applicable.
Longitudinal Force max.	Longitudinal force is not applicable.
Mating Characteristics	Mating Characteristics are not applicable
Recommended Mating Torque	Recommended Mating Torque is not applicable.
ENVIRONMENTAL	
Corrosion (Salt Spray)	Specification MIL-STD-202, Method 101, Test Condition B. The salt solution shall be 5%.
Vibration	Specification MIL-STD-202, Method 204, Test Condition B.
Shock	Specification MIL-STD-202, Method 213, Test Condition I.
Thermal Shock	Specification MIL-STD-202, Method 107, Test Condition B, except high temperature shall be + 200°C.
Moisture Resistance	Specification MIL-STD-202, Method 106. Step 7b (vibration) shall be omitted. Insulation resistance shall be 200 megohms min. within 5 minutes of removal from humidity.
Corona Level	Not applicable.

Dimensions shown are Inches over Millimeters or vice versa. Standard units have stainless finish (last 2 digits of the P/N are -02). Interfaces are per DIN 47 223, DIN 47 226, IEC 169-4, IEC 169-7, IEC 169-8, IEC 457-2, IEC 60169-5, IEEE 287, MIL-PRF-39012, MIL DTL-24044, MIL DTL-3643,MIL-STD-348B, where applicable

Spectrum Elektrotechnik GmbH
Germany
www.spectrum-et.com
sales@spectrum-et.com
Phone: +49 / 89 / 35 48 04 0
Fax: +49 / 89 / 35 48 04 90

Interface Mating Dimensions 2/5.5

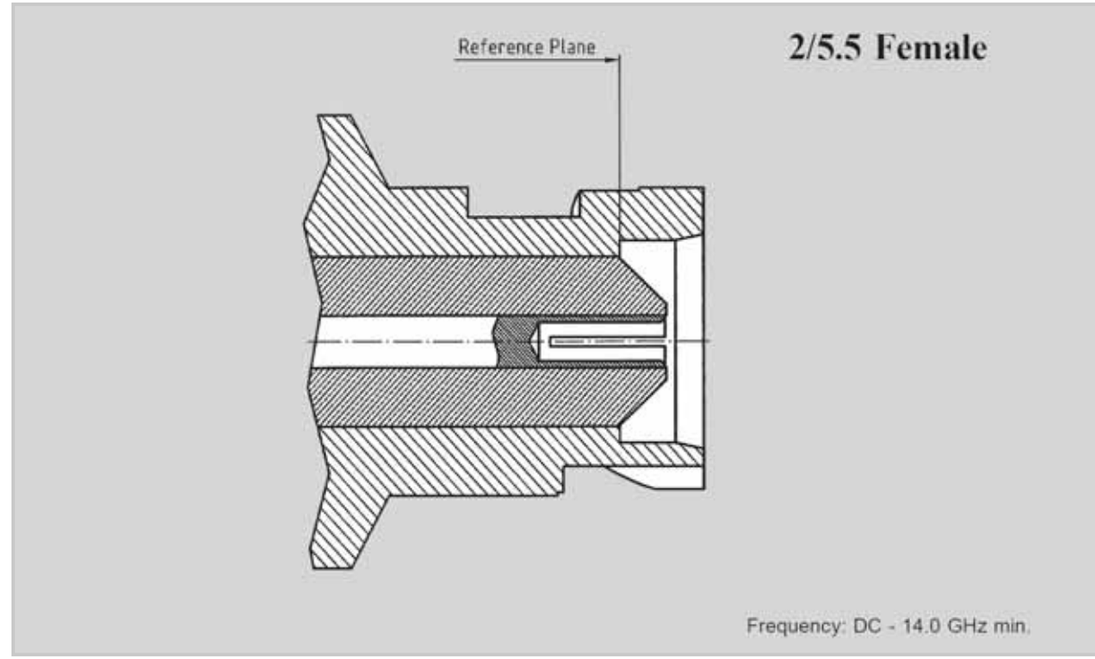

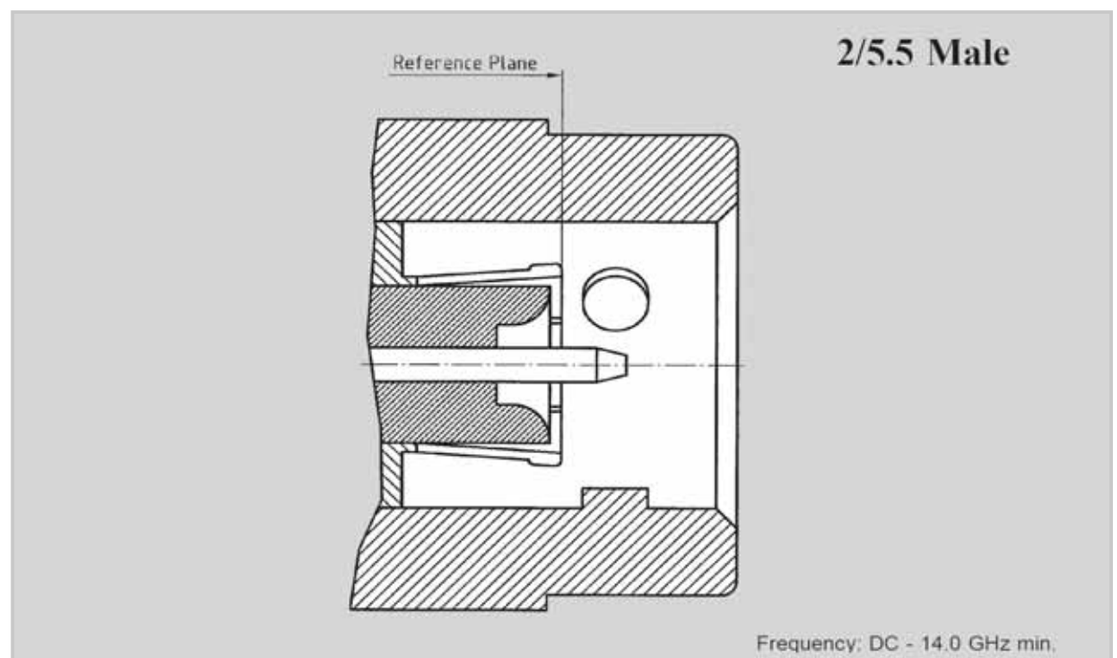

Dimensions shown are Inches over Millimeters or vice versa. Standard units have stainless finish (last 2 digits of the P/N are -02). Interfaces are per DIN 47 223, DIN 47 226, IEC 169-4, IEC 169-7, IEC 169-8, IEC 457-2, IEC 60169-5, IEEE 287, MIL-PRF-39012, MIL DTL-24044, MIL DTL-3643,MIL-STD-348B, where applicable

Spectrum Elektrotechnik GmbH
Germany
www.spectrum-et.com
sales@spectrum-et.com
Phone: +49 / 89 / 35 48 04 0
Fax: +49 / 89 / 35 48 04 90

Part - No.	8001-F290-02
Connectors	2/5.5-f to 7 mm
Frequency	DC - 14.0 GHz
VSWR max.	1.06 + 0.005 x f(GHz)

The Center Conductor of the 7 mm Connector is supplied with 4 slots. If you require 6 slots, Part Number changes to: **8001 - F296 - 02**

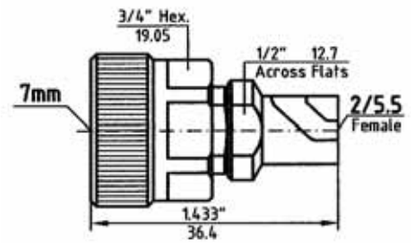

Part - No.	8001-F296-02
Connectors	2/5.5-f to 7 mm
Frequency	DC - 14.0 GHz
VSWR max.	1.06 + 0.005 x f(GHz)

The Center Conductor of the 7 mm Connector is supplied with 6 slots.

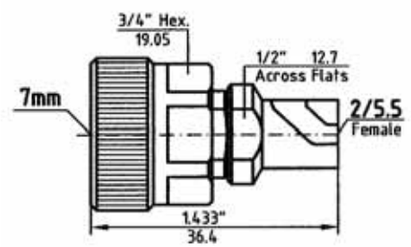

You need something different, or you need technical assistance? Please give us a call for immediate support from Marketing and/or from Engineering, or you may also call your nearest Spectrum Representative.

Dimensions shown are Inches over Millimeters or vice versa. Standard units have stainless finish (last 2 digits of the P/N are -02). Interfaces are per DIN 47 223, DIN 47 226, IEC 169-4, IEC 169-7, IEC 169-8, IEC 457-2, IEC 60169-5, IEEE 287, MIL-PRF-39012, MIL DTL-24044, MIL DTL-3643,MIL-STD-348B, where applicable

Spectrum Elektrotechnik GmbH
Germany
www.spectrum-et.com
sales@spectrum-et.com
Phone: +49 / 89 / 35 48 04 0
Fax: +49 / 89 / 35 48 04 90

The specifications below are general specifications for all 1 5/8 connectors. Specific Data for VSWR, Insertion loss, R.F. leakage etc., are available from the factory upon request. Specifications in the following table are recommended for any procurement documents or drawings. In the event of any conflict between these specifications and other documentation, these specifications shall govern. These specifications are subject to change according to the latest revision.

REQUIREMENT	GENERAL SPECIFICATIONS
Standard Materials	STEEL corrosion resistant 1.4305 per DIN EN 10088; ASTM-A582 (303), or 1.4404 (316L) respectively. ALUMINUM AlMg4.5Mn per DIN DIN EN 1706, AlMgSi0.5 per DIN EN 1706, AlMgSi1 per DIN EN 1706 (6061-T6 per QQ-A-225/8). BRASS CuZn39Pb3 per DIN 17660 (QQ-B-626 (ASTM-B124), half hard). COPPER BERYLLIUM 33-25 CuBe2PbH per DIN17666(DIN CEN/TS;DIN SPEC 9700)(QQ-C530). TFE Fluorocarbon per DIN 52900 (ASTM-D-1710)
Finish for COPPER BERYLLIUM STAINLESS STEEL ALUMINUM BRASS	Center Contacts shall be gold plated to a minimum thickness of .00005-inch in accordance with ASTM-B-488, Type III, Code C, Class 1.25 shall be passivated per ASTM-A967 Conductive Parts shall be silver plated to a min. thickness of 2.5µm [.000031"] with a copper and nickel under-strike Parts shall be silver plated to a min. thickness of 2.5µm [.000031"] with a copper and nickel under-strike
Design	The design shall be such that the outline dimensions in this catalog are met. In addition, the assembled connector shall meet the interface dimensions.
ELECTRICAL	
Frequency Range Impedance Voltage Standing Wave Ratio (VSWR)	DC - 2.0 GHz min. 50 Ohms 1.06 : 1 =< 2 GHz
MECHANICAL	
Cable Retention Force Coupling Nut Retention Force Force to Engage and Disengage Longitudinal Force max. Mating Characteristics Recommended Mating Torque	Cable Retention Force is not applicable. Coupling Nut Retention Force is not applicable. Force to engage and disengage is not applicable. Longitudinal force is not applicable. Mating Characteristics are not applicable Recommended Mating Torque is not applicable.

Dimensions shown are Inches over Millimeters or vice versa. Standard units have stainless finish (last 2 digits of the P/N are -02). Interfaces are per DIN 47 223, DIN 47 226, IEC 169-4, IEC 169-7, IEC 169-8, IEC 457-2, IEC 60169-5, IEEE 287, MIL-PRF-39012, MIL DTL-24044, MIL DTL-3643,MIL-STD-348B, where applicable

1 5/8 EIA Interface

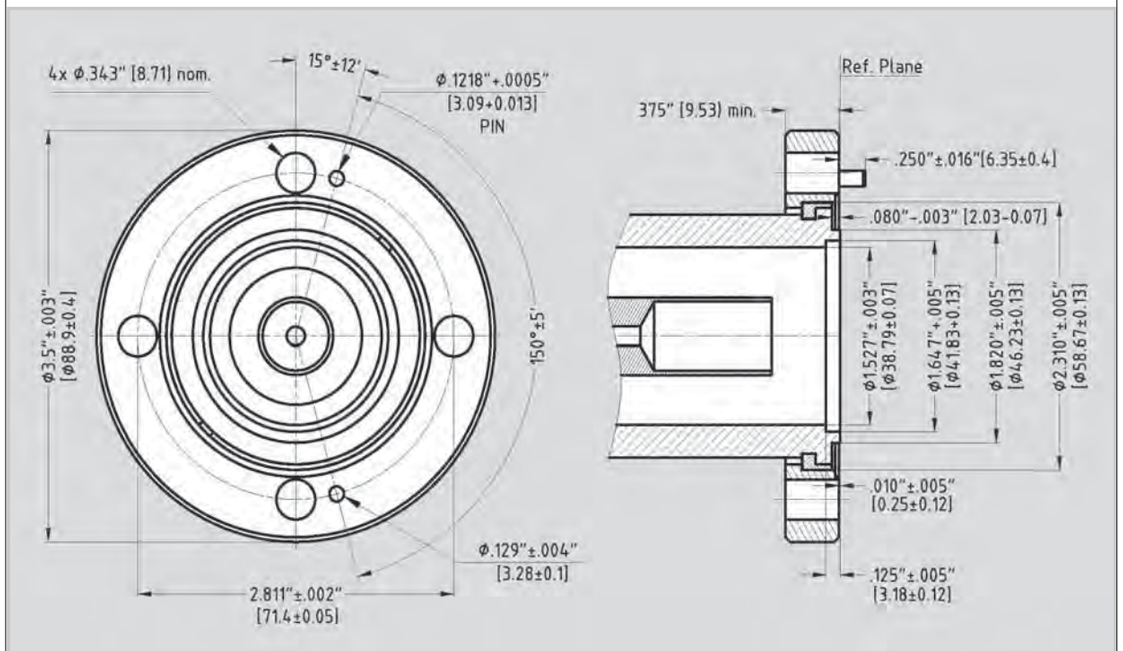

Dimensions shown are Inches over Millimeters or vice versa. Standard units have stainless finish (last 2 digits of the P/N are -02). Interfaces are per DIN 47 223, DIN 47 226, IEC 169-4, IEC 169-7, IEC 169-8, IEC 457-2, IEC 60169-5, IEEE 287, MIL-PRF-39012, MIL DTL-24044, MIL DTL-3643,MIL-STD-348B, where applicable

Part - No.	KU-EA58-13
Connectors	1 5/8 EIA to 1 5/8 EIA
Frequency	DC - 0.86 GHz
VSWR max.	N/A

Coupler between 2 units

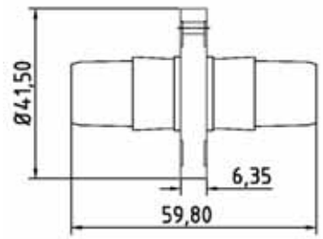

Part - No.	8001-Z15E-13
Connectors	1 5/8 EIA to 13/30-fem
Frequency	DC - 0.86 GHz
VSWR max.	1.05 : 1

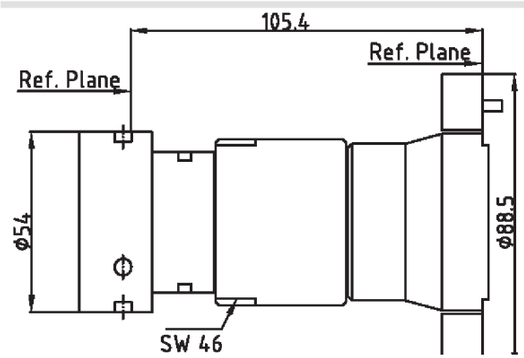

You need something different, or you need technical assistance? Please give us a call for immediate support from Marketing and/or from Engineering, or you may also call your nearest Spectrum Representative.

Dimensions shown are Inches over Millimeters or vice versa. Standard units have stainless finish (last 2 digits of the P/N are -02). Interfaces are per DIN 47 223, DIN 47 226, IEC 169-4, IEC 169-7, IEC 169-8, IEC 457-2, IEC 60169-5, IEC 287, MIL-PRF-39012, MIL DTL-24044, MIL DTL-3643,MIL-STD-348B, where applicable

Spectrum Elektrotechnik GmbH
Germany
www.spectrum-et.com
sales@spectrum-et.com
Phone: +49 / 89 / 35 48 04 0
Fax: +49 / 89 / 35 48 04 90

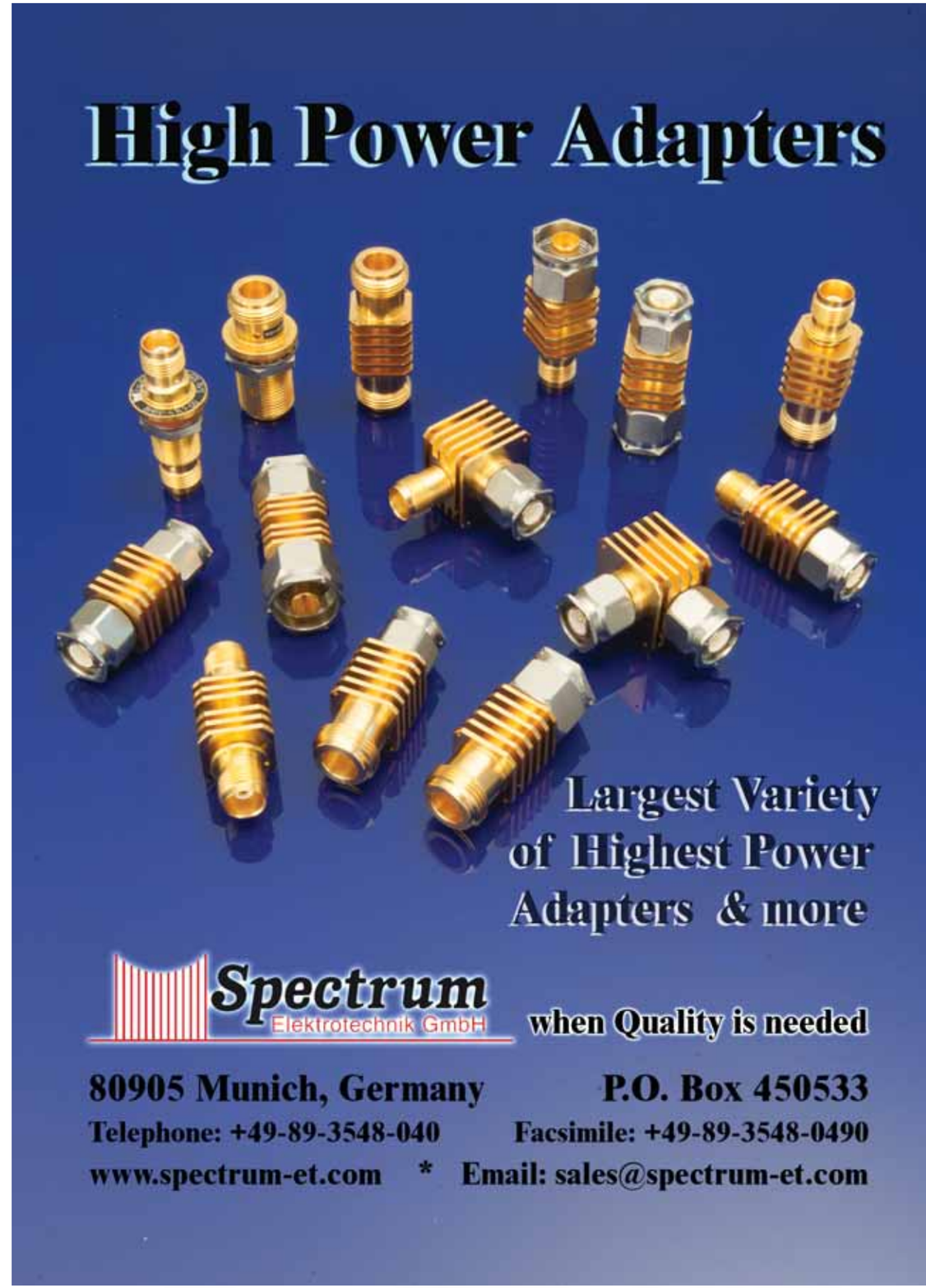

The specifications below are general specifications for all 3 1/8 connectors. Specific Data for VSWR, Insertion loss, R.F. leakage etc., are available from the factory upon request. Specifications in the following table are recommended for any procurement documents or drawings. In the event of any conflict between these specifications and other documentation, these specifications shall govern. These specifications are subject to change according to the latest revision.

REQUIREMENT	GENERAL SPECIFICATIONS
Standard Materials	STEEL corrosion resistant 1.4305 per DIN EN 10088; ASTM-A582 (303), or 1.4404 (316L) respectively. ALUMINUM AlMg4.5Mn per DIN DIN EN 1706, AlMgSi0.5 per DIN EN 1706, AlMgSi1 per DIN EN 1706 (6061-T6 per QQ-A-225/8). BRASS CuZn39Pb3 per DIN 17660 (QQ-B-626 (ASTM-B124), half hard). COPPER BERYLLIUM 33-25 CuBe2PbH per DIN17666(DIN CEN/TS;DIN SPEC 9700)(QQ-C530). TFE Fluorocarbon per DIN 52900 (ASTM-D-1710)
Finish for COPPER BERYLLIUM STAINLESS STEEL ALUMINUM BRASS	Center Contacts shall be gold plated to a minimum thickness of .00005-inch in accordance with ASTM-B-488, Type III, Code C, Class 1.25 shall be passivated per ASTM-A967 Conductive Parts shall be silver plated to a min. thickness of 2.5µm [.000031"] with a copper and nickel under-strike Parts shall be silver plated to a min. thickness of 2.5µm [.000031"] with a copper and nickel under-strike
Design	The design shall be such that the outline dimensions in this catalog are met. In addition, the assembled connector shall meet the interface dimensions.
ELECTRICAL	
Frequency Range Impedance Voltage Standing Wave Ratio (VSWR)	DC - 1.2 GHz min. 50 Ohms 1.06 : 1 =< 1.2 GHz
MECHANICAL	
Cable Retention Force Coupling Nut Retention Force Force to Engage and Disengage Longitudinal Force max. Mating Characteristics Recommended Mating Torque	Cable Retention Force is not applicable. Coupling Nut Retention Force is not applicable. Force to engage and disengage is not applicable. Longitudinal force is not applicable. Mating Characteristics are not applicable Recommended Mating Torque is not applicable.

Dimensions shown are Inches over Millimeters or vice versa. Standard units have stainless finish (last 2 digits of the P/N are -02). Interfaces are per DIN 47 223, DIN 47 226, IEC 169-4, IEC 169-7, IEC 169-8, IEC 457-2, IEC 60169-5, IEEE 287, MIL-PRF-39012, MIL DTL-24044, MIL DTL-3643,MIL-STD-348B, where applicable

Spectrum Elektrotechnik GmbH
Germany
www.spectrum-et.com
sales@spectrum-et.com
Phone: +49 / 89 / 35 48 04 0
Fax: +49 / 89 / 35 48 04 90

3 1/8 EIA Interface

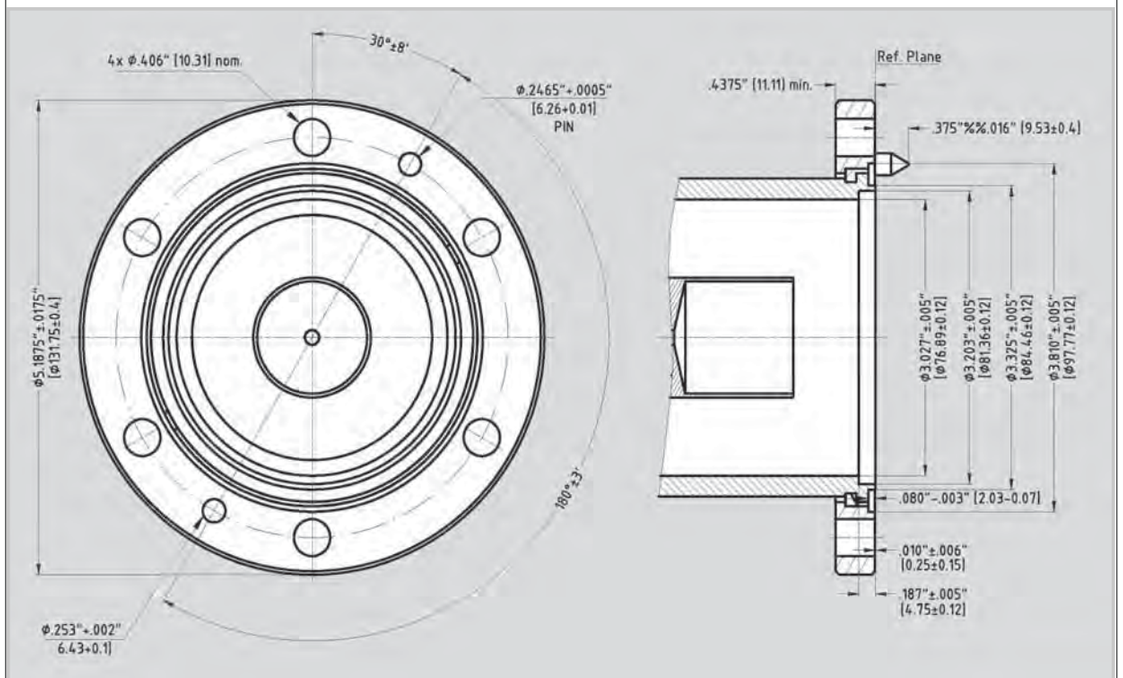

Dimensions shown are Inches over Millimeters or vice versa. Standard units have stainless finish (last 2 digits of the P/N are -02). Interfaces are per DIN 47 223, DIN 47 226, IEC 169-4, IEC 169-7, IEC 169-8, IEC 457-2, IEC 60169-5, IEEE 287, MIL-PRF-39012, MIL DTL-24044, MIL DTL-3643,MIL-STD-348B, where applicable

Spectrum Elektrotechnik GmbH
Germany
www.spectrum-et.com
sales@spectrum-et.com
Phone: +49 / 89 / 35 48 04 0
Fax: +49 / 89 / 35 48 04 90

Part - No.	KU-EA31-13
Connectors	3 1/8 EIA to 3 1/8 EIA
Frequency	DC - 0.86 GHz
VSWR max.	N/A

Coupler between 2 units

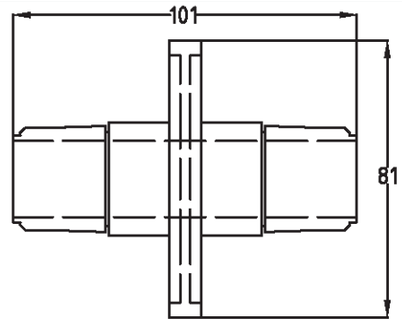

Part - No.	8001-3E61-13
Connectors	3 1/8 EIA to N fem
Frequency	DC - 0.86 GHz
VSWR max.	1.05:1

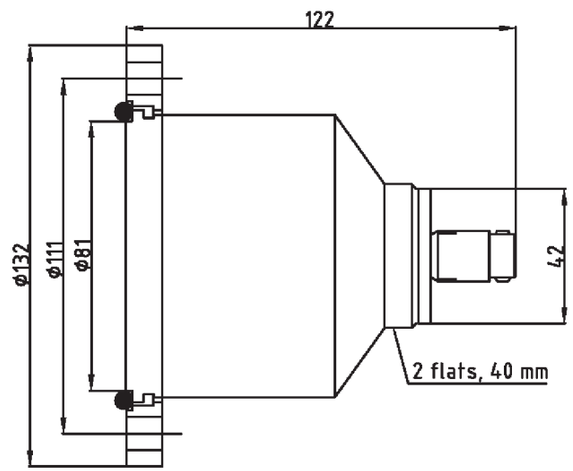

Although our catalog incorporates a very comprehensive range of products, due to our program of continuous development, there is no way that it will contain every product we manufacture. Please consult the factory for the product you require.

Telephone: +49-89-3548-040 Facsimile: +49-89-3548-0490
E-mail: sales@spectrum-et.com www.spectrum-et.com

Dimensions shown are Inches over Millimeters or vice versa. Standard units have stainless finish (last 2 digits of the P/N are -02). Interfaces are per DIN 47 223, DIN 47 226, IEC 169-4, IEC 169-7, IEC 169-8, IEC 457-2, IEC 60169-5, IEEE 287, MIL-PRF-39012, MIL DTL-24044, MIL DTL-3643,MIL-STD-348B, where applicable

Spectrum Elektrotechnik GmbH
Germany
www.spectrum-et.com
sales@spectrum-et.com
Phone: +49 / 89 / 35 48 04 0
Fax: +49 / 89 / 35 48 04 90

The specifications below are general specifications for all 13/30 connectors. Specific Data for VSWR, Insertion loss, R.F. leakage etc., are available from the factory upon request. Specifications in the following table are recommended for any procurement documents or drawings. In the event of any conflict between these specifications and other documentation, these specifications shall govern. These specifications are subject to change according to the latest revision.

REQUIREMENT	GENERAL SPECIFICATIONS
Standard Materials	STEEL corrosion resistant 1.4305 per DIN EN 10088; ASTM-A582 (303), or 1.4404 (316L) respectively. ALUMINUM AlMg4.5Mn per DIN DIN EN 1706, AlMgSi0.5 per DIN EN 1706, AlMgSi1 per DIN EN 1706 (6061-T6 per QQ-A-225/8). BRASS CuZn39Pb3 per DIN 17660 (QQ-B-626 (ASTM-B124), half hard). COPPER BERYLLIUM 33-25 CuBe2PbH per DIN17666(DIN CEN/TS;DIN SPEC 9700)(QQ-C530). TFE Fluorocarbon per DIN 52900 (ASTM-D-1710)
Finish for COPPER BERYLLIUM STAINLESS STEEL ALUMINUM BRASS	Center Contacts shall be gold plated to a minimum thickness of .00005-inch in accordance with ASTM-B-488, Type III, Code C, Class 1.25 shall be passivated per ASTM-A967 Conductive Parts shall be silver plated to a min. thickness of 2.5µm [.000031"] with a copper and nickel under-strike Parts shall be silver plated to a min. thickness of 2.5µm [.000031"] with a copper and nickel under-strike
Design	The design shall be such that the outline dimensions in this catalog are met. In addition, the assembled connector shall meet the interface dimensions.
ELECTRICAL	
Frequency Range Impedance Voltage Standing Wave Ratio (VSWR)	DC - 2.0 GHz min. 50 Ohms 1.1 : 1 =< 1.2 GHz
MECHANICAL	
Cable Retention Force Coupling Nut Retention Force Force to Engage and Disengage Longitudinal Force max. Mating Characteristics Recommended Mating Torque	Cable Retention Force is not applicable. Coupling Nut Retention Force is not applicable. Force to engage and disengage is not applicable. Longitudinal force is not applicable. Mating Characteristics are not applicable Recommended Mating Torque is not applicable.

Dimensions shown are Inches over Millimeters or vice versa. Standard units have stainless finish (last 2 digits of the P/N are -02). Interfaces are per DIN 47 223, DIN 47 226, IEC 169-4, IEC 169-7, IEC 169-8, IEC 457-2, IEC 60169-5, IEEE 287, MIL-PRF-39012, MIL DTL-24044, MIL DTL-3643,MIL-STD-348B, where applicable

Spectrum Elektrotechnik GmbH
Germany
www.spectrum-et.com
sales@spectrum-et.com
Phone: +49 / 89 / 35 48 04 0
Fax: +49 / 89 / 35 48 04 90

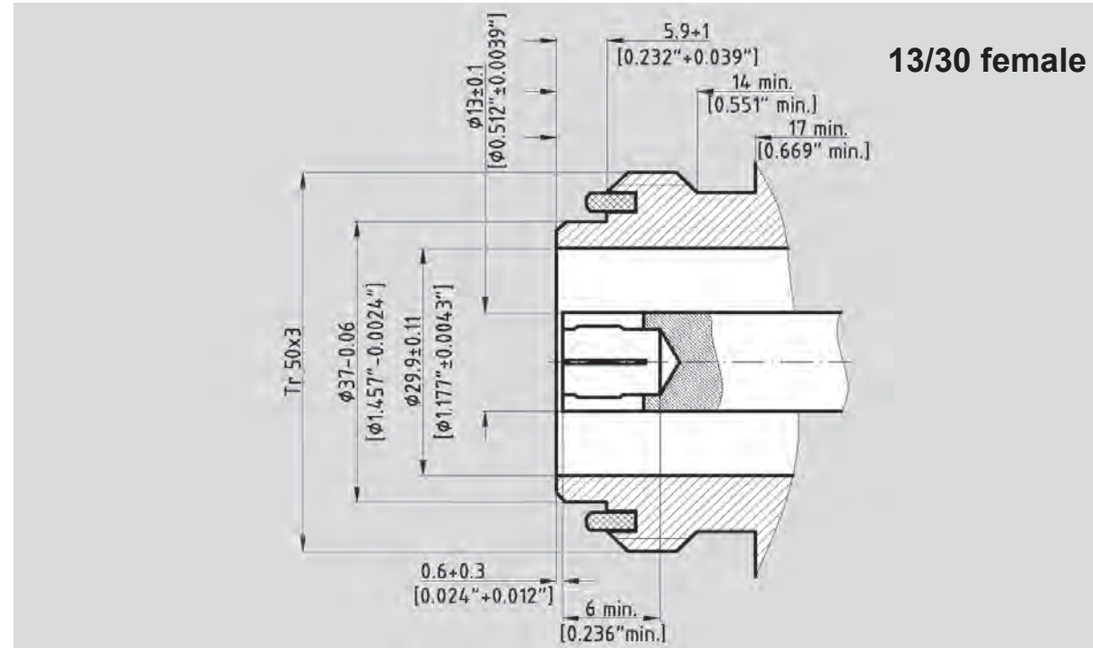

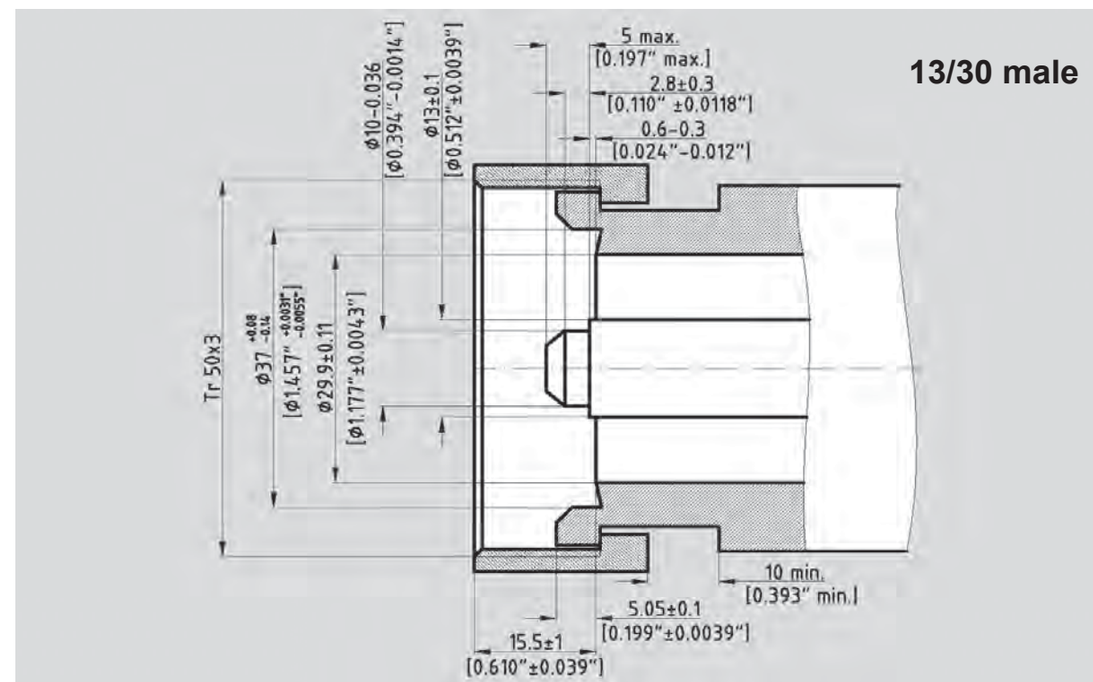

Dimensions shown are Inches over Millimeters or vice versa. Standard units have stainless finish (last 2 digits of the P/N are -02). Interfaces are per DIN 47 223, DIN 47 226, IEC 169-4, IEC 169-7, IEC 169-8, IEC 457-2, IEC 60169-5, IEEE 287, MIL-PRF-39012, MIL DTL-24044, MIL DTL-3643,MIL-STD-348B, where applicable

Spectrum Elektrotechnik GmbH
Germany
www.spectrum-et.com
sales@spectrum-et.com
Phone: +49 / 89 / 35 48 04 0
Fax: +49 / 89 / 35 48 04 90

Part - No.	8001-Z1Z1-13
Connectors	13/30-fem. to 13/30-fem.
Frequency	DC bis 860 MHz
VSWR max.	1.03 : 1

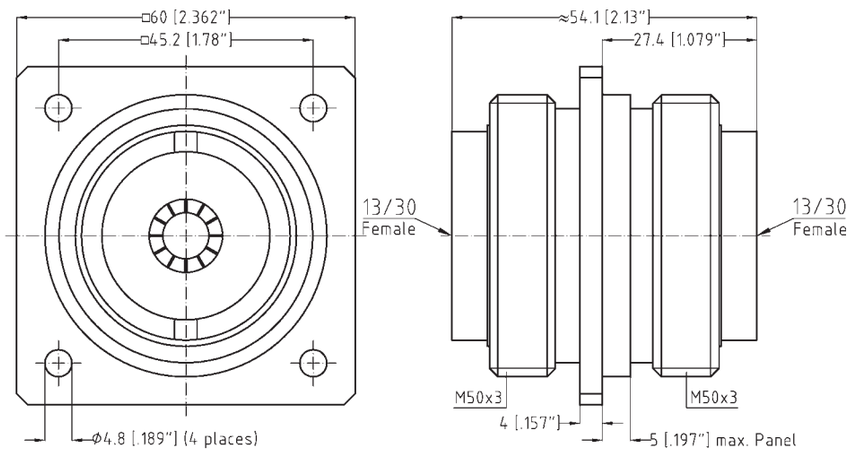

Dimensions shown are Inches over Millimeters or vice versa. Standard units have stainless finish (last 2 digits of the P/N are -02). Interfaces are per DIN 47 223, DIN 47 226, IEC 169-4, IEC 169-7, IEC 169-8, IEC 457-2, IEC 60169-5, IEEE 287, MIL-PRF-39012, MIL DTL-24044, MIL DTL-3643,MIL-STD-348B, where applicable

In-Series and Between-Series of 75 OHM

If your choice of Adapter is not shown in this section, please refer to the Table below to determine other possible locations. Should you not find your adapter listed in any section, please consult the factory or your Spectrum Elektrotechnik Area Representative.

75 Ohms Adapters	Section	Page
75 Ohms Adapters Overview	GG	1
N 75 Ohms Push-On to N female 75 Ohms	GG	2
Between Series N female 75 Ohms to TNC female 75 Ohms	GG	3
Between Series 1.6/5.6 to BNC male 75 Ohms	GG	3

Although our catalog incorporates a very comprehensive range of products, due to our program of continuous development, there is no way that it will contain every product we manufacture. Please consult the factory for the product you require.
To improve our Standard Products we reserve the right to make changes. Specifications are therefore subject to change without notice.

Dimensions shown are Inches over Millimeters or vice versa. Standard units have stainless finish (last 2 digits of the P/N are -02). Interfaces are per DIN 47 223, DIN 47 226, IEC 169-4, IEC 169-7, IEC 169-8, IEC 457-2, IEC 60169-5, IEEE 287, MIL-PRF-39012, MIL DTL-24044, MIL DTL-3643,MIL-STD-348B, where applicable

75 Ohms Adapters

Part - No.	8001-7P8N-02
Connectors	**N-Push to N-fem.**
Frequency	DC - 3.0 GHz
VSWR max.	1.06 + 0.005 x f(GHz)

75 Ohms both ends

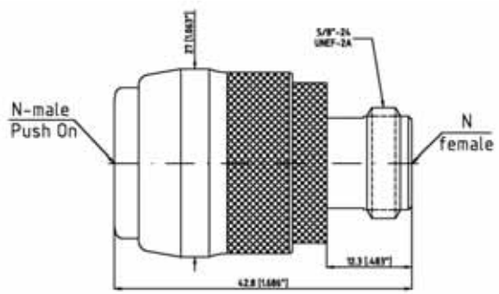

Part - No.	8U01-7P8N-02
Connectors	**N-Push to N-fem.**
Frequency	DC - 3.0 GHz
VSWR max.	1.06 + 0.005 x f(GHz)

75 Ohms both ends

Higher temperature application

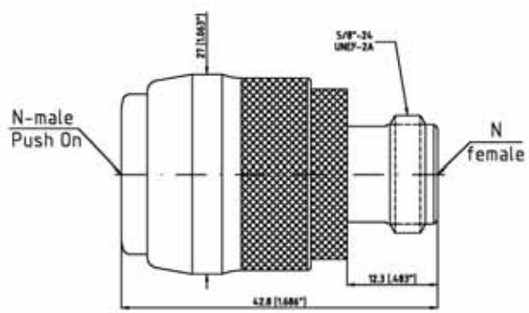

You do not find the Adapter you need for an application? You need technical support? You need price and delivery information? Please contact your nearest Spectrum Representative, or please contact us direct.

Telephone: +49-89-3548-040 Facsimile: +49-89-3548-0490

e-mail: sales@spectrum-et.com www.spectrum-et.com

Dimensions shown are Inches over Millimeters or vice versa. Standard units have stainless finish (last 2 digits of the P/N are -02). Interfaces are per DIN 47 223, DIN 47 226, IEC 169-4, IEC 169-7, IEC 169-8, IEC 457-2, IEC 60169-5, IEEE 287, MIL-PRF-39012, MIL DTL-24044, MIL DTL-3643,MIL-STD-348B, where applicable

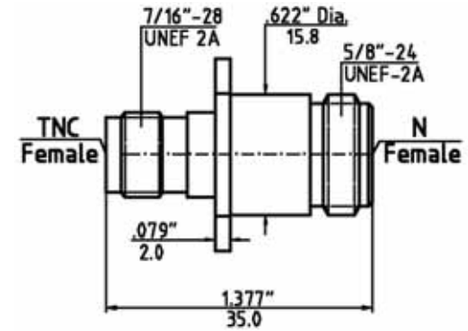

Part - No.	8001-7P7S-02
Connectors	**N-fem. to TNC-fem.**
Frequency	DC - 3.0 GHz
VSWR max.	1.06 + 0.005 x f(GHz)

Between-Series 1.6/5.6 to BNC

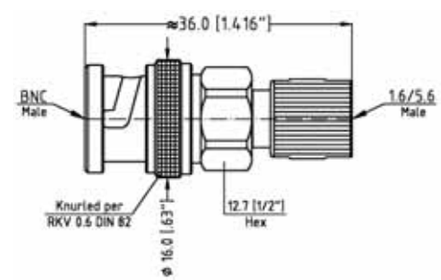

Part - No.	8001-A17B-05
Connectors	**1.6/5.6-male to BNC-male**
Frequency	DC - 1.0 GHz
VSWR max.	1.06 + 0.005 x f(GHz).

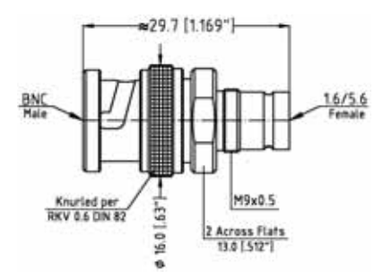

Part - No.	8001-A27B-05
Connectors	**1.6/5.6-fem. to BNC-male**
Frequency	DC - 1.0 GHz
VSWR max.	1.06 + 0.005 x f(GHz)

Dimensions shown are Inches over Millimeters or vice versa. Standard units have stainless finish (last 2 digits of the P/N are -02). Interfaces are per DIN 47 223, DIN 47 226, IEC 169-4, IEC 169-7, IEC 169-8, IEC 457-2, IEC 60169-5, IEEE 287, MIL-PRF-39012, MIL DTL-24044, MIL DTL-3643,MIL-STD-348B, where applicable

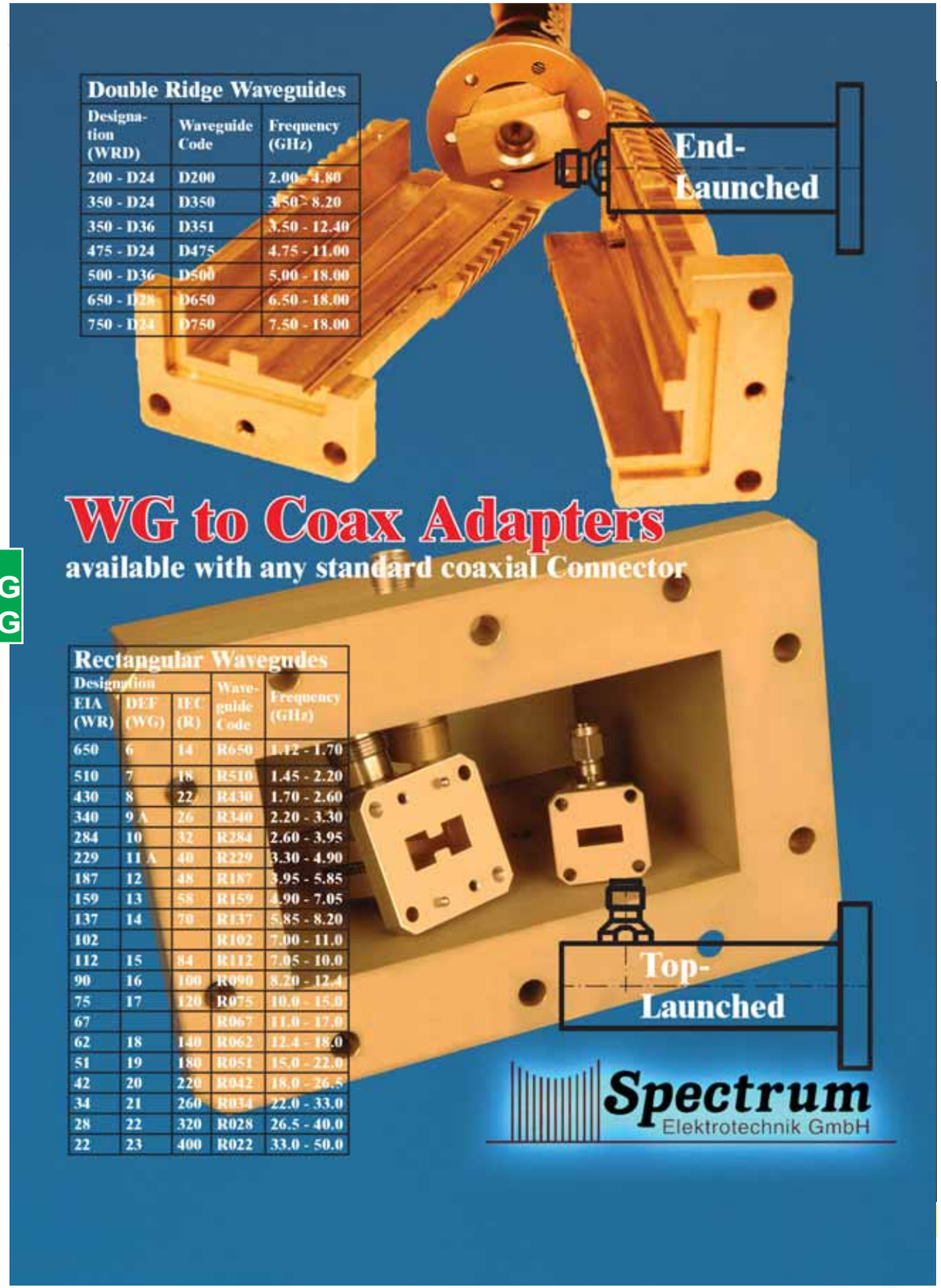

Waveguide to Coax Adapters

If your choice of Waveguide to Coax Adapter is not shown in this section, please refer to the Table below to determine other possible locations. Should you not find your adapter listed in any section, please consult the factory or your Spectrum Elektrotechnik Area Representative.

Waveguide to Coax Adapters	Section	Page
Overview	HH	1
Ordering Information		2
Rectangular End Launched		3
Rectangular Top Launched		4
Double Ridge End Launched		6
Double Ridge Top Launched		7
Waveguide Flanges Rectangular Waveguides		8
Waveguide Flanges Double Ridge Waveguides		12

Although our catalog incorporates a very comprehensive range of products, due to our program of continuous development, there is no way that it will contain every product we manufacture. Please consult the factory for the product you require.
To improve our Standard Products we reserve the right to make changes. Specifications are therefore subject to change without notice.

Dimensions shown are Inches over Millimeters or vice versa. Standard units have stainless finish (last 2 digits of the P/N are -02). Interfaces are per DIN 47 223, DIN 47 226, IEC 169-4, IEC 169-7, IEC 169-8, IEC 457-2, IEC 60169-5, IEEE 287, MIL-PRF-39012, MIL DTL-24044, MIL DTL-3643,MIL-STD-348B, where applicable

The Precision Waveguide to Coax Adapters are impedance matching a 50 Ohm coaxial transmission line to Rectangular or Double Ridge Waveguides. Spectrum's Precision Adapters offer excellent VSWR and low insertion loss over their respective full operating frequency bands. The adapters feature Top-Launched or End-Launched probes, they can be optimized for performance over customers specific frequency bands. A comprehensive range of precision stainless steel connectors are fitted as standard. For connector specifications, materials ,surface treatment, environmental, etc., please refer to the appropriate section in this Handbook.

Ordering information for Waveguide to Coax Adapters.

For details please refer to the following pages.

WA	-	BCDE	-	GH	JK
These first two digits stand for: Waveguide Adapter		**WAVEGUIDE CODE:** Please use Waveguide code as per table below.		**CONNECTOR CODE:** Please use Connector code as per table below.	**CONFIGURATION:** 01: Top Launched and Standard Flange H1: End- Launched and Standard Flange A special number will be assigned for units made to customer specification.

Designation EIA (WR)	DEF (WG)	IEC (R)	Waveguide Code	Frequency (GHz)	Waveguide Dimensions (inches)	Standard Flanges
650	6	14	**R650**	1.12 - 1.70	6.500 x 3.250	UG418A/U
510	7	18	**R510**	1.45 - 2.20	5.100 x 2.550	UG1717/U
430	8	22	**R430**	1.70 - 2.60	4.300 x 2.150	UG1711/U
340	9A	26	**R340**	2.20 - 3.30	3.400 x 1.700	UG1713/U
284	10	32	**R284**	2.60 - 3.95	2.840 x 1.340	UG1725/U
229	11A	40	**R229**	3.30 - 4.90	2.290 x 1.145	UG1727/U
187	12	48	**R187**	3.95 - 5.85	1.872 x 0.872	UG1729/U
159	13	58	**R159**	4.90 - 7.05	1.590 x 0.795	UG1731/U
137	14	70	**R137**	5.85 - 8.20	1.372 x 0.622	UG1733/U
112	15	84	**R112**	7.05 - 10.0	1.122 x 0.497	UG138/U
90	16	100	**R090**	8.20 - 12.4	0.900 x 0.400	UG135/U
75	17	120	**R075**	10.0 - 15.0	0.750 x 0.375	UBR120A
62	18	140	**R062**	12.4 - 18.0	0.622 x 0.311	UG1665/U
51	19	180	**R051**	15.0 - 22.0	0.510 x 0.255	UBR180A
42	42	220	**R042**	18.0 - 26.5	0.420 x 0.170	UG597/U
34	21	260	**R034**	22.0 - 33.0	0.340 x 0.170	UBR260A
28	22	320	**R028**	26.5 - 40.0	0.280 x 0.140	UBR320A

Designation (WRD)	Waveguide Code	Frequency (GHz)	Waveguide Dimensions (inches)	Standard Flanges (All clear)
200 - D24	**D200**	2.00 - 4.80	Please refer to pages HH8ff	WRD 200 - D24 Cover
350 - D24	**D350**	3.50 - 8.20		WRD 350 - D24 Cover
350 - D36	**D351**	3.50 - 12.40		WRD 350 - D36 Cover
475 - D24	**D475**	4.75 - 11.00		WRD 475 - D24 Cover
500 - D36	**D500**	5.00 - 18.00		WRD 500 - D36 Cover
650 - D28	**D650**	6.50 - 18.00		WRD 650 - D28 Cover
750 - D24	**D750**	7.50 - 18.00		WRD 750 - D24 Cover

Connector Type		Sex	Connector Code
2.4 mm		female	HF
		male	HM
3.5 mm		female	92
		male	91
7 mm	4 slots conductor	-	90
	6 slots conductor	-	96
7/16		female	76
		male	75
HN		female	68
		male	69
2.92 mm		female	KF
		male	KM
N		female	61
		male	51
SC		female	79
		male	80
SMA		female	21
		male	11
TNC		female	41
		male	31

Not all the connectors listed have been designed for any of the waveguides. This also will not be desired by the customers, as the frequency ranges of the waveguides and the connectors should match. But if you require a special match please contact the factory.

Dimensions shown are Inches over Millimeters or vice versa. Standard units have stainless finish (last 2 digits of the P/N are -02). Interfaces are per DIN 47 223, DIN 47 226, IEC 169-4, IEC 169-7, IEC 169-8, IEC 457-2, IEC 60169-5, IEEE 287, MIL-PRF-39012, MIL DTL-24044, MIL DTL-3643,MIL-STD-348B, where applicable

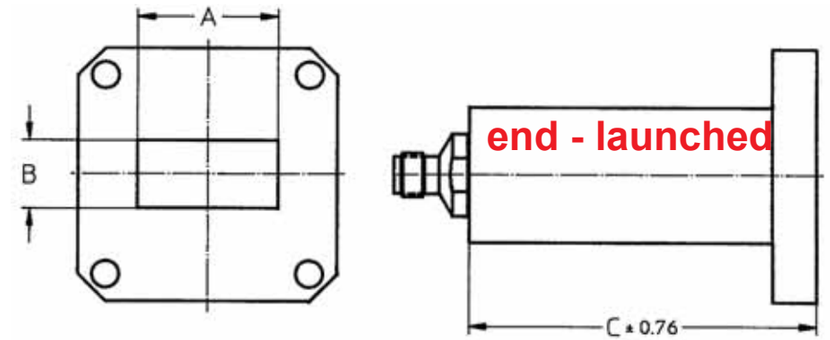

Designation EIA (WR)	DEF (WG)	IEC (R)	Frequency (GHz)	VSWR max.	Recommended Power Rating[1] cw (W)	peak (KW)	Dimensions (mm) A	B	C	Standard Flange[3]	Standard Material	Comment	Part Number[2]
650	6	14	1.12 - 1.70				165.10	82.55		UG418A/U	Aluminum		
510	7	18	1.45 - 2.20				129.54	64.77		UG1717/U	Aluminum		
430	8	22	1.70 - 2.60				109.22	54.61		UG1711/U	Aluminum		
340	9A	26	2.20 - 3.30				86.36	43.18		UG1713/U	Aluminum		
284	10	32	2.60 - 3.95	1.50	1000	20	72.136	34.036	203.2	UG1725/U	Aluminum	high power	**WA-R284-XXH1**
284	10	32	2.60 - 3.95	1.50	1000	20	72.136	34.036	203.2	UG1724/U	Brass	high power	
229	11A	40	3.30 - 4.90	1.50	1000	20	58.166	29.083	177.8	UG1727/U	Aluminum	high power	**WA-R229-XXH1**
229	11A	40	3.30 - 4.90	1.50	1000	20	58.166	29.083	177.8	UG1726/U	Brass	high power	
187	12	48	3.95 - 5.85	1.50	1000	20	47.549	22.149	152.4	UG1729/U	Aluminum	high power	**WA-R187-XXH1**
187	12	48	3.95 - 5.85	1.50	1000	20	47.549	22.149	152.4	UG1728/U	Brass	high power	
159	13	58	4.90 - 7.05	1.50	750	16	40.386	20.193	127.0	UG1731/U	Aluminum	high power	**WA-R159-XXH1**
159	13	58	4.90 - 7.05	1.50	750	16	40.386	20.193	127.0	UG1730/U	Brass	high power	
137	14	70	5.85 - 8.20	1.50	500	14	34.849	15.799	114.3	UG1733/U	Aluminum	high power	**WA-R137-XXH1**
137	14	70	5.85 - 8.20	1.50	500	14	34.849	15.799	114.3	UG1732/U	Brass	high power	
112	15	84	7.05 - 10.0	1.50	500	12	28.499	12.624	101.6	UG138/U	Aluminum	high power	**WA-R112-XXH1**
112	15	84	7.05 - 10.0	1.50	500	12	28.499	12.624	101.6	UG51/U	Brass	high power	
102			7.00 - 11.0	1.50	500	12	25.908	12.624	88.9		Aluminum	high power	**WA-R102-XXH1**
102			7.00 - 11.0	1.50	500	12	25.908	12.624	88.9	UG1493/U	Brass	high power	
90	16	100	8.20 - 12.4	1.50	450	10	22.860	10.160	76.2	UG135/U	Aluminum	high power	**WA-R090-XXH1**
90	16	100	8.20 - 12.4	1.50	450	10	22.860	10.160	76.2	UG39/U	Brass	high power	
75	17	120	10.0 - 15.0	1.50	400	8	19.050	9.525	63.5	UBR120	Aluminum	high power	**WA-R075-XXH1**
75	17	120	10.0 - 15.0	1.50	400	8	19.050	9.525	63.5	UBR120	Brass	high power	
67			11.0 - 17.00	1.50	350	8	16.967	8.636	61.0		Aluminum	high power	**WA-R067-XXH1**
67			11.0 - 17.00	1.50	350	8	16.967	8.636	61.0		Brass	high power	
62	18	140	12.4 - 18.0		350	8	15.799	7.899	58.4	UG1665/U	Aluminum	high power	**WA-R062-XXH1**
62	18	140	12.4 - 18.0	1.50	350	8	15.799	7.899	58.4	UG419/U	Brass	high power	
51	19	180	15.0 - 22.0				12.954	6.477		UBR180			
42	20	220	18.0 - 26.5	1.50	50	4	10.668	4.318	50.8	UG597/U	Aluminum	high power	**WA-R042-XXH1**
42	20	220	18.0 - 26.5	1.50	50	4	10.668	4.318	50.8	UG595/U	Brass	high power	
34	21	260	22.0 - 33.0				8.636	4.318		UBR260	Aluminum		
34	21	260	22.0 - 33.0				8.636	4.318		UBR260	Brass		
28	22	320	26.5 - 40.0	1.50	10	1	7.112	3.556	38.1	UBR320	Aluminum	high power	**WA-R028-XXH1**
28	22	320	26.5 - 40.0	1.50	10	1	7.112	3.556	38.1	UBR320	Brass	high power	
22	23	400	33.0 - 50.0				5.690	2.845			Aluminum		
22	23	400	33.0 - 50.0				5.690	2.845		UG383/U	Brass		

1) Recommended power at a pressure of one atmosphere
2) XX: Please refer to page HH2 for the appropriate connector code.
3) For non Standard Flanges and/or Specifications, a special Part Number will be assigned.

Dimensions shown are Inches over Millimeters or vice versa. Standard units have stainless finish (last 2 digits of the P/N are -02). Interfaces are per DIN 47 223, DIN 47 226, IEC 169-4, IEC 169-7, IEC 169-8, IEC 457-2, IEC 60169-5, IEEE 287, MIL-PRF-39012, MIL DTL-24044, MIL DTL-3643,MIL-STD-348B, where applicable

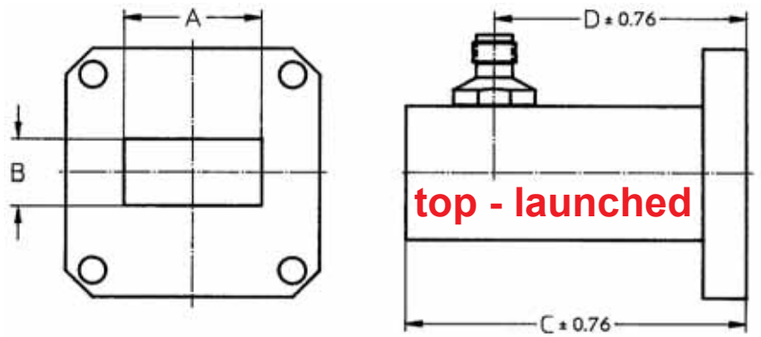

Designation			Frequency (GHz)	VSWR max.	Recommended Power Rating1)		Dimensions (mm)				Standard Flange3)	Standard Material	Comment	Part Number2)
EIA (WR)	DEF (WG)	IEC (R)			CW (W)	peak (KW)	A	B	C	D				
650	6	14	1.12 - 1.70				165.10	82.55			UG418A/U	Aluminum		**WA-R650-XX01**
650	6	14	1.12 - 1.70				165.10	82.55			UG417A/U	Brass		
510	7	18	1.45 - 2.20				129.54	64.77			UG1717/U	Aluminum		**WA-R510-XX01**
510	7	18	1.45 - 2.20				129.54	64.77			UG1715/U	Brass		
430	8	22	1.70 - 2.60				109.22	54.61			UG1711/U	Aluminum		**WA-R430-XX01**
430	8	22	1.70 - 2.60				109.22	54.61			UG1716/U	Brass		
340	9A	26	2.20 - 3.30				86.36	43.18			UG1713/U	Aluminum		**WA-R340-XX01**
340	9A	26	2.20 - 3.30				86.36	43.18			UG1712/U	Brass		
284	10	32	2.60 - 3.95	1.10	250	8	72.136	34.036	95.3	69.9	UG1725/U	Aluminum		**WA-R284-XX01**
284	10	32	2.60 - 3.95	1.10	250	8	72.136	34.036	95.3	69.9	UG1724/U	Brass		
284	10	32	2.60 - 3.95	1.35	1000	20	72.136	34.036	95.3	69.9	UG1725/U	Aluminum	high power	**WA-H284-XX01**
284	10	32	2.60 - 3.95	1.35	1000	20	72.136	34.036	95.3	69.9	UG1724/U	Brass	high power	
284R/H			2.60 - 3.95	1.10	250	4	72.136	17.018	95.3	69.9		Aluminum		
284R/H			2.60 - 3.95	1.10	250	4	72.136	17.018	95.3	69.9		Brass		
229	11A	40	3.30 - 4.90	1.10	250	8	58.166	29.083	76.2	55.9	UG1727/U	Aluminum		**WA-R229-XX01**
229	11A	40	3.30 - 4.90	1.10	250	8	58.166	29.083	76.2	55.9	UG1726/U	Brass		
229	11A	40	3.30 - 4.90	1.35	1000	20	58.166	29.083	76.2	55.9	UG1727/U	Aluminum	high power	**WA-H229-XX01**
229	11A	40	3.30 - 4.90	1.35	1000	20	58.166	29.083	76.2	55.9	UG1726/U	Brass	high power	
187	12	48	3.95 - 5.85	1.10	250	8	47.549	22.149	76.2	59.7	UG1729/U	Aluminum		**WA-R187-XX01**
187	12	48	3.95 - 5.85	1.10	250	8	47.549	22.149	76.2	59.7	UG1728/U	Brass		
187	12	48	3.95 - 5.85	1.35	1000	20	47.549	22.149	76.2	59.7	UG1729/U	Aluminum	high power	**WA-H187-XX01**
187	12	48	3.95 - 5.85	1.35	1000	20	47.549	22.149	76.2	59.7	UG1728/U	Brass	high power	
159	13	58	4.90 - 7.05	1.10	250	8	40.386	20.193	71.1	57.2	UG1731/U	Aluminum		**WA-R159-XX01**
159	13	58	4.90 - 7.05	1.10	250	8	40.386	20.193	71.1	57.2	UG1730/U	Brass		
159	13	58	4.90 - 7.05	1.35	750	16	40.386	20.193	71.1	57.2	UG1731/U	Aluminum	high power	**WA-H159-XX01**
159	13	58	4.90 - 7.05	1.35	750	16	40.386	20.193	71.1	57.2	UG1730/U	Brass	high power	

1) At a pressure of one atmosphere
2) XX: Please refer to page HH2 for the appropriate connector code.
3) For non Standard Flanges and/or Specifications, a special Part Number will be assigned.

Dimensions shown are Inches over Millimeters or vice versa. Standard units have stainless finish (last 2 digits of the P/N are -02). Interfaces are per DIN 47 223, DIN 47 226, IEC 169-4, IEC 169-7, IEC 169-8, IEC 457-2, IEC 60169-5, IEEE 287, MIL-PRF-39012, MIL DTL-24044, MIL DTL-3643,MIL-STD-348B, where applicable

Spectrum Elektrotechnik GmbH
Germany
www.spectrum-et.com
sales@spectrum-et.com
Phone: +49 / 89 / 35 48 04 0
Fax: +49 / 89 / 35 48 04 90

Designation			Frequency (GHz)	VSWR max.	Recommended Power Rating1)		Dimensions (mm)				Standard Flange3)	Standard Material	Comment	Part Number3)
EIA (WR)	DEF (WG)	IEC (R)			CW (W)	peak (KW)	A	B	C	D				
137	14	70	5.85 - 8.20	1.10	250	8	34.849	15.799	67.3	50.8	UG1733/U	Aluminum		**WA-R137-XX01**
137	14	70	5.85 - 8.20	1.10	250	8	34.849	15.799	67.3	50.8	UG1732/U	Brass		
137	14	70	5.85 - 8.20	1.35	500	14	34.849	15.799	67.3	50.8	UG1733/U	Aluminum	high power	**WA-H137-XX01**
137	14	70	5.85 - 8.20	1.35	500	14	34.849	15.799	67.3	50.8	UG1732/U	Brass	high power	
112	15	84	7.05 - 10.0	1.10	250	8	28.499	12.624	63.5	45.7	UG138/U	Aluminum		**WA-R112-XX01**
112	15	84	7.05 - 10.0	1.10	250	8	28.499	12.624	63.5	45.7	UG51/U	Brass		
112	15	84	7.05 - 10.0	1.03	250	8	28.499	12.624	63.5	45.7	UG138/U	Aluminum	best VSWR	**WA-M112-XX01**
112	15	84	7.05 - 10.0	1.03	250	8	28.499	12.624	63.5	45.7	UG51/U	Brass	best VSWR	
102			7.00 - 11.0	1.10	250	8	25.908	12.624	63.5	45.7		Aluminum		**WA-R102-XX01**
102			7.00 - 11.0	1.10	250	8	25.908	12.624	63.5	45.7	UG1493/U	Brass		
102			7.00 - 11.0	1.35	500	12	25.908	12.624	63.5	45.7		Aluminum	high power	**WA-H102-XX01**
102			7.00 - 11.0	1.35	500	12	25.908	12.624	63.5	45.7	UG1493/U	Brass	high power	
96			7.00 - 17.0	1.35	250	4	24.511	8.128	141.2	131.1		Aluminum		**WA-R096-XX01**
96			7.00 - 17.0	1.35	250	4	24.511	8.128	141.2	131.1		Brass		
90	16	100	8.20 - 12.4	1.10	250	8	22.860	10.160	55.9	43.2	UG135/U	Aluminum		**WA-R090-XX01**
90	16	100	8.20 - 12.4	1.10	250	8	22.860	10.160	55.9	43.2	UG39/U	Brass		
90	16	100	8.20 - 12.4	1.03	250	8	22.860	10.160	55.9	43.2	UG135/U	Aluminum	best VSWR	**WA-M090-XX01**
90	16	100	8.20 - 12.4	1.03	250	8	22.860	10.160	55.9	43.2	UG39/U	Brass	best VSWR	
90	16	100	8.20 - 12.4	1.35	450	10	22.860	10.160	55.9	43.2	UG135/U	Aluminum	high power	**WA-H090-XX01**
90	16	100	8.20 - 12.4	1.35	450	10	22.860	10.160	55.9	43.2	UG39/U	Brass	high power	
90R/H			8.20 - 12.4	1.10	250	4	22.860	5.08	55.9	43.2		Aluminum		
90R/H			8.20 - 12.4	1.10	250	4	22.860	5.08	55.9	43.2		Brass		
75	17	120	10.0 - 15.0	1.10	250	7	19.050	9.525	55.9	43.2	UBR120	Aluminum		**WA-R075-XX01**
75	17	120	10.0 - 15.0	1.10	250	7	19.050	9.525	55.9	43.2	UBR120	Brass		
75	17	120	10.0 - 15.0	1.03	250	7	19.050	9.525	55.9	43.2	UBR120	Aluminum	best VSWR	**WA-M075-XX01**
75	17	120	10.0 - 15.0	1.03	250	7	19.050	9.525	55.9	43.2	UBR120	Brass	best VSWR	
75	17	120	10.0 - 15.0	1.35	400	8	19.050	9.525	55.9	43.2	UBR120	Aluminum	high power	**WA-H075-XX01**
75	17	120	10.0 - 15.0	1.35	400	8	19.050	9.525	55.9	43.2	UBR120	Brass	high power	
75R/H			10.0 - 15.0	1.10	250	4	19.050	4.763	55.9	43.2		Aluminum		
75R/H			10.0 - 15.0	1.10	250	4	19.050	4.763	55.9	43.2		Brass		
67			11.0 - 17.0	1.10	200	6	16.967	8.636	55.9	43.2		Aluminum		**WA-R067-XX01**
67			11.0 - 17.0	1.10	200	6	16.967	8.636	55.9	43.2		Brass		
67			11.0 - 17.0	1.35	350	8	16.967	8.636	55.9	43.2		Aluminum	high power	**WA-H067-XX01**
67			11.0 - 17.0	1.35	350	8	16.967	8.636	55.9	43.2		Brass	high power	
62	18	140	12.4 - 18.0	1.10	200	6	15.799	7.899	55.9	43.2	UG1665/U	Aluminum		**WA-R062-XX01**
62	18	140	12.4 - 18.0	1.10	200	6	15.799	7.899	55.9	43.2	UG419/U	Brass		
62	18	140	12.4 - 18.0	1.03	200	6	15.799	7.899	55.9	43.2	UG1665/U	Aluminum	best VSWR	**WA-M062-XX01**
62	18	140	12.4 - 18.0	1.03	200	6	15.799	7.899	55.9	43.2	UG419/U	Brass	best VSWR	
62	18	140	12.4 - 18.0	1.35	350	8	15.799	7.899	55.9	43.2	UG1665/U	Aluminum	high power	**WA-H062-XX01**
62	18	140	12.4 - 18.0	1.35	350	8	15.799	7.899	55.9	43.2	UG419/U	Brass	high power	
51	19	180	15.0 - 22.0	1.10	200	6	12.954	6.477	38.1	30.5	UBR180	Aluminum		**WA-R051-XX01**
51	19	180	15.0 - 22.0	1.10	200	6	12.954	6.477	38.1	30.5	UBR180	Brass		
42	20	220	18.0 - 26.5	1.10	50	4	10.668	4.318	38.1	30.5	UG597/U	Aluminum		**WA-R042-XX01**
42	20	220	18.0 - 26.5	1.10	50	4	10.668	4.318	38.1	30.5	UG595/U	Brass		
34	21	260	22.0 - 33.0	1.10	50	4	8.636	4.318	38.1	30.5	UBR260	Aluminum		**WA-R034-XX01**
34	21	260	22.0 - 33.0	1.10	50	4	8.636	4.318	38.1	30.5	UBR260	Brass		
28	22	320	26.5 - 40.0	1.10	10	1	7.112	3.556	38.1	30.5	UBR320	Aluminum		**WA-R028-XX01**
28	22	320	26.5 - 40.0	1.10	10	1	7.112	3.556	38.1	30.5	UBR320	Brass		
22	23	400	33.0 - 50.0	1.10	10	1	5.690	2.845	38.1	30.5		Aluminum		**WA-R022-XX01**
22	23	400	33.0 - 50.0	1.10	10	1	5.690	2.845	38.1	30.5	U383/U	Brass		

1) At a pressure of one atmosphere
2) XX: Please refer to page HH2 for the appropriate connector code.
3) For non Standard Flanges and/or Specifications, a special Part Number will be assigned.

Dimensions shown are Inches over Millimeters or vice versa. Standard units have stainless finish (last 2 digits of the P/N are -02). Interfaces are per DIN 47 223, DIN 47 226, IEC 169-4, IEC 169-7, IEC 169-8, IEC 457-2, IEC 60169-5, IEEE 287, MIL-PRF-39012, MIL DTL-24044, MIL DTL-3643,MIL-STD-348B, where applicable

Spectrum Elektrotechnik GmbH
Germany
www.spectrum-et.com
sales@spectrum-et.com
Phone: +49 / 89 / 35 48 04 0
Fax: +49 / 89 / 35 48 04 90

Double-Ridge Waveguide

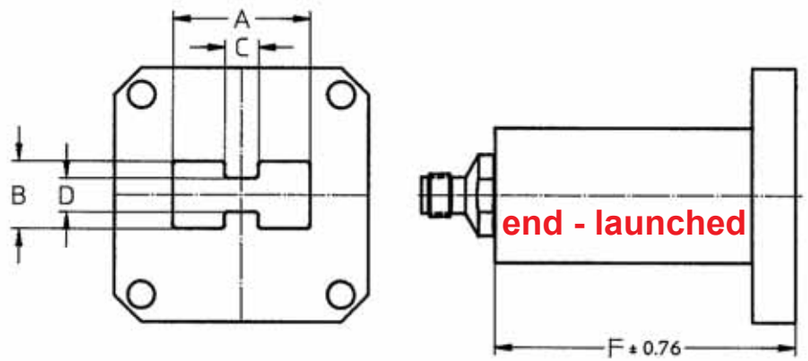

Designation (WRD)	Frequency (GHz)	VSWR max.	Power Rating CW (W)	Dimensions (mm) A	B	C	D	F	Standard Flange (All clear)	Standard Material	Comment	Part Number[2)]
200-D24	2.00-4.80			65.786	30.687	16.459	13.005		cover			
250-D30	2.60-7.80	1.50	1000	42.037	18.161	11.176	3.810	207.0	cover	Aluminum	high power	**WA-D250-XXH1**
250-D30	2.60-7.80	1.50	375	42.037	18.161	11.176	3.810	38.1	cover	Aluminum	short length	
350-D24	3.50-8.20	1.50	1000	37.592	17.475	9.398	7.417	144.0	cover	Aluminum	high power	**WA-D350-XXH1**
350-D24	3.50-8.20	1.50	375	37.592	17.475	9.398	7.417	38.1	cover	Aluminum	short length	
350-D36	3.50-12.4			27.280	11.735	6.833	2.286		cover			
475-D24	4.75-11.0	1.50	850	27.280	12.852	6.909	5.461	104.1	cover	Aluminum	high power	**WA-D475-XXH1**
475-D24	4.75-11.0	1.50	375	27.280	12.852	6.909	5.461	25.4	cover	Aluminum	short length	
500-D36	5.00-18.0	1.50	500	19.101	8.204	4.775	1.600	73.2	cover	Aluminum	high power	**WA-D500-XXH1**
500-D36	5.00-18.0	1.50	250	19.101	8.204	4.775	1.600	25.4	cover	Aluminum	short length	
650-D28	6.50-18.0	1.50	500	18.289	8.153	4.394	2.565	73.2	cover	Aluminum	high power	**WA-D650-XXH1**
650-D28	6.50-18.0	1.50	250	18.289	8.153	4.394	2.565	19.1	cover	Aluminum	short length	
650-D28	6.50-18.0	1.50	500	18.289	8.153	4.394	2.565	49.5	cover	Aluminum	higher power	
750-D24	7.50-18.0	1.50	500	17.551	8.153	4.394	3.454	73.2	cover	Aluminum	high power	**WA-D750-XXH1**
750-D24	7.50-18.0	1.50	250	17.551	8.153	4.394	3.454	19.1	cover	Aluminum	short length	
110-C24	11.00-26.5	1.35	25	11.963	5.563	2.997	2.367	25.4	cover	Aluminum		**WA-D110-XXH1**
180-C24	18.0-40.0	1.50	5	7.315	3.404	1.829	1.448	25.4	cover	Aluminum		**WA-D180-XXH1**

1) At a pressure of one atmosphere
2) XX: Please refer to page HH2 for the appropriate connector code.
3) For non Standard Flanges and/or Specifications, a special code will be assigned.

Dimensions shown are Inches over Millimeters or vice versa. Standard units have stainless finish (last 2 digits of the P/N are -02). Interfaces are per DIN 47 223, DIN 47 226, IEC 169-4, IEC 169-7, IEC 169-8, IEC 457-2, IEC 60169-5, IEEE 287, MIL-PRF-39012, MIL DTL-24044, MIL DTL-3643,MIL-STD-348B, where applicable

Spectrum Elektrotechnik GmbH
Germany
www.spectrum-et.com
sales@spectrum-et.com
Phone: +49 / 89 / 35 48 04 0
Fax: +49 / 89 / 35 48 04 90

Double-Ridge Waveguide

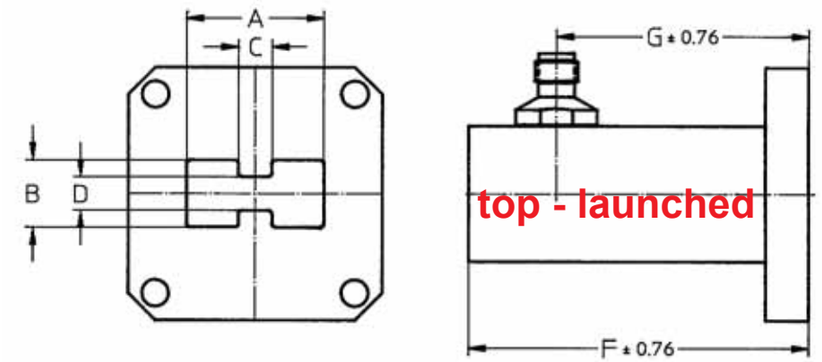

Designation (WRD)	Frequency (GHz)	VSWR max.	Power Rating CW (W)	Dimensions (mm) A	B	C	D	F	G	Standard Flange (All clear)	Standard Material	Comment	Part Number
200-D24	2.00-4.80			65.786	30.687	16.459	13.005			cover			
250-D30	2.60-7.80	1.35	375	42.037	18.161	11.176	3.810	50.8	35.6	cover	Aluminum		**WA-D250-XX01**
250-D30	2.60-7.80	1.50	1000	42.037	18.161	11.176	3.810	101.6	85.9	cover	Aluminum	higher power	
350-D24	3.50-8.20	1.20	375	37.592	17.475	9.398	7.417	41.4	28.7	cover	Aluminum		**WA-D350-XX01**
350-D24	3.50-8.20	1.50	1000	37.592	17.475	9.398	7.417	88.9	68.6	cover	Aluminum	higher power	
350-D36	3.50-12.4			27.280	11.735	6.833	2.286			cover			
475-D24	4.75-11.0	1.20	375	27.686	12.852	6.909	5.461	45.7	33.3	cover	Aluminum		**WA-D475-XX01**
475-D24	4.75-11.0	1.50	750	27.686	12.852	6.909	5.461	45.7	33.3	cover	Aluminum	higher power	
500-D36	5.00-18.0	1.20	250	19.101	8.204	4.775	1.600	49.5	36.3	cover	Aluminum		**WA-D500-XX01**
500-D36	5.00-18.0	1.50	500	19.101	8.204	4.775	1.600	49.5	36.3	cover	Aluminum	higher power	
650-D28	6.50-18.0	1.20	250	18.289	8.153	4.394	2.565	49.5	36.3	cover	Aluminum		**WA-D650-XX01**
650-D28	6.50-18.0	1.20	250	18.289	8.153	4.394	2.565	31.5	19.8	cover	Aluminum	short length	
650-D28	6.50-18.0	1.50	500	18.289	8.153	4.394	2.565	49.5	36.3	cover	Aluminum	higher power	
750-D24	7.50-18.0	1.20	250	17.551	8.153	4.394	3.454	32.5	19.1	cover	Aluminum		**WA-D750-XX01**
750-D24	7.50-18.0	1.50	500	17.551	8.153	4.394	3.454	32.5	19.1	cover	Aluminum	higher power	
110-C24	11.00-26.5	1.35	25	11.963	5.563	2.997	2.367	25.4	19.1	cover	Aluminum		**WA-D110-XX01**
180-C24	18.0-40.0	1.50	5	7.315	3.404	1.829	1.448	25.4	19.1	cover	Aluminum		**WA-D180-XX01**

1) At a pressure of one atmosphere
2) XX: Please refer to page HH2 for the appropriate connector code.
3) For non Standard Flanges and/or Specifications, a special code will be assigned.

Dimensions shown are Inches over Millimeters or vice versa. Standard units have stainless finish (last 2 digits of the P/N are -02). Interfaces are per DIN 47 223, DIN 47 226, IEC 169-4, IEC 169-7, IEC 169-8, IEC 457-2, IEC 60169-5, IEEE 287, MIL-PRF-39012, MIL DTL-24044, MIL DTL-3643,MIL-STD-348B, where applicable

Spectrum Elektrotechnik GmbH
Germany
www.spectrum-et.com
sales@spectrum-et.com
Phone: +49 / 89 / 35 48 04 0
Fax: +49 / 89 / 35 48 04 90

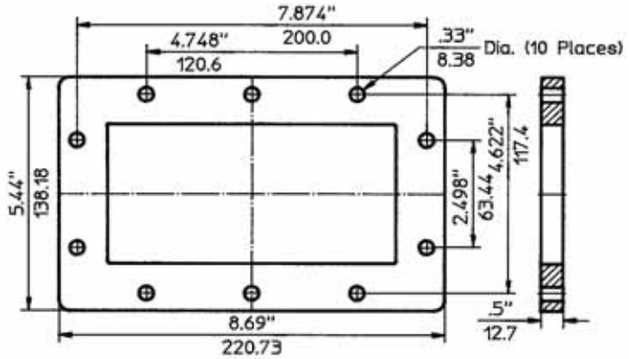

Waveguide Size		Flange Type	Material	JAN	MIL-F-3922/
WR 650	R 14	Flat	Aluminum	UG-1720/U	52-002
			Brass	UG-1714/U	52-001

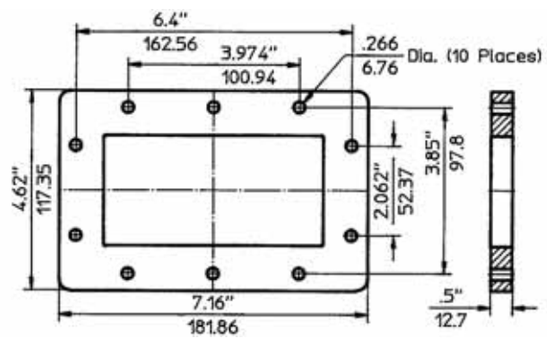

Waveguide Size		Flange Type	Material	JAN	MIL-F-3922/
WR 510	R 18	Flat	Aluminum	UG-1717/U	52-004
			Brass	UG-1715/U	52-003

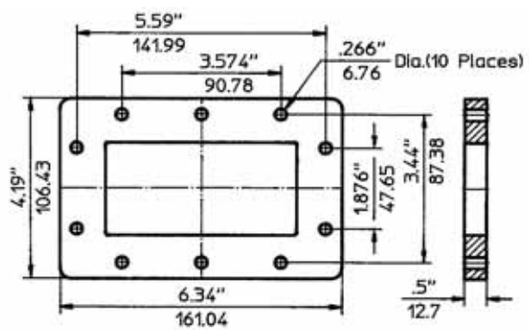

Waveguide Size		Flange Type	Material	JAN	MIL-F-3922/
WR 430	R 22	Flat	Aluminum	UG-1711/U	52-006
			Brass	UG-1716/U	52-005

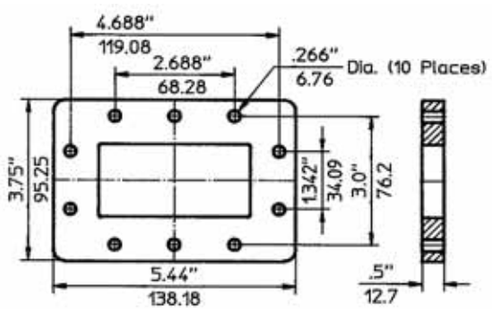

Waveguide Size		Flange Type	Material	JAN	MIL-F-3922/
WR 340	R 26	Flat	Aluminum	UG-1713/U	52-008
			Brass	UG-1712/U	52-007

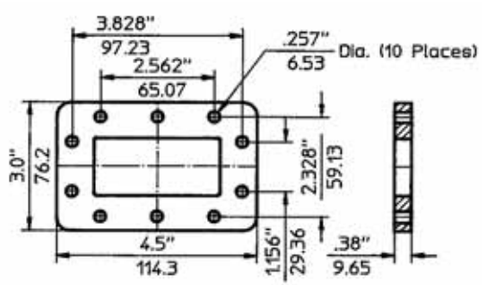

Waveguide Size		Flange Type	Material	JAN	MIL-F-3922/
WR 284	R 32	Flat	Aluminum	UG-1725/U	52-010
			Brass	UG-1724/U	52-009

Dimensions shown are Inches over Millimeters or vice versa. Standard units have stainless finish (last 2 digits of the P/N are -02). Interfaces are per DIN 47 223, DIN 47 226, IEC 169-4, IEC 169-7, IEC 169-8, IEC 457-2, IEC 60169-5, IEEE 287, MIL-PRF-39012, MIL DTL-24044, MIL DTL-3643,MIL-STD-348B, where applicable

Spectrum Elektrotechnik GmbH
Germany
www.spectrum-et.com
sales@spectrum-et.com
Phone: +49 / 89 / 35 48 04 0
Fax: +49 / 89 / 35 48 04 90

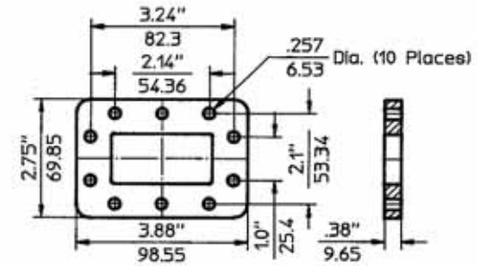

Waveguide Size		Flange Type	Material	JAN	MIL-F-3922/
WR 229	R 40	Flat	Aluminum	UG-1727/U	52-012
			Brass	UG-1726/U	52-011

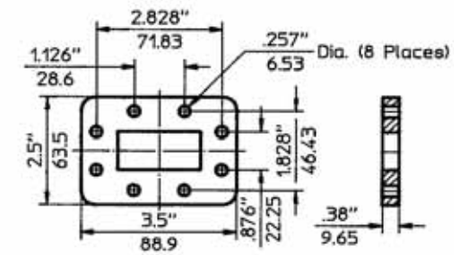

Waveguide Size		Flange Type	Material	JAN	MIL-F-3922/
WR 187	R 48	Flat	Aluminum	UG-1729/U	52-014
			Brass	UG-1728/U	52-013

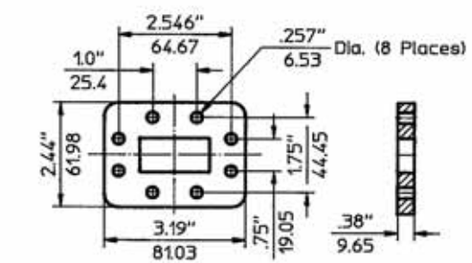

Waveguide Size		Flange Type	Material	JAN	MIL-F-3922/
WR 159	R 58	Flat	Aluminum	UG-1731/U	52-016
			Brass	UG-1730/U	52-015

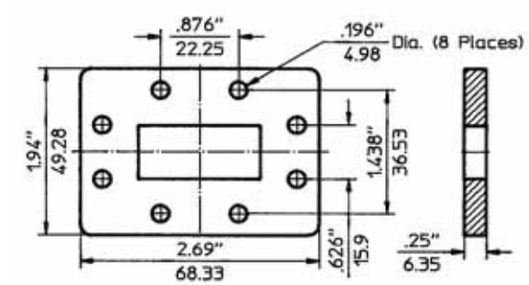

Waveguide Size		Flange Type	Material	JAN	MIL-F-3922/
WR 137	R 70	Flat	Aluminum	UG-1733/U	52-018
			Brass	UG-1732/U	52-017

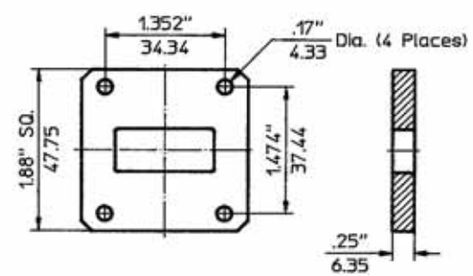

Waveguide Size		Flange Type	Material	JAN	MIL-F-3922/
WR 112	R 84	Flat	Aluminum	UG-138/U	52-004
			Brass	UG-51/U	52-002

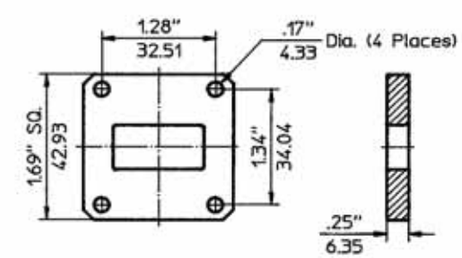

Waveguide Size		Flange Type	Material		MIL-F-3922/
WR 102		Cover	Aluminum		
			Brass		

Dimensions shown are Inches over Millimeters or vice versa. Standard units have stainless finish (last 2 digits of the P/N are -02). Interfaces are per DIN 47 223, DIN 47 226, IEC 169-4, IEC 169-7, IEC 169-8, IEC 457-2, IEC 60169-5, IEEE 287, MIL-PRF-39012, MIL DTL-24044, MIL DTL-3643,MIL-STD-348B, where applicable

Spectrum Elektrotechnik GmbH
Germany
www.spectrum-et.com
sales@spectrum-et.com
Phone: +49 / 89 / 35 48 04 0
Fax: +49 / 89 / 35 48 04 90

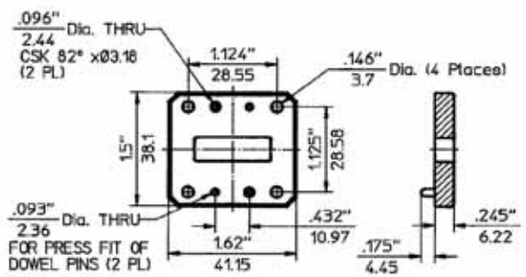

Waveguide Size		Flange Type	Material	JAN	MIL-F-3922/
WR 96		Cover	Aluminum		
			Brass		

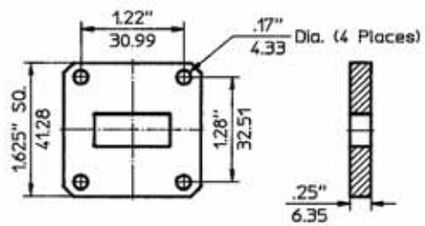

Waveguide Size		Flange Type	Material	JAN	MIL-F-3922/
WR 90	R 100	Cover	Aluminum	UG-135/U	52-003
			Brass	UG-39/U	52-001

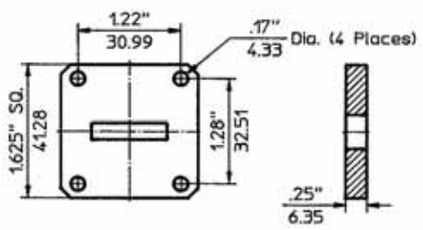

Waveguide Size		Flange Type	Material	JAN	MIL-F-3922/
WR 90 R/H		Cover	Aluminum		
			Brass		

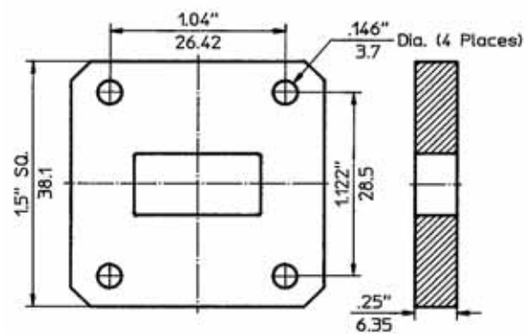

Waveguide Size		Flange Type	Material	IEC	
WR 75	R 120	Cover	Aluminum	UBR 120	
			Brass	UBR 120	

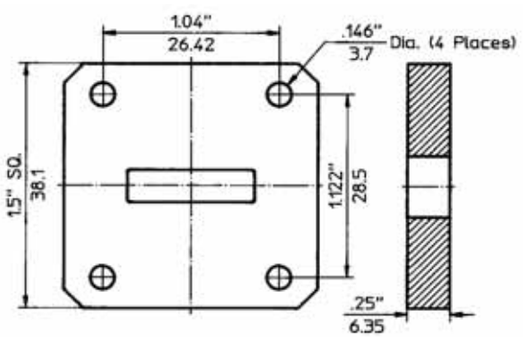

Waveguide Size		Flange Type	Material	JAN	MIL-F-3922/
WR 75 R/H		Cover	Aluminum	UBR 120	
			Brass	UBR 120	

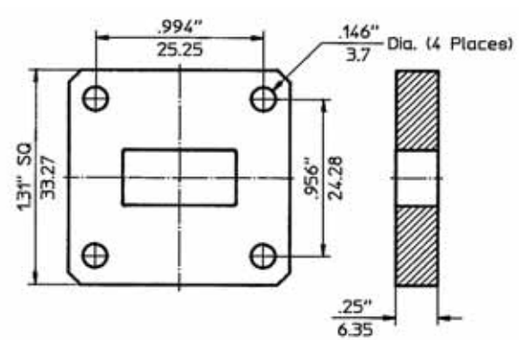

Waveguide Size		Flange Type	Material	JAN	MIL-F-3922/
WR 67		Cover	Aluminum		
			Brass		

Dimensions shown are Inches over Millimeters or vice versa. Standard units have stainless finish (last 2 digits of the P/N are -02). Interfaces are per DIN 47 223, DIN 47 226, IEC 169-4, IEC 169-7, IEC 169-8, IEC 457-2, IEC 60169-5, IEEE 287, MIL-PRF-39012, MIL DTL-24044, MIL DTL-3643,MIL-STD-348B, where applicable

Spectrum Elektrotechnik GmbH
Germany
www.spectrum-et.com
sales@spectrum-et.com
Phone: +49 / 89 / 35 48 04 0
Fax: +49 / 89 / 35 48 04 90

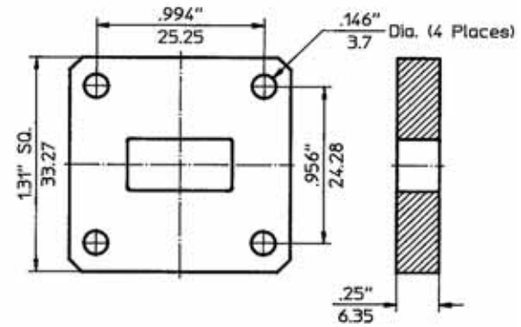

Waveguide Size		Flange Type	Material	JAN	MIL-F-3922/
WR 62	R 140	Cover	Aluminum	UG-1665/U	52-006
			Brass	UG-419/U	52-005

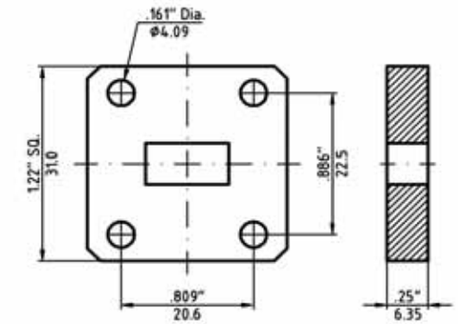

Waveguide Size		Flange Type	Material	IEC	
WR 51	R 180	Cover	Aluminum	UBR 180	
			Brass	UBR 180	

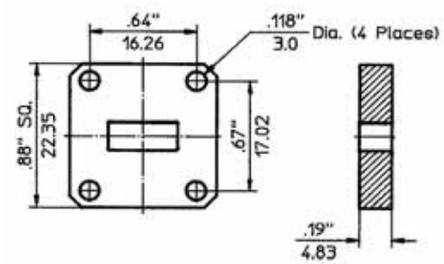

Waveguide Size		Flange Type	Material	JAN	MIL-F-3922/
WR 42	R 220	Cover	Aluminum	UG-597/U	52-002
			Brass	UG-595/U	52-001

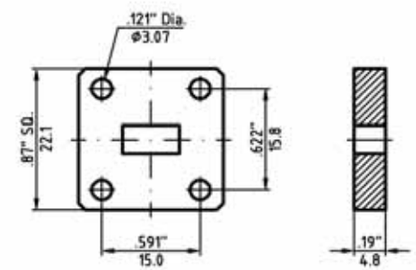

Waveguide Size		Flange Type	Material	IEC	MIL-F-3922/
WR 34	R 260	Cover	Aluminum	UBR 260	
			Brass	UBR 260	

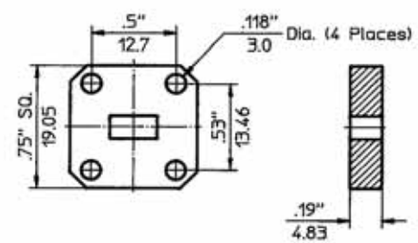

Waveguide Size		Flange Type	Material	IEC	
WR 28	R 320	Cover	Aluminum	UBR 320	
			Brass	UBR 320	

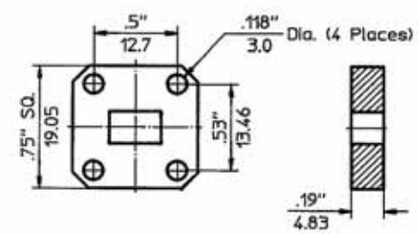

Waveguide Size		Flange Type	Material	JAN	MIL-F-3922/
WR 22	R 400	Cover	Aluminum		
			Brass	UG-383/U	

Dimensions shown are Inches over Millimeters or vice versa. Standard units have stainless finish (last 2 digits of the P/N are -02). Interfaces are per DIN 47 223, DIN 47 226, IEC 169-4, IEC 169-7, IEC 169-8, IEC 457-2, IEC 60169-5, IEEE 287, MIL-PRF-39012, MIL DTL-24044, MIL DTL-3643,MIL-STD-348B, where applicable

Spectrum Elektrotechnik GmbH
Germany
www.spectrum-et.com
sales@spectrum-et.com
Phone: +49 / 89 / 35 48 04 0
Fax: +49 / 89 / 35 48 04 90

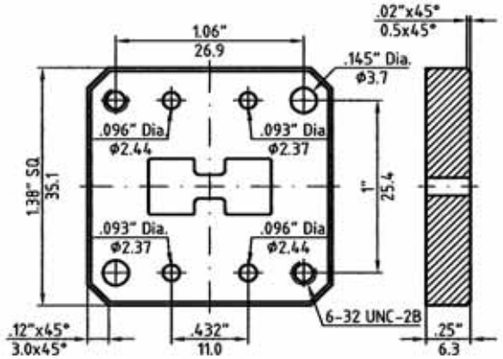

Waveguide Size	Flange Type	Material		MIL-F-39000/
WRD 750 - D24	Cover	Aluminum		3-076
		Brass		3-077

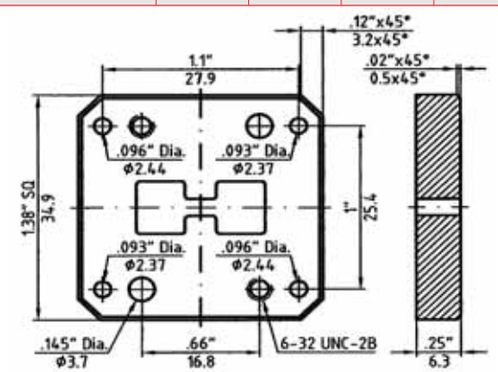

Waveguide Size	Flange Type	Material		
WRD 650 - D28	Cover	Aluminum		
		Brass		

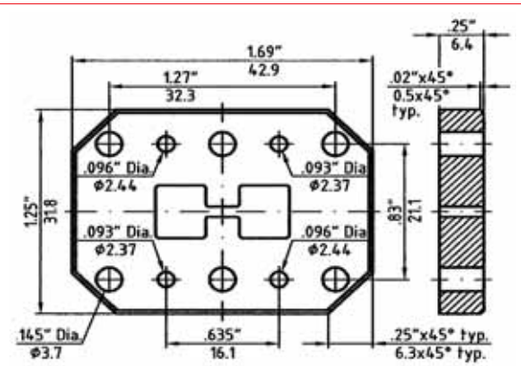

Waveguide Size	Flange Type	Material		
WRD 500 - D36	Cover	Aluminum		
		Brass		

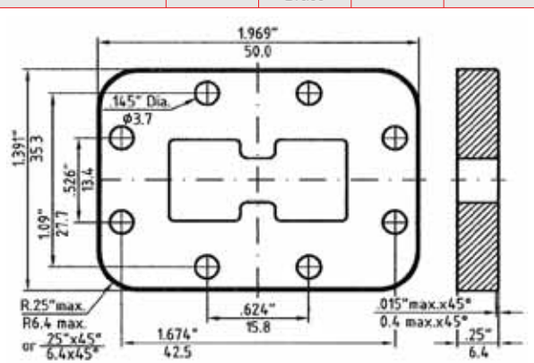

Waveguide Size	Flange Type	Material	JAN	MIL-F-3922/
WRD 475 - D24	Cover	Aluminum	UG-1577/U	3-040
		Brass	UG-1578/U	3-041

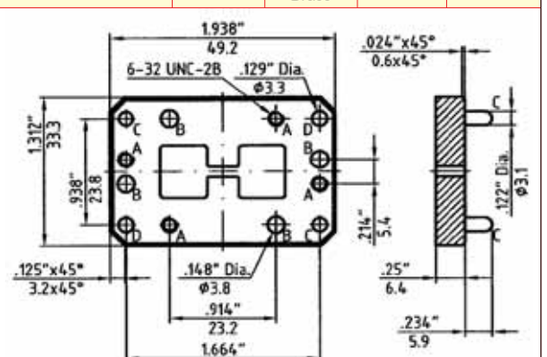

Waveguide Size	Flange Type	Material	JAN	MIL-F-39000/
WRD 350 - D36	Cover	Aluminum	UG-1595/U	4-007
		Brass	UG-1596/U	4-008

Dimensions shown are Inches over Millimeters or vice versa. Standard units have stainless finish (last 2 digits of the P/N are -02). Interfaces are per DIN 47 223, DIN 47 226, IEC 169-4, IEC 169-7, IEC 169-8, IEC 457-2, IEC 60169-5, IEEE 287, MIL-PRF-39012, MIL DTL-24044, MIL DTL-3643,MIL-STD-348B, where applicable

Spectrum Elektrotechnik GmbH
Germany
www.spectrum-et.com
sales@spectrum-et.com
Phone: +49 / 89 / 35 48 04 0
Fax: +49 / 89 / 35 48 04 90

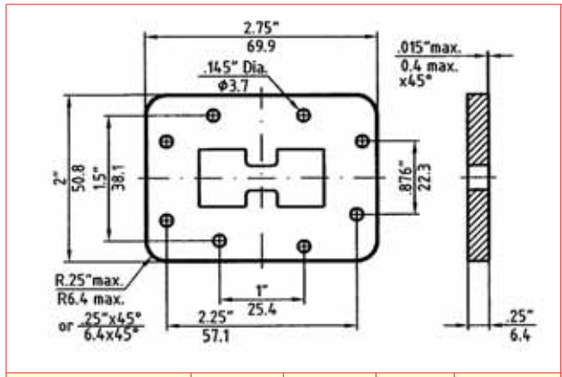

Waveguide Size	Flange Type	Material		MIL-F-39000/
WRD 350 - D24	Cover	Aluminum		3-034
		Brass		3-035

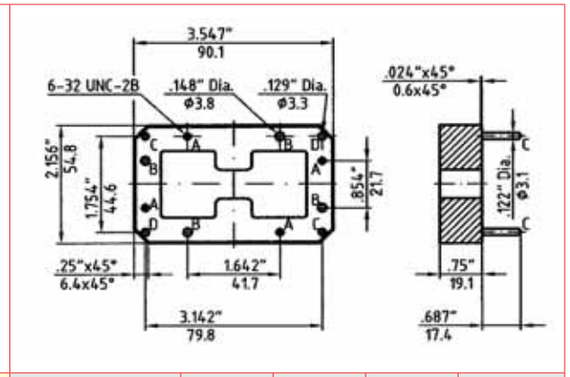

Waveguide Size	Flange Type	Material	JAN	MIL-F-39000/
WRD 200 - D24	Cover	Aluminum	UG-1571/U	3-007
		Brass	UG-1572/U	3-008

Dimensions shown are Inches over Millimeters or vice versa. Standard units have stainless finish (last 2 digits of the P/N are -02). Interfaces are per DIN 47 223, DIN 47 226, IEC 169-4, IEC 169-7, IEC 169-8, IEC 457-2, IEC 60169-5, IEEE 287, MIL-PRF-39012, MIL DTL-24044, MIL DTL-3643,MIL-STD-348B, where applicable

Spectrum Elektrotechnik GmbH
Germany
www.spectrum-et.com
sales@spectrum-et.com
Phone: +49 / 89 / 35 48 04 0
Fax: +49 / 89 / 35 48 04 90

Fine Grain Equalizers and Gain Amplitude Equalizers

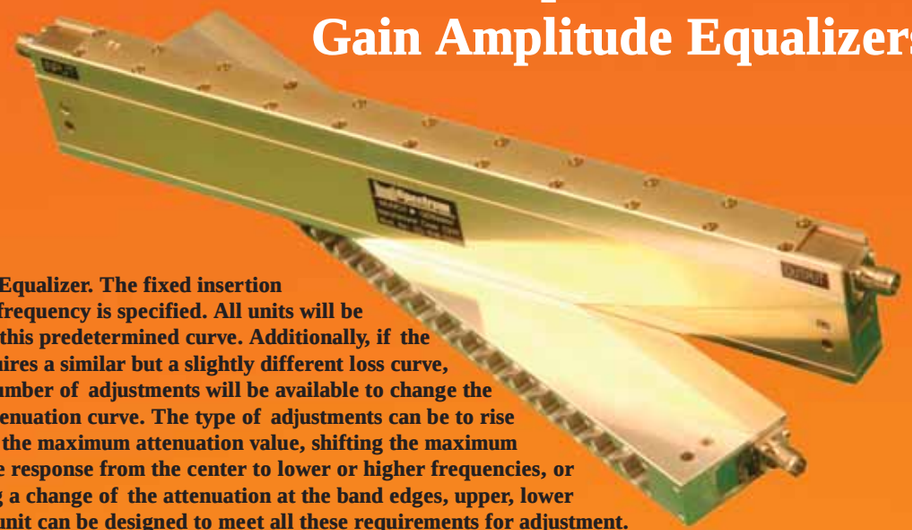

Adjustable Equalizer. The fixed insertion loss versus frequency is specified. All units will be set to meet this predetermined curve. Additionally, if the system requires a similar but a slightly different loss curve, a certain number of adjustments will be available to change the nominal attenuation curve. The type of adjustments can be to rise or to lower the maximum attenuation value, shifting the maximum value of the response from the center to lower or higher frequencies, or establishing a change of the attenuation at the band edges, upper, lower or both. A unit can be designed to meet all these requirements for adjustment.

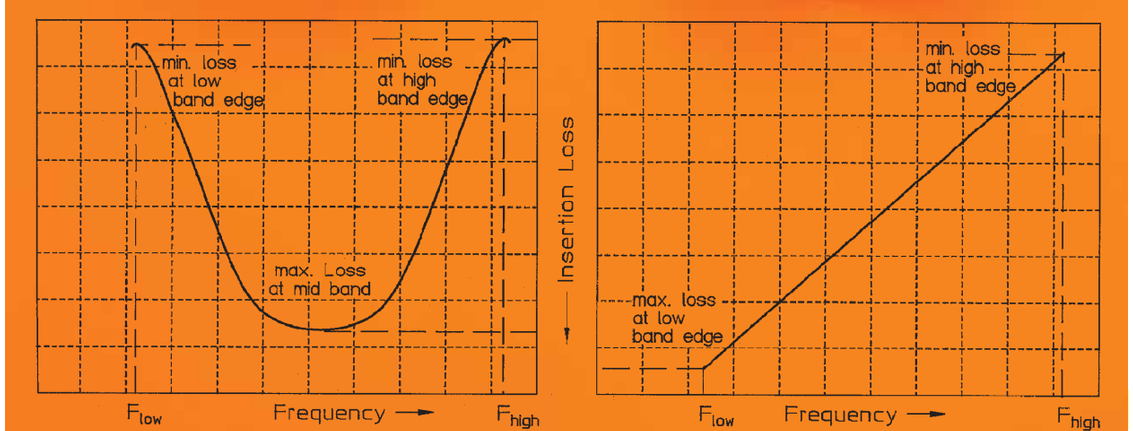

Fundamental Parabolic Equalizer Response

Fundamental Linear Equalizer Response

MULTIPORTS

If your choice of Multiport Adapters is not shown in this section, please refer to the Table below to determine other possible locations. Should you not find your adapter listed in any section, please consult the factory or your Spectrum Elektrotechnik Area Representative.

Multiport Adapters	Section	Page
Multiport Assemblies, Introduction	II	1
Multiport Connectors and Assemblies Overview		4
TQ10 Adapter		6
TQ37 Adapter		8
Test Adapters		10

Although our catalog incorporates a very comprehensive range of products, due to our program of continuous development, there is no way that it will contain every product we manufacture. Please consult the factory for the product you require.
To improve our Standard Products we reserve the right to make changes. Specifications are therefore subject to change without notice.

Dimensions shown are Inches over Millimeters or vice versa. Standard units have stainless finish (last 2 digits of the P/N are -02). Interfaces are per DIN 47 223, DIN 47 226, IEC 169-4, IEC 169-7, IEC 169-8, IEC 457-2, IEC 60169-5, IEEE 287, MIL-PRF-39012, MIL DTL-24044, MIL DTL-3643,MIL-STD-348B, where applicable

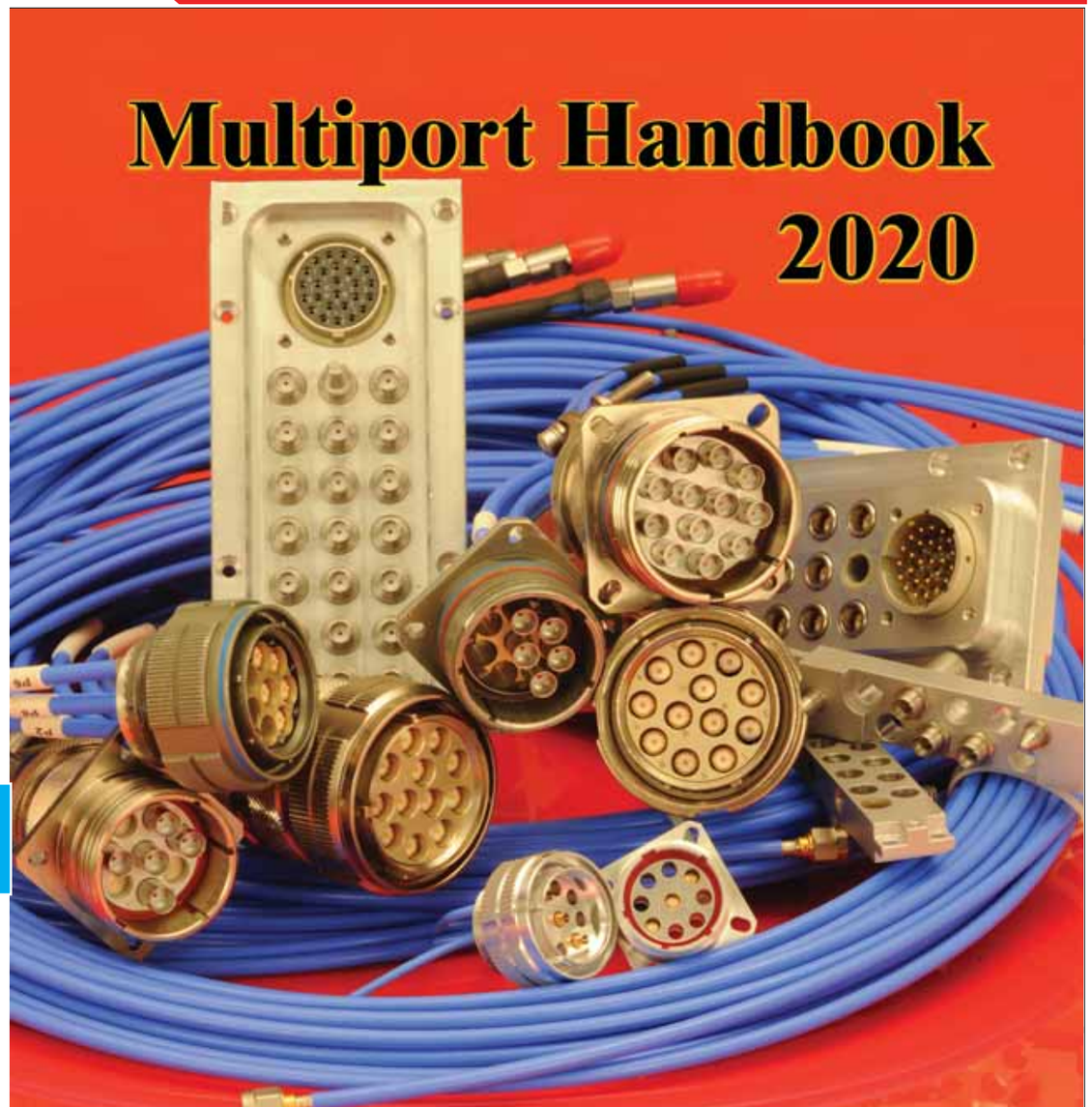

For full details please refer to the Multiport Handbook (over 125 pages), while in this Adapter Handbook only the Multiport Adapters and Acessories will be discussed.

Dimensions shown are Inches over Millimeters or vice versa. Standard units have stainless finish (last 2 digits of the P/N are -02). Interfaces are per DIN 47 223, DIN 47 226, IEC 169-4, IEC 169-7, IEC 169-8, IEC 457-2, IEC 60169-5, IEEE 287, MIL-PRF-39012, MIL DTL-24044, MIL DTL-3643,MIL-STD-348B, where applicable

Spectrum Elektrotechnik GmbH
Germany
www.spectrum-et.com
sales@spectrum-et.com
Phone: +49 / 89 / 35 48 04 0
Fax: +49 / 89 / 35 48 04 90

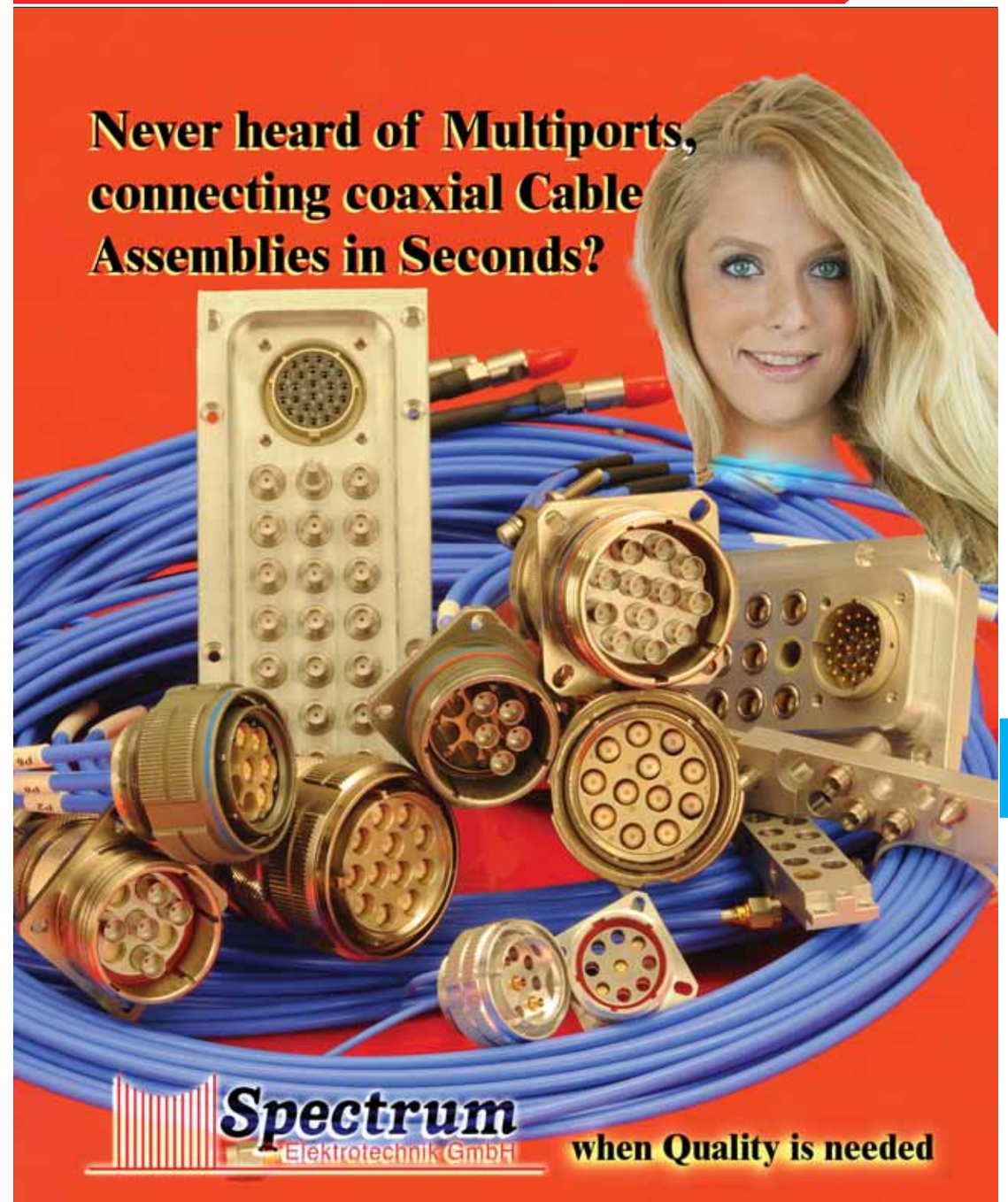

Dimensions shown are Inches over Millimeters or vice versa. Standard units have stainless finish (last 2 digits of the P/N are -02). Interfaces are per DIN 47 223, DIN 47 226, IEC 169-4, IEC 169-7, IEC 169-8, IEC 457-2, IEC 60169-5, IEEE 287, MIL-PRF-39012, MIL DTL-24044, MIL DTL-3643,MIL-STD-348B, where applicable

Spectrum Elektrotechnik GmbH
Germany
www.spectrum-et.com
sales@spectrum-et.com
Phone: +49 / 89 / 35 48 04 0
Fax: +49 / 89 / 35 48 04 90

The Problem: In various applications many coaxial microwave links have to be connected and disconnected. This means threading and unthreading, torquing and untorquing. Very dense packaging is not possible, as there is still room needed for manual threading and for the use of a torque wrench. All connectors in helicopters and aircrafts usually have to be safely secured, e.g. by wiring the coupling nuts of the connectors, using wire holes, a time-consuming process. Threading and torquing, unthreading and untorquing 24 connections, a time consuming process, and lots of space is needed.

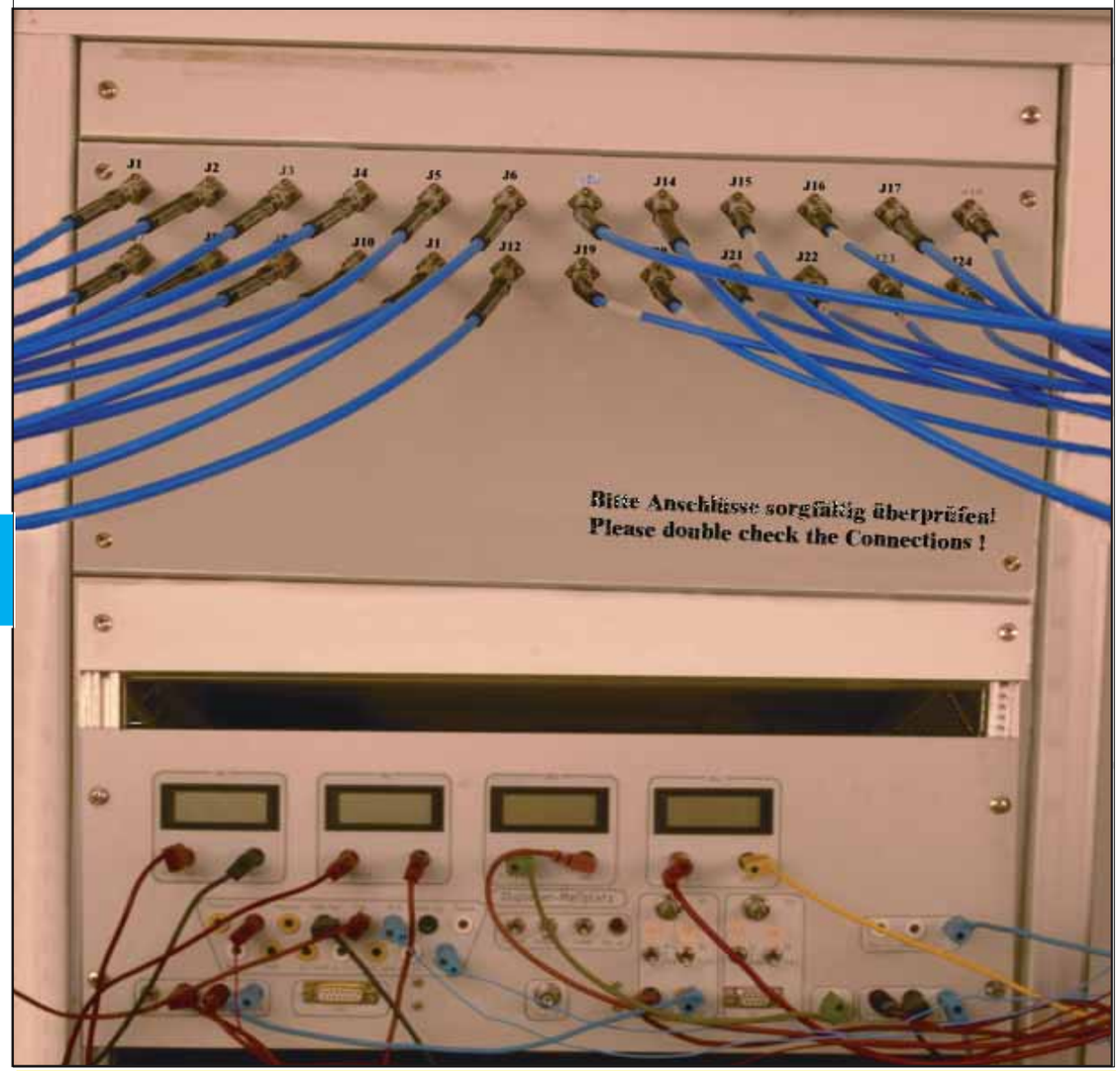

Dimensions shown are Inches over Millimeters or vice versa. Standard units have stainless finish (last 2 digits of the P/N are -02). Interfaces are per DIN 47 223, DIN 47 226, IEC 169-4, IEC 169-7, IEC 169-8, IEC 457-2, IEC 60169-5, IEEE 287, MIL-PRF-39012, MIL DTL-24044, MIL DTL-3643,MIL-STD-348B, where applicable

Spectrum Elektrotechnik GmbH
Germany
www.spectrum-et.com
sales@spectrum-et.com
Phone: +49 / 89 / 35 48 04 0
Fax: +49 / 89 / 35 48 04 90

The Solution: **Spectrum's Multipin Connectors are available with four (4), seven (7), eight (8), ten (10), twelve (12) and twenty-three (23) coaxial inserts (terminating the coaxial cable assemblies) at the Multipin end, connecting all the coaxial cable assemblies at once and in seconds with no need of a torque wrench, no need for safety wires and using minimum space.**

24 cable assemblies in 2 connectors, safely connected and disconnected within seconds.

Dimensions shown are Inches over Millimeters or vice versa. Standard units have stainless finish (last 2 digits of the P/N are -02). Interfaces are per DIN 47 223, DIN 47 226, IEC 169-4, IEC 169-7, IEC 169-8, IEC 457-2, IEC 60169-5, IEEE 287, MIL-PRF-39012, MIL DTL-24044, MIL DTL-3643,MIL-STD-348B, where applicable

Spectrum Elektrotechnik GmbH
Germany
www.spectrum-et.com
sales@spectrum-et.com
Phone: +49 / 89 / 35 48 04 0
Fax: +49 / 89 / 35 48 04 90

AQ-TR0-001NN

4-Hole flanged Adapter to mate with 10 RF Cable Assemblies at both sides in the frequency range to 24 .0 GHz, 40.0 GHz option is available as well.

Dimensions shown are Inches over Millimeters or vice versa. Standard units have stainless finish (last 2 digits of the P/N are -02). Interfaces are per DIN 47 223, DIN 47 226, IEC 169-4, IEC 169-7, IEC 169-8, IEC 457-2, IEC 60169-5, IEEE 287, MIL-PRF-39012, MIL DTL-24044, MIL DTL-3643,MIL-STD-348B, where applicable

Spectrum Elektrotechnik GmbH
Germany
www.spectrum-et.com
sales@spectrum-et.com
Phone: +49 / 89 / 35 48 04 0
Fax: +49 / 89 / 35 48 04 90

Dimensions shown are Inches over Millimeters or vice versa. Standard units have stainless finish (last 2 digits of the P/N are -02). Interfaces are per DIN 47 223, DIN 47 226, IEC 169-4, IEC 169-7, IEC 169-8, IEC 457-2, IEC 60169-5, IEEE 287, MIL-PRF-39012, MIL DTL-24044, MIL DTL-3643,MIL-STD-348B, where applicable

Spectrum Elektrotechnik GmbH
Germany
www.spectrum-et.com
sales@spectrum-et.com
Phone: +49 / 89 / 35 48 04 0
Fax: +49 / 89 / 35 48 04 90

AQ-SB0-001NN

Bulkhead Feedthrough Adapter to mate with 37 RF Cable Assemblies at both sides in the frequency range to 40.0 GHz, using size 16 contacts.

37 Connections in a MIL-DTL-38999 Shell, Size 25

Dimensions shown are Inches over Millimeters or vice versa. Standard units have stainless finish (last 2 digits of the P/N are -02). Interfaces are per DIN 47 223, DIN 47 226, IEC 169-4, IEC 169-7, IEC 169-8, IEC 457-2, IEC 60169-5, IEEE 287, MIL-PRF-39012, MIL DTL-24044, MIL DTL-3643,MIL-STD-348B, where applicable

Spectrum Elektrotechnik GmbH
Germany
www.spectrum-et.com
sales@spectrum-et.com
Phone: +49 / 89 / 35 48 04 0
Fax: +49 / 89 / 35 48 04 90

Connecting 2 x 37 Cable Assemblies in Seconds

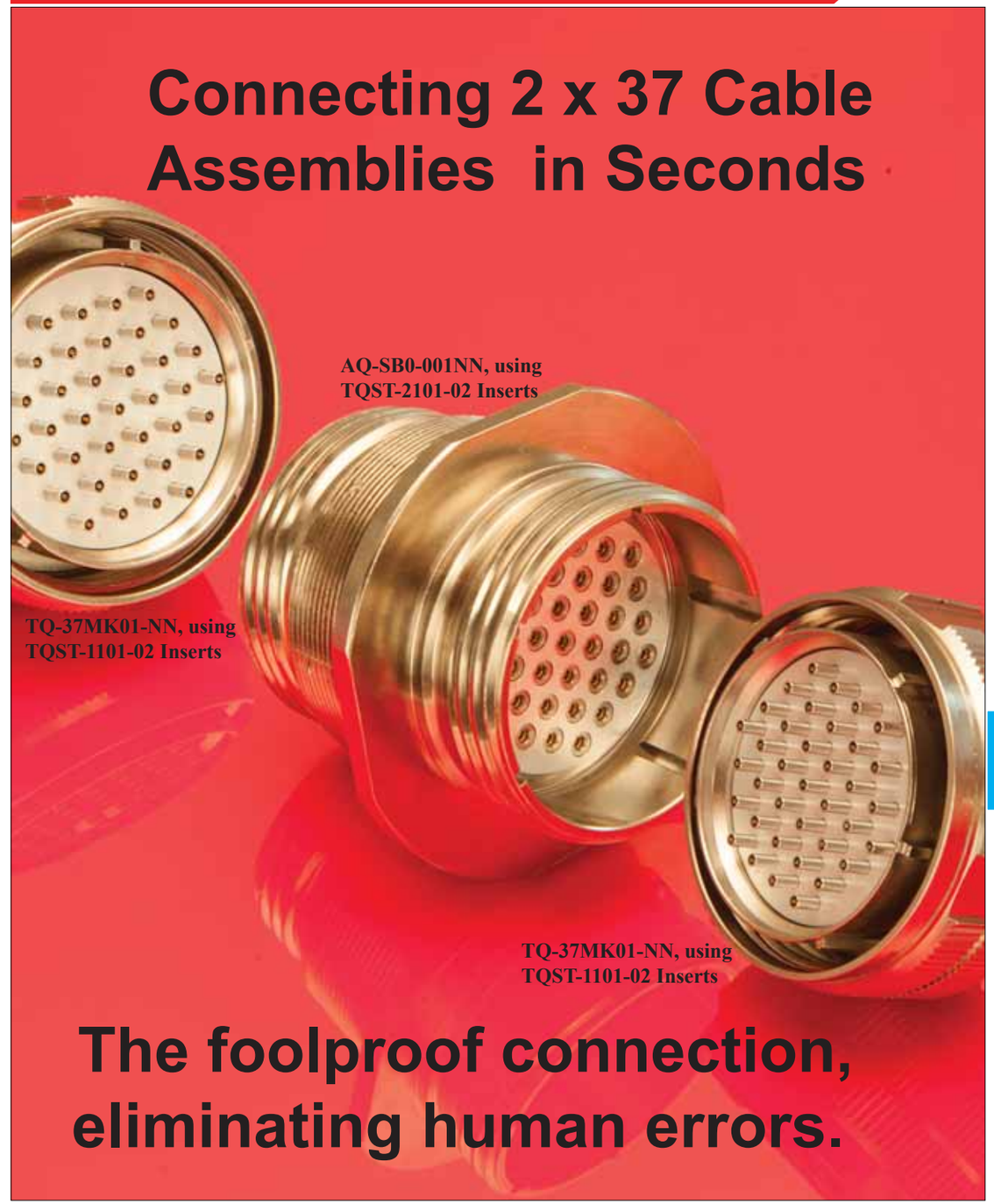

The foolproof connection, eliminating human errors.

Dimensions shown are Inches over Millimeters or vice versa. Standard units have stainless finish (last 2 digits of the P/N are -02). Interfaces are per DIN 47 223, DIN 47 226, IEC 169-4, IEC 169-7, IEC 169-8, IEC 457-2, IEC 60169-5, IEEE 287, MIL-PRF-39012, MIL DTL-24044, MIL DTL-3643,MIL-STD-348B, where applicable

Spectrum Elektrotechnik GmbH
Germany
www.spectrum-et.com
sales@spectrum-et.com
Phone: +49 / 89 / 35 48 04 0
Fax: +49 / 89 / 35 48 04 90

Part - No. 8001-QT21-02

Connectors	TQ-female to SMA-fem.
Frequency	DC - 23.0 GHz
VSWR max.	1.15 : 1

Adapter for testing the TQ-male and TX-male Inserts, and to connect to an SMA-male Test lead

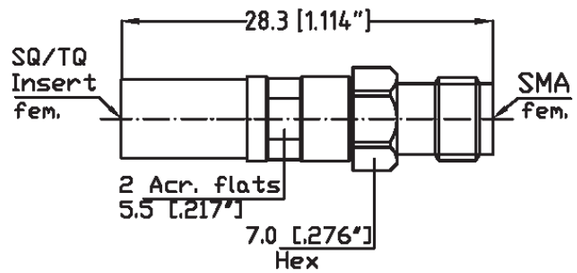

Part - No. 8001-QS21-02

Connectors	TQ-male to SMA-fem.
Frequency	DC - 23.0 GHz
VSWR max.	1.15 : 1

Adapter for testing the TQ-female and TX-female Inserts, and to connect to an SMA-male Test lead

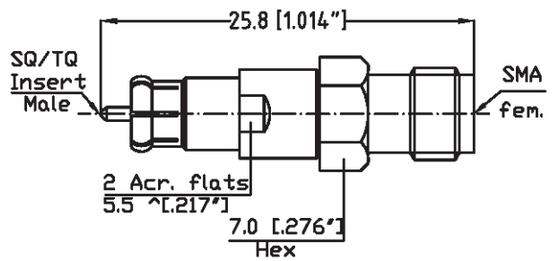

Part - No. 8001-XTKF-02

Connectors	TX-fem. to 2.92mm-fem.
Frequency	DC - 40.0 GHz
VSWR max.	1.15 : 1

Adapter for testing the TX-male Inserts, and to connect to an 2.92mm maleTest lead

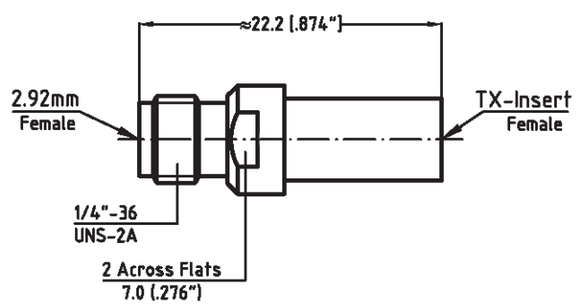

Part - No. 8001-XSKF-02

Connectors	TX-male to 2.92mm-fem.
Frequency	DC - 40.0 GHz
VSWR max.	1.15 : 1

Adapter for testing the TX-female Inserts, and to connect to an 2.92mm male Test lead

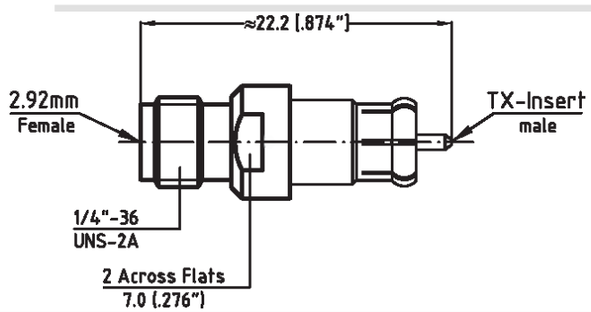

Dimensions shown are Inches over Millimeters or vice versa. Standard units have stainless finish (last 2 digits of the P/N are -02). Interfaces are per DIN 47 223, DIN 47 226, IEC 169-4, IEC 169-7, IEC 169-8, IEC 457-2, IEC 60169-5, IEEE 287, MIL-PRF-39012, MIL DTL-24044, MIL DTL-3643,MIL-STD-348B, where applicable

Spectrum Elektrotechnik GmbH
Germany
www.spectrum-et.com
sales@spectrum-et.com
Phone: +49 / 89 / 35 48 04 0
Fax: +49 / 89 / 35 48 04 90

Part - No. 8001-KFQF-42

Connectors	SMPM-fem. to 2.92mm-fem.
Frequency	DC - 40.0 GHz
VSWR max.	1.06 + 0.005 x f(GHz)

Adapter for testing the SMPM-male Inserts, and to connect to an 2.92mm maleTest lead

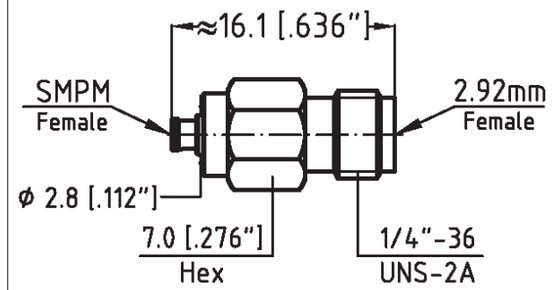

Part - No. 8001-KFQM-02

Connectors	SMPM-male. to 2.92mm-fem.
Frequency	DC - 40.0 GHz
VSWR max.	1.03 + 0.005 x f (GHz)

Adapter for testing the SMPM-female Inserts, and to connect to an 2.92mm maleTest lead

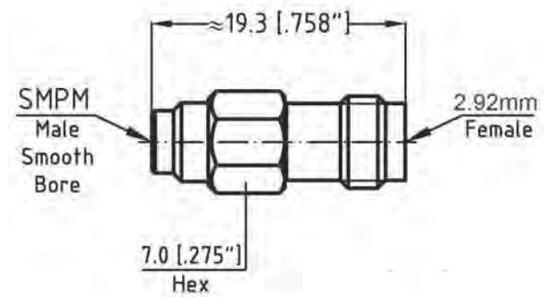

Part - No. 8001-KFS6-02

Connectors	Size16-f to 2.92mm-f
Frequency	DC - 40.0 GHz
VSWR max.	1.15 : 1

Adapter for testing the Size 16-male Inserts, and to connect to a 2.92mm-male Test lead

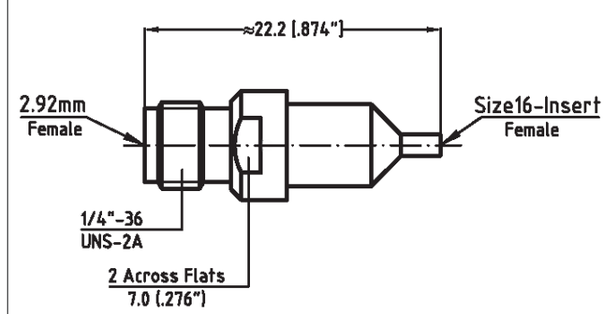

Part - No. 8001-KFS7-02

Connectors	Size 16-m to 2.92mm-f
Frequency	DC - 40.0 GHz
VSWR max.	1.15 : 1

Adapter for testing the Size 16-female Inserts, and to connect to a 2.92mm-male Test lead

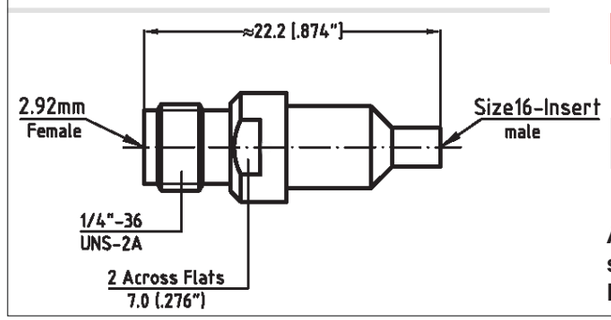

Dimensions shown are Inches over Millimeters or vice versa. Standard units have stainless finish (last 2 digits of the P/N are -02). Interfaces are per DIN 47 223, DIN 47 226, IEC 169-4, IEC 169-7, IEC 169-8, IEC 457-2, IEC 60169-5, IEEE 287, MIL-PRF-39012, MIL DTL-24044, MIL DTL-3643,MIL-STD-348B, where applicable

Spectrum Elektrotechnik GmbH
Germany
www.spectrum-et.com
sales@spectrum-et.com
Phone: +49 / 89 / 35 48 04 0
Fax: +49 / 89 / 35 48 04 90

	Formulae
Attenuation (Theoretical) $\alpha \left[\frac{dB}{m}\right]$	$\alpha = \alpha_c + \alpha_d$ α_d = Attenuation dielectric α_c = Attenuation conductors
Attenuation (Inner/Outer Conductor) $\alpha_c \left[\frac{dB}{m}\right]$	$\alpha_c = \frac{\sqrt{\pi \cdot f \cdot \mu_o \cdot \mu_r \cdot \varepsilon_r}}{6 \cdot \ln 10 \cdot \ln\left(\frac{D}{d}\right)} \left(\frac{\sqrt{\rho_i}}{d} + \frac{\sqrt{\rho_a}}{D}\right)$ d = Outer Diameter of Inner Conductor [cm] D = Inner Diameter of Outer Conductor [cm] ε_r = Relative Permittivity (Dielectric Constant) f = Frequency [Hz] μ_r = Relative Permeability μ_o = Permeab. of Free Space $\left[\frac{H}{m}\right]$ $\mu_o = 4\pi \cdot 10^{-7} \left[\frac{H}{m}\right]$ ρ_i = Resistivity of Inner Conductor [Ωcm] ρ_a = Resistivity of Outer Conductor [Ωcm] π = 3.1415927
Attenuation (Dielectric) $\alpha_d \left[\frac{dB}{m}\right]$	$\alpha_d = \frac{20\pi\sqrt{\varepsilon_r}}{\lambda \cdot \ln 10} \cdot \tan\delta$ ε_r = Relative Permittivity (Dielectric Constant) λ = Wavelength in Free Space [m] $\tan\delta$ = Loss tangent
Capacitance $C \left[\frac{F}{m}\right]$	$C = \frac{2\pi\varepsilon_o\varepsilon_r}{\ln\left(\frac{D}{d}\right)}$ d = Outer Diameter of Inner Conductor [cm] D = Inner Diameter of Outer Conductor [cm] ε_o = Permittivity of Free Space [F/m] $\varepsilon_o = 8.855 \cdot 10^{-12} \left[\frac{F}{m}\right]$ ε_r = Relative Permittivity (Dielectric Constant) π = 3.1415927
Cutoff Frequency $f_c \left[Hz\right]$	$f_c = \frac{2 \cdot c}{\pi\,(D + d)\sqrt{\mu_r \varepsilon_r}}$ μ_r = Relative Permeability π = 3.1415927 c = Velocity of Light in Free Space [cm/s] $c = 2.997925 \cdot 10^{10} \left[\frac{cm}{s}\right] \approx 3 \cdot 10^{10} \left[\frac{cm}{s}\right]$ d = Outer Diameter of Inner Conductor [cm] D = Inner Diameter of Outer Conductor [cm] ε_r = Relative Permittivity (Dielectric Constant)
Electrical Phase $\phi \left[°\right]$	$\phi = \frac{-360° \sqrt{\varepsilon_r} \cdot f \cdot l}{c}$ c = Velocity of Light in Free Space [cm/s] $c = 2.997925 \cdot 10^{10} \left[\frac{cm}{s}\right] \approx 3 \cdot 10^{10} \left[\frac{cm}{s}\right]$ f = Frequency [Hz] ε_r = Relative Permittivity (Dielectric Constant) l = Mechanical Length [cm]
Inductance $L \left[\frac{H}{m}\right]$	$L = \frac{\mu_o \mu_r}{2\pi} \cdot \ln\left(\frac{D}{d}\right)$ d = Outer Diameter of Inner Conductor [cm] D = Inner Diameter of Outer Conductor [cm] μ_o = Permeability of Free Space $\left[\frac{H}{m}\right]$ $\mu_o = 4\pi \cdot 10^{-7} \left[\frac{H}{m}\right]$ μ_r = Relative Permeability π = 3.1415927

Dimensions shown are Inches over Millimeters or vice versa. Standard units have stainless finish (last 2 digits of the P/N are -02). Interfaces are per DIN 47 223, DIN 47 226, IEC 169-4, IEC 169-7, IEC 169-8, IEC 457-2, IEC 60169-5, IEEE 287, MIL-PRF-39012, MIL DTL-24044, MIL DTL-3643,MIL-STD-348B, where applicable

Spectrum Elektrotechnik GmbH
Germany
www.spectrum-et.com
sales@spectrum-et.com
Phone: +49 / 89 / 35 48 04 0
Fax: +49 / 89 / 35 48 04 90

Equations for Coaxial Transmission Lines

	Formulae
Impedance $Z_o \left[\Omega\right]$	$Z_o = \frac{59.959}{\sqrt{\varepsilon_r}} \cdot \ln\left(\frac{D}{d}\right) = \frac{60}{\sqrt{\varepsilon_r}} \cdot \ln\left(\frac{D}{d}\right)$ d = Outer Diameter of Inner Conductor [cm] D = Inner Diameter of Outer Conductor [cm] ε_r = Relative Permittivity (Dielectric Constant)
Reflection Coefficient r	$r = \frac{Z_r - Z_o}{Z_r + Z_o} = \frac{VSWR - 1}{VSWR + 1}$ Z_o = Characteristic Impedance [Ω] Z_r = Terminating Impedance [Ω]
Skin Depth $\delta_s \left[\mu m\right]$	$\delta_s = \frac{10^6}{\sqrt{\frac{\pi f \mu_o \mu_r}{\delta}}}$ f = Frequency [Hz] μ_o = Permeability of Free Space $\left[\frac{H}{m}\right]$ $\mu_o = 4\pi \cdot 10^{-7} \left[\frac{H}{m}\right]$ μ_r = Relative Permeability π = 3.1415927 δ = Resistivity [Ωm]
Time Delay $T_D \left[s\right]$	$T_D = \frac{\sqrt{\varepsilon_r}}{f}$ ε_r = Relative Permittivity (Dielectric Constant) f = Frequency [Hz]
Velocity of Propagation $V_p \left[\frac{cm}{s}\right]$	$V_p = \frac{c}{\sqrt{\varepsilon_r}}$ c = Velocity of Light in Free Space [cm/s] $c = 2.997925 \cdot 10^{10} \left[\frac{cm}{s}\right] \approx 3 \cdot 10^{10} \left[\frac{cm}{s}\right]$ ε_r = Relative Permittivity (Dielectric Constant)
VSWR (Voltage Standing Wave Ratio)	$VSWR = \frac{1 + r}{1 - r} = \frac{Umax}{Umin} = \frac{Imax}{Imin}$ I = Current r = Reflection Coefficient U = Voltage
Wavelength $\lambda \left[cm\right]$	$\lambda = \frac{c}{f} \cdot \frac{1}{\sqrt{\varepsilon_r}}$ c = Velocity of Light in Free Space [cm/s] $c = 2.997925 \cdot 10^{10} \left[\frac{cm}{s}\right] \approx 3 \cdot 10^{10} \left[\frac{cm}{s}\right]$ ε_r = Relative Permittivity (Dielectric Constant) f = Frequency [Hz]

Dimensions shown are Inches over Millimeters or vice versa. Standard units have stainless finish (last 2 digits of the P/N are -02). Interfaces are per DIN 47 223, DIN 47 226, IEC 169-4, IEC 169-7, IEC 169-8, IEC 457-2, IEC 60169-5, IEEE 287, MIL-PRF-39012, MIL DTL-24044, MIL DTL-3643,MIL-STD-348B, where applicable

Spectrum Elektrotechnik GmbH
Germany
www.spectrum-et.com
sales@spectrum-et.com
Phone: +49 / 89 / 35 48 04 0
Fax: +49 / 89 / 35 48 04 90

Dielectric Properties

Material	Dielectric Constant	Dissipation Factor (1KHz)	Velocity %	Time Delay Nanosecond/m	Loss Angle tanδ (· 10⁻³)
FEP Fluorethylenpropylen	2.05	0.0002	69.4	4.79	0.5 ... 1.0
Low Density FEP	1.3 - 1.8	0.0002/0.0004	74 - 87	3.8 - 4.5	
PE Polyethylen	2.25	0.0002	65.9	5.05	0.3 ... 1.0
PTFE Polytetrafluorethylen	2.05	0.0002	69.4	4.79	0.1 ... 0.3

Material Properties

Material		Resistivity ρ (µΩcm)	Conductivity χ $\frac{10^4}{\Omega cm}$	Conductivity Temp. Coefficient 10^{-3}	Thermal Expansion Coefficient 10^{-6}	Thermal Conductivity W/(mK)	Density (g/cm³)	Gravity (N/cm³)	Specific Heat kJ/(kgK)	Melting Point °C
Aluminum	(Al)	2.85 ... 3.33	30 ... 35	3.8	23	210	2.7	0.0265	0.92	660
Brass[1]		6.66 - 8.33	12 ... 15	1.6	18	90	8.4	0.0824		
Chromium	(Cr)	12.98	7.7	21	7.5	64	7.2	0.0705	0.68	1890
Copper	(Cu)	1.72	58	3.9	17	360	8.9	0.0878	0.38	1080
Gold	(Au)	2.43	41	4.1	14	270	19.3	0.1895	0.13	1060
Graphit	(C)	833.0	0.12	-10	7.5	80	1.7	0.0167		
Iron	(Fe)	10.0 - 14.3	7 ... 10	4.5	12	50	7.9	0.0774	0.46	1530
Lead	(Pb)	20.0	5	4.0	30	34	11.3	0.1108	0.13	330
Magnesium	(Mg)	4.54	22	4.2	26	153	1.7	0.0167	1.03	650
Mercury	(Hg)	100.0	1	0.9	182	8.4	13.6	0.1334	0.14	-39
Nichrome[2]		100.0	1	0.17		13.0	7.9	0.0775		
Nickel	(Ni)	9.09 - 11.11	9 ... 11	4.4	13	57	8.9	0.0873	0.44	1450
Platinum	(Pt)	10.0	10	3.9	9	65	21.4	0.2104	0.13	1770
Silver	(Ag)	1.61	62	3.6	20	410	10.5	0.1029	0.23	960
Tantalum	(Ta)	14.28	7	3.5	6.5	50	16.6	0.1628	0.54	2990
Tin	(Sn)	11.11 ... 14.29	7 ... 9	4.4	27	60	7.1	0.0697	0.23	232
Titanium	(Ti)	55.56	1.8	4.1	9	16	4.5	0.0445	0.47	1700
Tungsten	(W)	5.56	18	4.0	5	120	19.3	0.1893	0.13	3380
Zinc	(Zn)	6.25	16	3.7	29	110	7.3	0.0716	0.38	419

1) Brass: 66%Cu, 34%Zn
2) Nichrome: 65%Ni,12%Cr, 23%Fe

J J

Dimensions shown are Inches over Millimeters or vice versa. Standard units have stainless finish (last 2 digits of the P/N are -02). Interfaces are per DIN 47 223, DIN 47 226, IEC 169-4, IEC 169-7, IEC 169-8, IEC 457-2, IEC 60169-5, IEEE 287, MIL-PRF-39012, MIL DTL-24044, MIL DTL-3643,MIL-STD-348B, where applicable

Spectrum Elektrotechnik GmbH
Germany
www.spectrum-et.com
sales@spectrum-et.com
Phone: +49 / 89 / 35 48 04 0
Fax: +49 / 89 / 35 48 04 90

To Convert		Into		Multiply by	Conversely multiply by
Ampere-hours	Ah	coulombs	C	3600,00	2.778 x 10-4
Celsius	°C	Fahrenheit	°F		°C = (°F-32) / 1.8
centimeters	cm	feet	ft	0.03281	30.48
centimeters	cm	inches	in	0.3937	2.54
ergs	erg	joules	J	10^{-7}	10^{7}
Fahrenheit	°F	Celsius	°C		°F = C° * 1.8 + 32
feet	ft	centimeters	cm	30.48	0.03281
feet	ft	yards	yd	0.33333	3
gallons, US	gal	liters	l	3.785	0.2642
grams	g	ounces	oz	0.03527	28.35
horsepower	hp	kilowatts	kW	0.745	1.342
inches	in	centimeters	cm	2.54	0.3937
inches	in	feet	ft	0.08333	12
inch-ponds	inlbf	newton-meters	Nm	0.11298	88.512
joules	J	ergs	erg	10^{7}	10^{-7}
joules	J	kilowatt-hours	kWh	2.788×10^{-7}	3.6×10^{-6}
kilograms [force]	kg m/s²	kilopond	kp	1.020	0.9807
kilograms	kg	pounds	lb	2.205	0.4536
kilopond	kp	kilograms [force]	kg m/s²	0.9807	0.1020
kilopond	Kp	newtons	N	9.807	1.020
kilowatt-hours	kWh	joules	J	3.6×10^{6}	2.778 x 10-7
kilowatts	kW	horsepowers	hp	1.342	0.745
liters	l	gallons	gal	0.2642	3.785
meters	m	microns	µm	10^{6}	10^{-6}
meters	m	miles [nautical]	nmi	5.4×10^{-4}	1852
meters	m	miles [statute]	mi	6.215×10^{-4}	1609
meters	m	mils	mil	3.937×10^{4}	2.54×10^{-5}
microns [micrometer]	µm	meters	m	10^{-6}	10^{6}
miles [nautical]	nmi	meters	m	1852	5.4×10^{-4}
miles [statue]	mi	meters	m	1609,00	6.215×10^{-4}
mils	mil	meters	m	2.54 x 10-5	3.937×10^{4}
newtons	N	kilopond	kp	0.1020	9.807
newtons	N	ounces [force]	oz	3.5968	0.2780
newtons	N	pounds [force]	lbf	0.2248	4.448
newtons-meters	Nm	inch-pounds	inlbf	8.8512	0.11298
newtons-meters	Nm	ounce-inches		1.416×10^{2}	7.062 x 10-3
ounces	oz	grams	g	28.35	0.03527
ounces [force]	oz	newtons	N	0.2780	3.5968
ounce-inches		newton-meters	Nm	7.062×10^{-3}	1.416×10^{2}
pounds	lb	kilograms	kg	0.4536	2.205
pounds [force]	lbf	newtons	N	4448,00	0.2248
yards	yd	feet	ft	3,00	0.33333

J J

Dimensions shown are Inches over Millimeters or vice versa. Standard units have stainless finish (last 2 digits of the P/N are -02). Interfaces are per DIN 47 223, DIN 47 226, IEC 169-4, IEC 169-7, IEC 169-8, IEC 457-2, IEC 60169-5, IEEE 287, MIL-PRF-39012, MIL DTL-24044, MIL DTL-3643,MIL-STD-348B, where applicable

Spectrum Elektrotechnik GmbH
Germany
www.spectrum-et.com
sales@spectrum-et.com
Phone: +49 / 89 / 35 48 04 0
Fax: +49 / 89 / 35 48 04 90

RF Measurement Chart

VSWR = (1+r)/(1-r)	Reflection Coefficient "r"	Return Loss (dB)	Relative to Unity Reference			
			X dB Below Reference	Ref + x (dB)	Ref - x (dB)	Ref ± x Pk to Pk Ripple (dB)
∞	1.00	0	0	-6.00	∞	∞
17.40	0.891	1	1	-5.53	19.28	24.81
8.72	0.794	2	2	-5.08	13.74	18.81
5.85	0.708	3	3	-4.65	10.69	15.34
4.42	0.631	4	4	-4.25	8.66	12.91
3.57	0.562	5	5	-3.87	7.18	11.05
3.01	0.501	6	6	-3.53	6.22	9.75
2.61	0.477	7	7	-3.21	5.14	8.35
2.32	0.398	8	8	-2.91	4.41	7.32
2.10	0.355	9	9	-2.64	3.81	6.45
1.92	0.316	10	10	-2.39	3.30	5.69
1.78	0.282	11	11	-2.16	2.88	5.03
1.67	0.251	12	12	-1.95	2.51	4.46
1.58	0.224	13	13	-1.76	2.20	3.96
1.50	0.200	14	14	-1.58	1.93	3.51
1.43	0.178	15	15	-1.42	1.70	3.12
1.38	0.159	16	16	-1.28	1.50	2.78
1.33	0.141	17	17	-1.15	1.32	2.47
1.29	0.126	18	18	-1.03	1.17	2.20
1.25	0.112	19	19	-0.92	1.03	1.96
1.22	0.100	20	20	-0.83	0.92	1.74
1.196	0.0891	21	21	-0.741	0.811	1.552
1.172	0.0794	22	22	-0.644	0.719	1.382
1.152	0.0708	23	23	-0.594	0.638	1.232
1.134	0.0631	24	24	-0.531	0.566	1.098
1.119	0.0562	25	25	-0.475	0.502	0.977
1.107	0.0501	26	26	-0.434	0.466	0.880
1.096	0.0447	27	27	-0.380	0.397	0.777
1.083	0.0398	28	28	-0.338	0.353	0.691
1.074	0.0355	29	29	-0.303	0.314	0.556
1.065	0.0316	30	30	-0.270	0.279	0.549
1.058	0.0282	31	31	-0.242	0.248	0.490
1.052	0.0251	32	32	-0.215	0.221	0.436
1.046	0.0224	33	33	-0.192	0.197	0.389
1.041	0.0200	34	34	-0.172	0.174	0.347
1.036	0.0178	35	35	-0.153	0.156	0.309
1.032	0.0159	36	36	-0.137	0.138	0.275
1.029	0.0141	37	37	-0.122	0.123	0.245
1.026	0.0126	38	38	-0.109	0.110	0.219
1.023	0.0112	39	39	-0.098	0.098	0.196
1.020	0.0100	40	40	-0.086	0.087	0.173
1.0112	0.0056	45	45	-0.049	0.049	0.097
1.0064	0.0032	50	50	-0.028	0.028	0.056
1.0036	0.0018	55	55	-0.016	0.016	0.031
1.0020	0.0010	60	60	-0.008	0.0086	0.0172

Dimensions shown are Inches over Millimeters or vice versa. Standard units have stainless finish (last 2 digits of the P/N are -02). Interfaces are per DIN 47 223, DIN 47 226, IEC 169-4, IEC 169-7, IEC 169-8, IEC 457-2, IEC 60169-5, IEEE 287, MIL-PRF-39012, MIL DTL-24044, MIL DTL-3643,MIL-STD-348B, where applicable

Spectrum Elektrotechnik GmbH
Germany
www.spectrum-et.com
sales@spectrum-et.com
Phone: +49 / 89 / 35 48 04 0
Fax: +49 / 89 / 35 48 04 90

Torque Wrenches & Interface Gauges

Dimensions shown are Inches over Millimeters or vice versa. Standard units have stainless finish (last 2 digits of the P/N are -02). Interfaces are per DIN 47 223, DIN 47 226, IEC 169-4, IEC 169-7, IEC 169-8, IEC 457-2, IEC 60169-5, IEEE 287, MIL-PRF-39012, MIL DTL-24044, MIL DTL-3643,MIL-STD-348B, where applicable

Spectrum Elektrotechnik GmbH
Germany
www.spectrum-et.com
sales@spectrum-et.com
Phone: +49 / 89 / 35 48 04 0
Fax: +49 / 89 / 35 48 04 90

High Power Duplexers in L- and C-Band

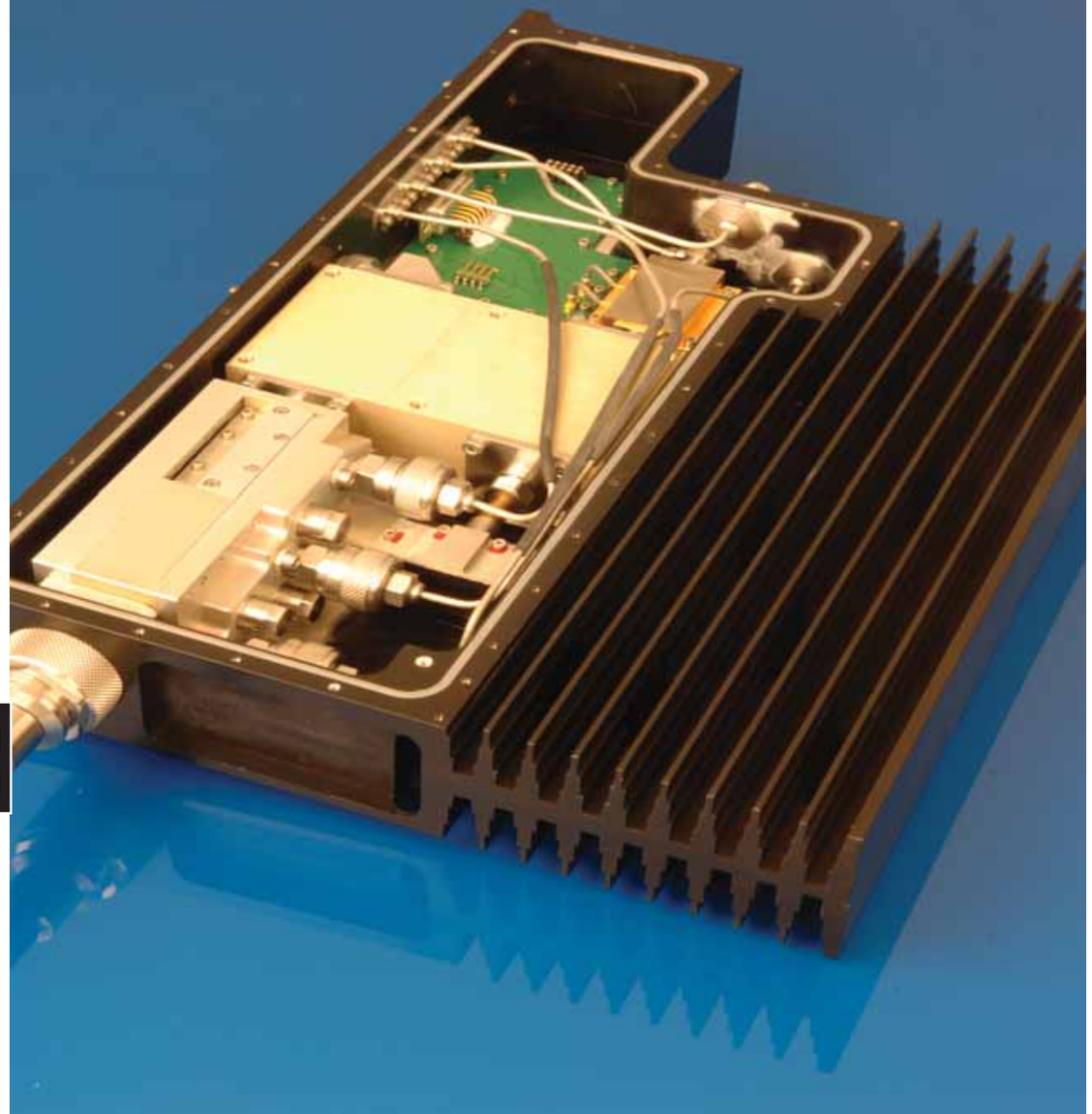

Dimensions shown are Inches over Millimeters or vice versa. Standard units have stainless finish (last 2 digits of the P/N are -02). Interfaces are per DIN 47 223, DIN 47 226, IEC 169-4, IEC 169-7, IEC 169-8, IEC 457-2, IEC 60169-5, IEEE 287, MIL-PRF-39012, MIL DTL-24044, MIL DTL-3643,MIL-STD-348B, where applicable

Spectrum Elektrotechnik GmbH
Germany
www.spectrum-et.com
sales@spectrum-et.com
Phone: +49 / 89 / 35 48 04 0
Fax: +49 / 89 / 35 48 04 90

Cable Assemblies with interchangeable Connectors (Field Replaceable Connectors)

Dimensions shown are Inches over Millimeters or vice versa. Standard units have stainless finish (last 2 digits of the P/N are -02). Interfaces are per DIN 47 223, DIN 47 226, IEC 169-4, IEC 169-7, IEC 169-8, IEC 457-2, IEC 60169-5, IEEE 287, MIL-PRF-39012, MIL DTL-24044, MIL DTL-3643,MIL-STD-348B, where applicable

Spectrum Elektrotechnik GmbH
Germany
www.spectrum-et.com
sales@spectrum-et.com
Phone: +49 / 89 / 35 48 04 0
Fax: +49 / 89 / 35 48 04 90

Spectrum Elektrotechnik GmbH

Part Number	Description	Page
8001-0351-02	1.4 / 4.4 / N-m	FF5
8001-0361-02	1.4 / 4.4 / N-f	FF4
8001-0471-05	1.8 / 5.6-f / BNC-m	FF8
8001-0481-05	1.8 / 5.6-f / BNC-f	FF8
8001-0771-05	1.8 / 5.6-m / BNC-m	FF8
8001-0781-05	1.8 / 5.6-m / BNC-f	FF8
8001-1111-02	SMA-m / SMA-m	P12
8001-1121-02	SMA-m / SMA-f	P8
8001-112F-02	SMA-m / SMA-f Metric	AA14
8001-1131-02	SMA-m / TNC-m	X30
8001-1139-02	SMA-m / TNX-m	Z9
8001-1141-02	SMA-m / TNC-f	X28
8001-1149-02	SMA-m / TNX-f	Z9
8001-1151-02	SMA-m / N-m	K37
8001-1161-02	SMA-m / N-f	K32
8001-1171-02	SMA-m / BNC-m	P15
8001-1179-02	SMA-m / SC-f	N10
8001-1181-02	SMA-m / BNC-f	P14
8001-1190-02	SMA-m / 7mm; center contact with 4 Slots	E14
8001-1196-02	SMA-m / 7mm; center contact with 6 Slots	E14
8001-1M21-02	SMA-m Metric / SMA-f	AA14
8001-2121-00	SMA-f / SMA-f	P4
8001-2121-02	SMA-f / SMA-f	P4
8001-2131-02	SMA-f / TNC-m	X29
8001-2139-02	SMA-f / TNX-m	Z9
8001-2141-02	SMA-f / TNC-f	X25
8001-2149-02	SMA-f / TNX-f	Z9
8001-2151-02	SMA-f / N-m	K35
8001-2161-02	SMA-f / N-f	K30
8001-2171-02	SMA-f / BNC-m	P14
8001-2179-02	SMA-f / SC-f	N10
8001-2181-02	SMA-f / BNC-f	P14
8001-2190-02	SMA-f / 7mm, center contact with 4 Slots	E14
8001-2196-02	SMA-f / 7mm; center contact with 6 Slots	E14
8001-3131-02	TNC-m / TNC-m	X16
8001-3141-02	TNC-m / TNC-f	X10
8001-3151-02	TNC-m / N-m	K47
8001-3161-02	TNC-m / N-f	K41
8001-3171-02	TNC-m / BNC-m	X24
8001-3181-02	TNC-m / BNC-f	X24
8001-3191-02	TNC-m / 3.5mm-m	X22
8001-3192-02	TNC-m / 3.5mm-f	X21
8001-3939-02	TNX-m / TNX-m	Z4
8001-3949-02	TNX-m / TNX-f	Z4
8001-3951-02	TNX-m / N-m	Z8
8001-3961-02	TNX-m / N-f	Z7
8001-3990-02	TNX-m / 7mm, CC with 4 slots	Z6
8001-3991-02	TNX-m / 3.5mm-m	Z5

Part Number	Description	Page
8001-3992-02	TNX-m / 3.5mm-f	Z5
8001-3996-02	TNX-m / 7mm ; center contact with 6 Slots	Z6
8001-3E61-13	3 1/8 / N-f	FF20
8001-4141-02	TNC-f / TNC-f	X6
8001-4151-02	TNC-f / N-m	K44
8001-4160-02	TNC-f / N-f, 4-hole flange	K40
8001-4161-02	TNC-f / N-f	K39
8001-4171-02	TNC-f / BNC-m	X24
8001-4181-02	TNC-f / BNC-f	X24
8001-4191-02	TNC-f / 3.5mm-m	X21
8001-4192-02	TNC-f / 3.5mm-f	X21
8001-4199-13	TNC-f / Custom Connector	O7
8001-4949-02	TNX-f / TNX-f	Z4
8001-4951-02	N-m / TNX-f	Z8
8001-4961-02	TNX-f / N-f	Z7
8001-4990-02	TNX-f / 7mm, CC with 4 slots	Z6
8001-4991-02	TNX-f / 3.5mm-m	Z5
8001-4992-02	TNX-f / 3.5mm-f	Z5
8001-4996-02	TNX-f / 7mm; center contact with 6 Slots	Z6
8001-5151-02	N-m / N-m	K15
8001-5161-02	N-m / N-f	K9
8001-5168-02	N-m / HN-f	J4
8001-5169-02	N-m / HN-m	J4
8001-516F-02	N-m / N-f Metric	AA8
8001-5171-02	N-m / BNC-m	K29
8001-5175-02	N-m / 7/16-m	F5
8001-5176-02	N-m / 7/16-f	F5
8001-5179-02	N-m / SC-f	N7
8001-5180-02	N-m / SC-m	N9
8001-5181-02	N-m / BNC-f	K28
8001-5188-02	N-m / C-m	I4
8001-5189-02	N-m / C-f	I4
8001-5961-02	N-f / N-f, BFJ	K5
8001-5M51-02	N-m Metric / N-m	AA8
8001-5M61-02	N-m Metric / N-f	AA8
8001-5M92-02	N-m Metric / 3.5mm-f	AA9
8001-6061-02	N-f / N-f, 4-hole flange	K6
8001-6062-02	N-f / N-f, 4-hole flange	K7
8001-6161-02	N-f / N-f	K4
8001-6168-02	N-f / HN-f	J4
8001-6169-02	N-f / HN-m	J4
8001-6171-02	N-f / BNC-m	K28
8001-6175-02	N-f / 7/16-m	F5
8001-6176-02	N-f / 7/16-f	F5
8001-6179-02	N-f / SC-f	N7
8001-6180-02	N-f / SC-m	N8
8001-6181-02	N-f / BNC-f	K29
8001-6188-02	N-f / C-m	I4

Dimensions shown are Inches over Millimeters or vice versa. Standard units have stainless finish (last 2 digits of the P/N are -02). Interfaces are per DIN 47 223, DIN 47 226, IEC 169-4, IEC 169-7, IEC 169-8, IEC 457-2, IEC 60169-5, IEEE 287, MIL-PRF-39012, MIL DTL-24044, MIL DTL-3643,MIL-STD-348B, where applicable

Spectrum Elektrotechnik GmbH
Germany
www.spectrum-et.com
sales@spectrum-et.com
Phone: +49 / 89 / 35 48 04 0
Fax: +49 / 89 / 35 48 04 90

Spectrum Elektrotechnik GmbH

Adapters Part Number Index

Part Number	Description	Page
8001-6189-02	N-f / C-f	I4
8001-6F61-02	N-f Metric / N-f	AA9
8001-7171-02	BNC-m / BNC-m	H5
8001-7181-02	BNC-m / BNC-f	H4
8001-7575-02	7/16-m / 7/16-m	F4
8001-7576-02	7/16-m / 7/16-f	F4
8001-7676-02	7/16-f / 7/16-f	F4
8001-7979-02	SC-f / SC-f	N4
8001-7980-02	SC-f / SC-m	N4
8001-7990-02	SC-f / 7mm; center contact with 4 slots	E11
8001-7996-02	SC-f / 7mm; center contact with 6 Slots	E11
8001-7B61-02	7/16-m-Push-On-BFJ / N-f	DD12
8001-7N61-02	7/16-m-Push-On / N-f	DD12
8001-7N76-02	7/16-m-Push-On / 7/16-f, non locking	DD10
8001-7N76-13	7/16-m-Push-On / 7/16-f, non locking	DD10
8001-7P7S-02	N-f-4 Hole Flange / TNC-f, 75 Ohms	GG3
8001-7P8N-02	N-m-Push-On / N-f, 75 Ohms	GG2
8001-7R61-02	7/16-m-Push-On / N-f	DD11
8001-7R61-13	7/16-m-Push-On / N-f	DD11
8001-7R76-02	7/16-m-Push-On / 7/16-f	DD9
8001-7R76-13	7/16-m-Push-On / 7/16-f	DD9
8001-7S61-02	7/16-m-Push-On / N-f	DD11
8001-7S61-13	7/16-m-Push-On / N-f	DD11
8001-7S76-02	7/16-m-Push-On / 7/16-f	DD9
8001-7S76-13	7/16-m-Push-On / 7/16-f	DD9
8001-8080-02	SC-m / SC-m	N5
8001-8090-02	SC-m / 7mm; center contact with 4 slots	E11
8001-8096-02	SC-m / 7mm ; center contact with 6 Slots	E11
8001-8181-02	BNC-f / BNC-f	H4
8001-8890-02	C-m / 7mm; center contact with 4 slots	E10
8001-8896-02	C-m / 7mm ; center contact with 6 Slots	E10
8001-8990-02	C-f / 7mm; center contact with 4 slots	E10
8001-8996-02	C-f / 7mm ; center contact with 6 Slots	E10
8001-9090-02	7mm, CC with 4 slots / 7mm, CC with 4 slots;	E4
8001-9090-03	7mm, CC with 4 slots / 7mm, CC with 4 slots;	E4
8001-9091-02	7mm, CC with 4 slots / 3.5mm-m	E9
8001-9092-02	7mm, CC with 4 slots / 3.5mm-f	E8
8001-9094-02	7mm, CC with 4 slots / SCC	O5
8001-9099-02	7mm, CC with 4 slots / TNC-Special	O6
8001-9191-02	3.5mm-m / 3.5mm-m	D6
8001-9192-02	3.5mm-m / 3.5mm-f	D6
8001-9292-02	3.5mm-f / 3.5mm-f	D4
8001-9296-02	3.5mm-f / 7mm; center contact with 6 Slots	E8
8001-9696-02	7mm, CC with 6 slots / 7mm, CC with 6 slots	E4
8001-9696-03	7mm, CC with 6 slots, / 7mm, CC with 6 slots	E4
8001-9F91-02	3.5mm-m / 3.5mm-f Metric	AA4
8001-9F92-02	3.5mm-f Metric / 3.5mm-f	AA4
8001-9M91-02	3.5mm-m Metric / 3.5mm-m	AA4

Part Number	Description	Page
8001-9M92-02	3.5mm-m Metric / 3.5mm-f	AA4
8001-A17B-05	1.6 / 5.6-m / BNC 75 Ohm-m	GG3
8001-A27B-05	1.6 / 5.6-f / BNC 75 Ohm-m	GG3
8001-BM11-02	BMA-m / SMA-m	G9
8001-BM21-02	BMA-m / SMA-f	G8
8001-BM51-02	BMA-m / N-m	G5
8001-BM61-02	BMA-m / N-f	G6
8001-BW11-02	BMA-f / SMA-m	G8
8001-BW21-02	BMA-f / SMA-f	G7
8001-BW51-02	BMA-f / N-m	G5
8001-BW61-02	BMA-f / N-f	G5
8001-CC61-02	SCC-m / N-f	O5
8001-F290-02	2 / 5.5 / 7mm; center contact with 4 slots	FF12
8001-F296-02	2 / 5.5 / 7mm; center contact with 6 Slots	FF12
8001-FN61-02	N-m-Push-On / N-f , floating	DD18
8001-FP4B-02	F-m-Push-On / TNC-f-75 Ohms	DD48
8001-H231-S1	2.4mm-f-NMD / TNC-m	O8
8001-H251-02	N-m / 2.4mm-f-NMD	CC6
8001-H261-02	N-f / 2.4mm-f-NMD	CC6
8001-H290-02	7mm, CC with 4 slots / 2.4mm-f-NMD	CC5
8001-H291-02	3.5mm-m / 2.4mm-f-NMD	CC4
8001-H292-02	3.5mm-f / 2.4mm-f-NMD	CC5
8001-H296-02	7mm, CC with 4 slots / 2.4mm-f-NMD	CC5
8001-H2HD-02	2.4mm-f-NMD / 2.4mm-m NMD	CC3
8001-H2KD-02	2.4mm-f-NMD / 2.92mm-m NMD	CC4
8001-H2KF-02	2.4mm-f-NMD / 2.92mm-f	CC4
8001-H2KM-02	2.4mm-f-NMD / 2.92mm-m	CC4
8001-H2KM-S1	2.4mm-f-NMD / 2.92mm-m	O8
8001-H351-02	3.5mm-f-NMD / N-m	CC13
8001-H361-02	3.5mm-f-NMD / N-f	CC12
8001-H390-02	7mm, CC with 4 slots / 3.5mm-f-NMD	CC12
8001-H391-02	3.5mm-f-NMD / 3.5mm-m	CC11
8001-H392-02	3.5mm-f-NMD / 3.5mm-f	CC11
8001-H396-02	7mm, CC with 4 slots / 3.5mm-f-NMD	CC12
8001-H39D-02	3.5mm-f-NMD / 3.5mm-m-NMD	CC11
8001-H3KF-02	2.92mm-f / 3.5mm-f-NMD	CC10
8001-H3KM-02	2.92mm-m / 3.5mm-f-NMD	CC10
8001-H3M5-02	3.5mm-m-NMD / N-m	CC13
8001-HDWI-02	2.4mm-m-NMD / 2.92mm-f-NMD	CC7
8001-HF31-S1	2.4mm-f / TNC-m	X20
8001-HF51-02	2.4mm-f / N-m	K21
8001-HF61-02	2.4mm-f / N-f	K20
8001-HF90-02	7mm, CC with 4 slots / 2.4mm-f	E5
8001-HF91-02	2.4mm-f / 3.5mm-m	D12
8001-HF92-02	2.4mm-f / 3.5mm-f	D10
8001-HF96-02	2.4mm-f / 7mm ; center contact with 6 Slots	E5
8001-HFAJ-02	2.4mm-f / SMPM-m Smooth Bore	U7
8001-HFH2-02	2.4mm-f / 2.4mm-f-NMD	CC3
8001-HFH3-02	2.4mm-f / 3.5mm-f-NMD	CC10

Dimensions shown are Inches over Millimeters or vice versa. Standard units have stainless finish (last 2 digits of the P/N are -02). Interfaces are per DIN 47 223, DIN 47 226, IEC 169-4, IEC 169-7, IEC 169-8, IEC 457-2, IEC 60169-5, IEEE 287, MIL-PRF-39012, MIL DTL-24044, MIL DTL-3643,MIL-STD-348B, where applicable

Spectrum Elektrotechnik GmbH
Germany
www.spectrum-et.com
sales@spectrum-et.com
Phone: +49 / 89 / 35 48 04 0
Fax: +49 / 89 / 35 48 04 90

Part Number	Description	Page
8001-HFHF-02	2.4mm-f / 2.4mm-f	B4
8001-HFHM-02	2.4mm-f / 2.4mm-m	B5
8001-HFKF-02	2.4mm-f / 2.92mm-f	C18
8001-HFKM-02	2.4mm-f / 2.92mm-m	C19
8001-HFKM-S1	2.4mm-f / 2.92mm-m	C20
8001-HFND-02	2.4mm-f / N-m-NMD	CC14
8001-HFTB-02	2.4mm-f / SMP-m Test-Connector	S10
8001-HFTC-02	2.4mm-f / SMP-m	S11
8001-HFTD-02	2.4mm-f / SMP-m Test-Connector	S11
8001-HFTJ-02	2.4mm-f / SMP-m Precision	S11
8001-HFTL-02	2.4mm-f / SMP-f	S10
8001-HFTP-02	2.4mm-f / SMP-f	S10
8001-HFVF-02	2.4mm-f / 1,85mm-f	B10
8001-HFVM-02	2.4mm-f / 1,85mm-m	B10
8001-HFWI-02	2.92mm-f-NMD / 2.4mm-f	CC7
8001-HM41-S1	2.4mm-m / TNC-f	X20
8001-HM51-02	2.4mm-m / N-m	K21
8001-HM61-02	2.4mm-m / N-f	K20
8001-HM90-02	7mm, center contact with 4 Slots / 2.4mm-m	E5
8001-HM91-02	2.4mm-m / 3.5mm-m	D13
8001-HM92-02	2.4mm-m / 3.5mm-f	D11
8001-HM96-02	2.4mm-m / 7mm; center contact with 6 Slots	E5
8001-HMH2-02	2.4mm-m / 2.4mm-f-NMD	CC3
8001-HMH3-02	2.4mm-m / 3.5mm-f-NMD	CC10
8001-HMHM-02	2.4mm-m / 2.4mm-m	B7
8001-HMKF-02	2.4mm-m / 2.92mm-f	C22
8001-HMKF-S1	2.4mm-m / 2.92mm-f	C22
8001-HMKM-02	2.4mm-m / 2.92mm-m	C21
8001-HMVF-02	2.4mm-m / 1,85mm-f	B10
8001-HMVM-02	2.4mm-m / 1,85mm-m	B10
8001-HMWI-02	2.92mm-f-NMD / 2.4mm-m	CC7
8001-KF51-02	2.92mm-f / N-m	K22
8001-KF61-02	2.92mm-f / N-f	K22
8001-KF90-02	7mm, center contact with 4 Slots/ 2.92mm-f	E6
8001-KF91-02	2.92mm-f / 3.5mm-m	D17
8001-KF92-02	2.92mm-f / 3.5mm-f	D16
8001-KF96-02	2.92mm-f / 7mm; center contact with 6 Slots	E6
8001-KFKF-02	2.92mm-f / 2.92mm-f	C4
8001-KFKM-02	2.92mm-f / 2.92mm-m	C9
8001-KFMJ-02	2.92mm-f / SMP-m, Full Detent	R13
8001-KFMP-02	2.92mm-f / SMP-f	R12
8001-KFQF-42	2.92mm / SMPM-f	U8 & II11
8001-KFQM-02	2.92mm female / SMPM-m, smooth bore	II11
8001-KFS6-02	2.92mm female / size16 female	II11
8001-KFS7-02	2.92mm female / size16 female	II11
8001-KFSX-02	2.92mm female / SSMA-m	V4
8001-KFVF-02	2.92mm female / 1.85mm-f	C16

Part Number	Description	Page
8001-KFVM-02	2.92mm female / 1.85mm-m	C16
8001-KFWI-02	2.92mm-f-NMD / 2.92mm-f	CC7
8001-KM51-02	2.92mm-m / N-m	K23
8001-KM61-02	2.92mm-m / N-f	K22
8001-KM90-02	7mm, 4 slotted contact / 2.92mm-m	E6
8001-KM91-02	2.92mm-m / 3.5mm-m	D18
8001-KM92-02	2.92mm-m / 3.5mm-f	D17
8001-KM96-02	2.92mm-m / 7mm; 6 slotted contact	E6
8001-KMKM-02	2.92mm-m / 2.92mm-m	C13
8001-KMMJ-02	2.92mm-m / SMP-m Full Detent	R14
8001-KMMP-02	2.92mm-m / SMP-f	R12
8001-KMSY-02	SSMA-f / 2.92mm-m	V4
8001-KMVF-02	1.85mm-f / 2.92mm-m	C16
8001-KMVM-02	1.85mm-m / 2.92mm-m	C17
8001-KMWI-02	2.92mm-f-NMD / 2.92mm-m	CC8
8001-MFMM-02	SMP-m Full Detent / SMP-m Catcher's Mitt	R10
8001-MJ11-02	SMP-m Limited Detent / SMA-m	R21
8001-MJ21-02	SMA-f / SMP-m Limited Detent	R18
8001-MJ90-02	7mm / SMP-m Full Detent	R15
8001-MJ91-04	3.5mm-m / SMP-f	S23
8001-MJ96-02	7mm, 6 slotted CC / SMP-m Full Detent	R15
8001-MJMJ-02	SMP-m / SMP-m	S7
8001-MJMP-02	SMP-f / SMP-m	S7
8001-MP11-00	SMP-f / SMA-m	R17
8001-MP11-04	SMP-f / SMA-m	R17
8001-MP21-04	SMP-f / SMA-f	R16
8001-MP90-02	7mm, 4 slotted contact / SMP-f	R15
8001-MP91-02	SMP-f / 3.5mm-f	S23
8001-MP96-02	7mm, 6 slotted contact / SMP-f Full Detent	R15
8001-MPMP-04	SMP-f / SMP-f	R4
8001-ND51-02	N-m NMD / N-m	CC15
8001-ND92-02	N-m NMD / 3.5mm-f	CC14
8001-NL21-02	N-m-Push-On / SMA-f	DD25
8001-NL41-02	N-m-Push-On / TNC-f	DD22
8001-NN21-02	N-m-Push-On / SMA-f, Non Locking	DD25
8001-NN41-02	N-m-Push-On / TNC-f, Non Locking	DD23
8001-NN61-02	N-m-Push-On / N-f, Non Locking	DD17
8001-NS21-02	N-m-Push-On / SMA-f	DD24
8001-NS41-02	N-m-Push-On / TNC-f	DD22
8001-NS61-02	N-m-Push-On / N-f	DD15
8001-PJ11-02	SPM-f / SMA-m	W5
8001-PJ21-02	SPM-f / SMA-f	W5
8001-PM11-02	SPM-m / SMA-m	W5
8001-PM21-02	SPM-m / SMA-f	W5
8001-QFQF-04	SMPM-f / SMPM-f	U4
8001-QM21-02	SMPM-m Full Detent / SMA-f	U9
8001-QS21-02	TQ-m Insert / SMA-f	II10

Dimensions shown are Inches over Millimeters or vice versa. Standard units have stainless finish (last 2 digits of the P/N are -02). Interfaces are per DIN 47 223, DIN 47 226, IEC 169-4, IEC 169-7, IEC 169-8, IEC 457-2, IEC 60169-5, IEEE 287, MIL-PRF-39012, MIL DTL-24044, MIL DTL-3643,MIL-STD-348B, where applicable

Spectrum Elektrotechnik GmbH
Germany
www.spectrum-et.com
sales@spectrum-et.com
Phone: +49 / 89 / 35 48 04 0
Fax: +49 / 89 / 35 48 04 90

Part Number	Description	Page
8001-QT21-02	TQ- / TX- Insert-fem. / SMA-f	II10
8001-RF21-02	SMA-f-Push-On Reverse Sex / SMA-f	DD47
8001-RM21-02	SMA-m Reverse Sex/ SMA-f	DD46
8001-S003-02	TNC-m / TNC-f	X9
8001-S004-02	2.92mm-f / 2.92mm-m Reverse Sex	1C4
8001-S005-02	2.92mm-m / 2.92mm-f, Reverse Sex	1C4
8001-S006-02	7mm, 4 slotted contact / TNC Special Conn.	O6
8001-S007-02	TWT-Connector / 2.92mm-f	O8
8001-S008-02	SPM-female 90° mitred Angle / SMA-f	W6
8001-S009-02	SMA-f / BNC-m Special Connector	O6
8001-S010-02	SPM-female 90° mitred Angle / SMA-f	W6
8001-S011-02	SCC-f / N-m	O4
8001-S012-02	SCC-m / SMA-f	O7
8001-SF21-02	SMA-f-Push-On / SMA-f	DD44
8001-SM11-02	SMA-m-Push-On / SMA-m	DD44
8001-SM21-02	SMA-m-Push-On / SMA-f	DD41
8001-SX11-02	SSMA-m / SMA-m	V5
8001-SX21-02	SSMA-m / SMA-f	V5
8001-TL21-02	TNC-m-Push-On / SMA-f	DD35
8001-TL41-02	TNC-m-Push-On / TNC-f	DD27
8001-TL61-02	TNC-m-Push-On / N-f	DD31
8001-TLTL-02	SMP-f / SMP-f; Limited Detent	S6
8001-TN21-02	TNC-m-Push-On / SMA-f , Non Locking	DD37
8001-TN41-02	TNC-m-Push-On / TNC-f , Non Locking	DD29
8001-TN61-02	TNC-m-Push-On / N-f , Non Locking	DD33
8001-TS21-02	TNC-m-Push-On / SMA-f	DD34
8001-TS41-02	TNC-m-Push-On / TNC-f	DD27
8001-TS61-02	TNC-m-Push-On / N-f	DD31
8001-V2VD-02	1.85mm-f NMD / 1.85mm-m NMD	CC2
8001-V2VF-02	1.85mm-f NMD / 1.85mm-f	CC2
8001-VFVF-02	1.85mm-f / 1.85mm-f	A5
8001-VFVM-02	1.85mm-f / 1.85mm-m	A5
8001-VMVM-02	1.85mm-m / 1.85mm-m	A6
8001-WI51-02	2.92mm-f-NMD / N-m	CC9
8001-WI61-02	2.92mm-f-NMD / N-f	CC9
8001-WI90-02	7mm, 4 slotted contact / 2.92mm-f-NMD	CC9
8001-WI91-02	3.5mm-m / 2.92mm-f-NMD	CC8
8001-WI92-02	3.5mm-f / 2.92mm-f-NMD	CC8
8001-XF11-02	SBX-f / SMA-m	L7
8001-XF21-02	SBX-f / SMA-f	L7
8001-XF51-02	SBX-f / N-m	L5
8001-XF61-02	SBX-f / N-f	L5
8001-XF75-02	SBX-f / 7/16-m	L4
8001-XF76-02	SBX-f / 7/16-f	L4
8001-XM11-02	SBX-m / SMA-m	L8
8001-XM21-02	SBX-m / SMA-f	L8
8001-XM51-02	N-m / SBX-m	L6
8001-XM61-02	N-f / SBX-m	L6
8001-XM75-02	SBX-m / 7/16-m	L5

Part Number	Description	Page
8001-XMNN-02	SBX-m / N-m	L6
8001-XMS1-02	SBX-m / special customer design	L7
8001-XSKF-02	TX male Insert / 2.92mm female	II10
8001-XTKF-02	TX female Insert / 2.92mm female	II10
8001-YF11-02	SBY-f / SMA-m	M7
8001-YF21-02	SBY-f / SMA-f	M7
8001-YF51-02	N-m / SBY-f	M5
8001-YF61-02	N-f / SBY-f	M5
8001-YF75-02	7/16-m / SBY-f	M4
8001-YF76-02	7/16-f / SBY-f	M4
8001-YM11-02	SBY-m / SMA-m	M7
8001-YM21-02	SBY-m / SMA-f	M7
8001-YM51-02	N-m / SBY-m	M6
8001-YM61-02	N-f / SBY-m	M5
8001-YM75-02	7/16-m / SMY-m	M4
8001-YM76-02	7/16-f / SBY-m	M4
8001-Z15E-13	13 / 30-f / 1 5 / 8 EIA	FF16
8001-Z1Z1-13	13/30-f / 13/30-f	FF24
8001-ZF61-02	SBZ-f / N-f	O7
8001-ZM61-02	SBZ-m / N-f	O8
8002-0351-02	1.4 / 4.4 / N-m	FF5
8002-0361-02	1.4 / 4.4 / N-f	FF4
8002-1121-02	SMA-m / SMA-f	P8
8002-1151-02	SMA-m / N-m	K38
8002-1161-02	SMA-m / N-f, 4-hole flange	K33
8002-1190-02	SMA-m / 7mm; 4-hole flange, 6 slotted contact	E15
8002-1196-02	SMA-m / 7mm; 6 slotted contact	E15
8002-2121-00	SMA-f / SMA-f; BFJ	P5
8002-2121-02	SMA-f / SMA-f; BFJ	P5
8002-2131-02	SMA-f / TNC-m	X30
8002-2141-02	SMA-f / TNC-f	X26
8002-2151-02	SMA-f / N-m	K35
8002-2161-02	SMA-f / N-f; 4-hole flange	K30
8002-216F-02	SMA-f / N-f; BFJ; Metric	AA10
8002-2190-02	SMA-f / 7mm, 4 slotted contact; 4-hole flange	E14
8002-2196-02	SMA-f / 7mm; 6 slotted contact	E14
8002-3141-02	TNC-m / TNC-f	X10
8002-3190-02	TNC-m / 7mm; 4 slotted contact	E16
8002-3196-02	TNC-m / 7mm; 6 slotted contact	E16
8002-4141-02	TNC-f / TNC-f	X6
8002-4151-02	TNC-f / N-m	K45
8002-4190-02	7mm. 4 slotted contact / TNC-f	E16
8002-4196-02	TNC-f / 7mm; 6 slotted contact	E16
8002-4199-13	TNC-f / Custom Connector	O7
8002-4961-02	TNX-f / N-f	Z7
8002-5151-02	N-m / N-m	K15
8002-5190-02	N-m / 7mm; center contact with 4 slots	E12
8002-5191-02	N-m / 3.5mm-m	K26

Dimensions shown are Inches over Millimeters or vice versa. Standard units have stainless finish (last 2 digits of the P/N are -02). Interfaces are per DIN 47 223, DIN 47 226, IEC 169-4, IEC 169-7, IEC 169-8, IEC 457-2, IEC 60169-5, IEEE 287, MIL-PRF-39012, MIL DTL-24044, MIL DTL-3643,MIL-STD-348B, where applicable

Spectrum Elektrotechnik GmbH
Germany
www.spectrum-et.com
sales@spectrum-et.com
Phone: +49 / 89 / 35 48 04 0
Fax: +49 / 89 / 35 48 04 90

Spectrum Elektrotechnik GmbH

Part Number	Description	Page
8002-5192-02	N-m / 3.5mm-f	K26
8002-5196-02	N-m / 7mm; center contact with 6 Slots	E12
8002-6061-02	N-f / N-f; BFJ	K5
8002-6161-02	N-f / N-f; BFJ	K4
8002-6190-02	N-f / 7mm; center contact with 4 slots	E12
8002-6191-02	N-f / 3.5mm-m	K25
8002-6192-02	N-f / 3.5mm-f	K24
8002-6F61-02	N-f / N-f; Metric BFJ	AA9
8002-7676-02	7/16-f / 7/16-f BFJ	F4
8002-7979-02	SC-f / SC-f; BFJ, using Silicone gasket	N4
8002-8181-02	BNC-f / BNC-f; BFJ	H4
8002-9091-02	7mm, 4 slotted CC / 3.5mm-m; 4-hole flange	E9
8002-9092-02	7mm, 4 slotted CC / 3.5mm-f; 4-hole flange	E8
8002-9191-02	3.5mm-m / 3.5mm-m	D6
8002-9192-02	3.5mm-m / 3.5mm-f	D6
8002-9292-02	3.5mm-f / 3.5mm-f	D4
8002-9296-02	3.5mm-f / 7mm; center contact with 6 Slots	E8
8002-BM21-02	BMA-m / SMA-f, BFJ	G8
8002-BW21-02	BMA-f / SMA-f, 2-Hole Flange	G7
8002-CC61-U2	SCC-m / N-f	O5
8002-FP4B-02	F-m-Push-On / TNC-f-75 Ohms	DD48
8002-H391-02	3.5mm-f NMD / 3.5mm-m	CC12
8002-H392-02	3.5mm-f / 3.5mm-f-NMD	CC11
8002-HF92-02	2.4mm-f / 3.5mm-f	D10
8002-HF9F-02	2.4mm-f / 3.5mm-f, Metric	AA5
8002-HFHF-02	2.4mm-f / 2.4mm-f	B4
8002-HM91-02	2.4mm-m / 3.5mm-m	D13
8002-HM92-02	2.4mm-m / 3.5mm-f	D11
8002-KF91-02	2.92mm-f / 3.5mm-m	D18
8002-KFKF-02	2.92mm-f / 2.92mm-f,4-hole flange	C5
8002-KFKP-02	2.92mm-f / 2.92mm-m, NMD	CC8
8002-KFMJ-02	2.92mm-f / SMP-m, limited Detent	R13
8002-KFMP-02	2.92mm-f / SMP-f	S15
8002-KFTP-02	2.92mm-f / SMP-f	S15
8002-KM91-02	2.92mm-m / 3.5mm-m	D18
8002-KMMJ-02	2.92mm-m / SMP-m limited Detent	R14
8002-MJ11-02	SMP-m Smooth Bore / SMA-m	R21
8002-MJ21-02	SMP-m Smooth Bore / SMA-f	R19
8002-MJ90-02	7mm, 4 slotted CC / SMP-m limited Detent	R15
8002-MJ96-02	7mm, 6 slotted CC / SMP-m, Lim. Detent	R15
8002-MJMJ-02	SMP-m , full Detent / SMP-m Catcher's Mitt	R10
8002-MJMP-04	SMP-f / SMP-m Full Detent	R8
8002-MP11-02	SMP-f / SMA-m	R17
8002-MP21-02	SMP-f / SMA-f , 2-hole flange	R16
8002-MPMP-02	SMP-f / SMP-f	S6
8002-NL61-02	N-m-Push-On / N-f	DD16
8002-NL61-13	N-m-Push-On / N-f	DD16
8002-NN61-02	N-m-Push-On / N-f, Non Locking	DD17

Part Number	Description	Page
8002-NS61-02	N-m-Push-On / N-f	DD15
8002-NS61-13	N-m-Push-On / N-f	DD15
8002-QF21-02	SMPM-f / SMA-f	U9
8002-QFQF-04	SM PM-f / SMPM-f	U4
8002-SF21-02	SMA-f-Push-On / SMA-f	DD44
8002-TN41-02	TNC-m-Push-On / TNC-f , Non Locking	DD28
8002-TPTP-02	SMP-f / SMP-f; Full Detent	S6
8002-TS21-02	TNC-m-Push-On / SMA-f	DD35
8002-VFVF-02	1.85mm-f / 1.85mm-f; 4-hole flange	A5
8002-XF21-02	SBX-f / SMA-f	L7
8002-XF61-02	SBX-f / N-f	L5
8002-XM61-02	N-f / SBX-m	L6
8002-XM76-02	SBX-m / 7/16-f	L4
8002-YF61-02	N-f / SBY-f	M5
8002-YM61-02	N-f / SBY-m; 4-hole flange	M6
8003-1121-02	SMA-m / SMA-f; BFJ	P8
8003-1161-02	SMA-m / N-f, 4-hole flange	K33
8003-2131-02	SMA-f / TNC-m	X29
8003-2141-00	SMA-f / TNC-f	X25
8003-2142-02	SMA-f / TNC-f; 4-hole flange	X26
8003-2151-02	SMA-f / N-m, 4-hole flange	K36
8003-2161-02	SMA-f / N-f; BFJ	K31
8003-2181-02	SMA-f / BNC-f, 4-hole flange	P14
8003-3141-02	TNC-f / TNC-m	X10
8003-3190-02	TNC-m / 7mm; center contact with 4 slots	E17
8003-3196-02	TNC-m / 7mm; center contact with 6 slots	E17
8003-4141-02	TNC-f / TNC-f, 4-hole flange	X6
8003-4151-02	TNC-f / N-m	K45
8003-5151-02	N-m / N-m, 4-hole flange	K15
8003-5161-02	N-m / N-f	K9
8003-6191-02	N-f / 3.5mm-m; 4-hole flange	K25
8003-6192-02	N-f / 3.5mm-f; 4-hole flange	K24
8003-7979-02	SC-f / SC-f; BFJ, using EMI gasket	N4
8003-8181-02	BNC-f / BNC-f; 4-hole flange	H4
8003-9091-02	7mm, 4 slotted CC / 3.5mm-m	E9
8003-9092-02	7mm, 4 slotted CC / 3.5mm-f	E9
8003-9192-02	3.5mm-m / 3.5mm-f, 2-Hole Flange	D6
8003-9196-02	3.5mm-m / 7mm; center contact with 6 Slots	E9
8003-9292-02	3.5mm-f / 3.5mm-f, BFJ	D4
8003-9296-02	3.5mm-f / 7mm; center contact with 6 Slots	E9
8003-BW21-02	BMA-f / SMA-f, BFJ	G7
8003-HFHF-02	2.4mm-f / 2.4mm-f, 4-hole flange	B4
8003-KFKF-00	2.92mm-f / 2.92mm-f; BFJ	C6
8003-KFKF-02	2.92mm-f / 2.92mm-f; BFJ	C5
8003-KFKM-02	2.92mm-f / 2.92mm-m	C11
8003-KFMJ-02	2.92mm-f / SMP-m, Smooth Bore	R13
8003-KFMP-02	2.92mm-f / SMP-f	S15
8003-KMMJ-02	2.92mm-m / SMP-m Smooth Bore	R14
8003-KMMP-02	2.92mm-m / SMP-f	S18

Dimensions shown are Inches over Millimeters or vice versa. Standard units have stainless finish (last 2 digits of the P/N are -02). Interfaces are per DIN 47 223, DIN 47 226, IEC 169-4, IEC 169-7, IEC 169-8, IEC 457-2, IEC 60169-5, IEEE 287, MIL-PRF-39012, MIL DTL-24044, MIL DTL-3643,MIL-STD-348B, where applicable

Spectrum Elektrotechnik GmbH
Germany
www.spectrum-et.com
sales@spectrum-et.com
Phone: +49 / 89 / 35 48 04 0
Fax: +49 / 89 / 35 48 04 90

Spectrum Elektrotechnik GmbH

Part Number	Description	Page
8003-MJ11-02	SMP-m Full Detent / SMA-m	R20
8003-MJ21-02	SMP-m Full Detent / SMA-f	R18
8003-MJ90-02	7mm, 4 slotted CC / SMP-m Smooth Bore	R15
8003-MJ96-02	7mm, 6-Slotted CC / SMP-m; Smooth Bore	R15
8003-MJMJ-02	SMP-m, Catcher's Mitt / SMP-m; Full Detent	R11
8003-MJMP-04	SMP-f / SMP-m; Limited Detent	R8
8003-MP21-04	SMP-f / SMA-f	R16
8003-MPMP-04	SMP-f / SMP-f	R4
8003-NL61-02	N-m-Push-On-Double-D / N-f	DD20
8003-NL61-13	N-m-Push-On-Double-D / N-f	DD20
8003-NS21-02	N-m-Push-On-Double-D / SMA-f	DD24
8003-NS61-02	N-m-Push-On-Double-D / N-f	DD19
8003-NS61-13	N-m-Push-On-Double-D / N-f	DD19
8003-RM21-02	SMA-m-Push-On / SMA-f; Reverse Sex	Q4
8003-SM21-02	SMA-m-Push-On / SMA-f	DD41
8003-SM99-02	SMA-m-Push-On / SMA-f; Reverse Sex	DD46
8003-VFVF-02	1.85mm-f / 1.85mm; BFJ	A5
8003-XM76-02	SBX-m / 7/16-f , 4-hole flange	L4
8004-1121-02	SMA-m / SMA-f; 4-hole flange	P8
8004-1161-02	SMA-m / N-f	K34
8004-2121-02	SMA-f / SMA-f; 4-hole flange	P5
8004-2141-02	SMA-f / TNC-f, 4-hole flange	X26
8004-2151-02	SMA-f / N-m; 4-hole flange with gasket	K36
8004-2161-02	SMA-f / N-f, 4-hole flange	K31
8004-3141-02	TNC-m / TNC-f: long	X11
8004-4141-02	TNC-f / TNC-f; BFJ	X7
8004-4151-02	N-male / TNC-f; BFJ	K45
8004-6061-02	N-f / N-f 4-hole flange	K7
8004-BW21-02	BMA-f / SMA-BFJ	G7
8004-HFHF-02	2.4mm-f / 2.4mm-f, BFJ	B5
8004-KFKF-02	2.92mm-f / 2.9mm-f; 4-hole flange	C7
8004-KFKM-02	2.92mm-f / 2.92mm-m, 4-hole flange	C12
8004-KFMJ-02	2.92mm-f / SMP-m, Catcher's Mitt	R13
8004-KFMP-02	2.92mm-f / SMP-f	S15
8004-KMMJ-02	2.92mm-m / SMP-m, Catcher's Mitt	R14
8004-MJ11-02	SMP-m Limited Detent / SMA-m	R20
8004-MJ21-02	SMP-m limited Detent / SMA-f	R19
8004-MJMJ-02	SMP-m Ctacher's Mitt/SMP-m Límited Detent	R11
8004-MJMP-04	SMP-f / SMP-m, Smooth Bore Bore	R8
8004-MP21-02	SMP-f / SMA-f BFJ	R16
8004-MPMP-04	SMP-f / SMP-f	R4
8004-RM21-02	SMA-m-Push-On Rev.Sex/SMA-f;,2-hole flge.	DD46
8004-SM21-02	SMA-m-Push-On / SMA-f; 2-hole flange	DD41
8005-1161-02	SMA-m / N-f; BFJ	K34
8005-2121-02	SMA-f / SMA-f	P4
8005-2141-02	SMA-f / TNC-f; 4-hole flange	X27
8005-2151-02	SMA-f / N-m	K37
8005-2161-02	SMA-f / N-f	K30

Part Number	Description	Page
8005-3141-S1	TNC-m / TNC-f 90° mitred Angle	X15
8005-4141-02	TNC-f / TNC-f; 4-hole flange	X7
8005-BW21-02	BMA-f / SMA-f; 4-hole flange	G8
8005-KFKF-02	2.92mm-f / 2.9mm-f; 4-hole flange	C7
8005-KMMJ-02	2.92mm-m / SMP-m, Smooth Bore	S16
8005-MJ11-02	SMP-m ; Smooth Bore / SMA-m	R20
8005-MJ21-02	SMP-m, full Detent / SMA-f	R21
8005-MJMJ-02	SMP-m, Catcher's Mitt / SMP-m,Smooth Bore	R11
8005-MJMP-04	SMP-f / SMP-m Catcher's Mitt	R9
8005-MPMP-04	SMP-f / SMP-f	R4
8005-NS61-02	N-m-Push-On, N-BFJ; float mount	DD18
8005-NS61-05	N-m-Push-On, N-BFJ; float mount	DD18
8005-RM21-02	SMA-m / SMA-f Reverse Sex	DD47
8005-SM21-02	SMA-m-Push-On / SMA-f	DD41
8006-2161-02	SMA-f / N-f, 4-hole flange	K32
8006-4141-02	TNC-f / TNC-f; BFJ	X9
8006-KFKF-02	2.92mm-f / 2.92mm-f, 4-hole flange	C8
8006-KMMJ-02	2.92mm-m / SMP-m, Smooth Bore	S17
8006-MJ11-02	SMP-m Full Detent / SMA-m	R21
8006-MJ21-02	SMP-m Smooth Bore / SMA-f	R18
8006-MJMP-04	SMP-f / SMP-m Full Detent	R9
8006-RM21-02	SMA-m / SMA-f, Reverse Sex	DD47
8006-SM21-02	SMA-m-Push-On / SMA-f locking	DD42
8007-2121-02	SMA-f / SMA-f	P4
8007-2141-02	SMA-f / TNC-f 4-Hole Flange	X27
8007-KFKM-02	2.92mm-f / 2.92mm-m	C12
8007-KFMJ-02	2.92mm-f / SMP-m, Smooth Bore	S16
8007-KMMJ-02	2.92mm-m / SMP-m, Smooth Bore	S17
8007-MJ21-02	SMP-m Full Detent / SMA-f	R19
8007-MJMP-04	SMP-f / SMP-m Limited Detent	R9
8007-MPMP-04	SMP-f / SMP-f; bullet, spring loaded	R5
8007-SM21-02	SMA-m-Push-On / SMA-f	DD42
8008-2121-02	SMA-f / SMA-f	P4
8008-2141-02	SMA-f / TNC-f; 4-hole flange	X27
8008-KMMJ-02	2.92mm-m / SMP-m	S17
8008-MJMP-04	SMP-f / SMP-m Smoothe Bore	R9
8008-MPMP-04	SMP-f / SMP-f	R5
8008-SM21-02	SMA-m-Push-On / SMA-f	DD42
8009-2121-02	SMA-f / SMA-f 4-Hole Flange	P6
8009-2141-02	SMA-f / TNC-f; BFJ	X26
8009-KFMJ-02	2.92mm-f / SMP-m; Test Connector	S16
8009-KMMJ-02	2.92mm-m / SMP-m; Test Connector	S17
8009-MJMP-04	SMP-f / SMP-m, Catcher's Mitt	R10
8009-MPMP-04	SMP-f / SMP-f	R5
8009-SM21-02	SMA-m-Push-On / SMA-f	DD43
800P-KFKF-02	2.92mm-f / 2.92mm-BFJ, pressurized	C7
800R-1121-02	QRE-f Quick Lock / SMA-f	O4
800V-5181-02	N-m / BNC-f, venting holes	K28

Dimensions shown are Inches over Millimeters or vice versa. Standard units have stainless finish (last 2 digits of the P/N are -02). Interfaces are per DIN 47 223, DIN 47 226, IEC 169-4, IEC 169-7, IEC 169-8, IEC 457-2, IEC 60169-5, IEEE 287, MIL-PRF-39012, MIL DTL-24044, MIL DTL-3643,MIL-STD-348B, where applicable

Spectrum Elektrotechnik GmbH
Germany
www.spectrum-et.com
sales@spectrum-et.com
Phone: +49 / 89 / 35 48 04 0
Fax: +49 / 89 / 35 48 04 90

Spectrum Elektrotechnik GmbH

Part Number	Description	Page
800V-5M61-02	N-m Metric / N-f; Venting Holes	AA8
800V-6175-02	N-f / 7/16-m ,Venting Holes	F5
800V-KFKF-U2	2.92mm-f / 2.92mm-f, 4-hole flange, venting	C5
8010-KFMJ-02	2.92mm-f / SMP-m; Test Connector	S16
8010-KMMJ-02	2.92mm-m / SMP-m; Test Connector	S18
8010-MPMP-04	SMP-f / SMP-f	R5
8010-SM21-02	SMA-m Push-On / SMA-f	DD43
8011-2121-02	SMA-f / SMA-f; BFJ	P5
8011-MPMP-04	SMP-f / SMP-f; spring loaded	R6
8012-2121-02	SMA-f / SMA-f, 2-hole flange	P5
8012-MPMP-04	SMP-f / SMP-f; spring loaded	R6
8012-SM21-02	SMA-m Push-On / SMA-f	DD43
8013-MPMP-04	SMP-f / SMP-f; spring loaded	R6
8013-SM21-02	SMA-m Push-On / SMA-f	DD43
8015-MPMP-04	SMP-f / SMP-f; bullet, spring loaded	R7
8016-MPMP-04	SMP-f / SMP-f; bullet, spring loaded	R7
8016-SM21-02	SMA-m Push-On / SMA-f	DD44
8017-MPMP-04	SMP-f / SMP-f	R7
8018-MPMP-04	SMP-f / SMP-f; bullet, spring loaded	R7
801P-4141-02	TNC-f / TNC-f; BFJ	X9
801P-KFKF-02	2.92mm-f / 2.92mm-f, pressurized	C7
801V-1141-02	SMA-m / TNC-f, venting holes	X28
801V-2131-02	SMA-f / TNC-m, venting holes	X29
802P-4141-02	TNC-f / TNC-f; BFJ	X9
802V-KFKF-02	2.92mm-f / 2.92mm-f, 4-hole Flange; venting	C6
802V-KFKF-U2	2.92mm-f / 2.92mm-f, 4-hole Flange; venting	C6
802V-KFVM-02	1.85mm-m / 2.92mm-f; venting holes	C16
8035-1121-05	SMA-m / SMA-f	P9
803P-KFKF-02	2.92mm-f / 2.92mm-f, pressurized	C7
8040-1121-05	SMA-m / SMA-f	P9
8045-1121-05	SMA-m / SMA-f	P9
8045-3141-02	TNC-m / TNC-f 135°(45°) angle	X11
8045-3151-02	TNC-m / N-m 135°(45°) angle	K48
8045-3161-02	TNC-m / N-f 135°(45°) angle	K43
8045-5151-02	N-m / N-m 135° (45°) angle	K17
8045-5161-02	N-m / N-f 135° (45°) angle	K11
8050-1121-05	SMA-m / SMA-f	P9
8050-3131-02	TNC-m / TNC-m, higher power	X16
8050-3151-02	TNC-m / N-m, higher power	K48
8050-3161-02	TNC-m / N-f, higher power	K41
8050-4151-00	TNC-f / N-m higher power	K46
8050-4161-00	TNC-f / N-f, higher power	K40
8050-5151-02	N-m / N-m, higher power	K17
8050-5161-02	N-m / N-f, higher power	K9
8050-6161-02	N-f / N-f, higher power	K4
8051-3161-02	TNC-m / N-f, higher power.	K42
8051-5161-02	N-m / N-f; 4-hole flange, higher power	K10
8051-6180-02	N-f / SC-m	N8

Part Number	Description	Page
8052-3161-02	TNC-m / N-f, higher power.	K42
8052-5161-00	N-m / N-f, 4-hole flange; higher power	K11
8055-1121-05	SMA-m / SMA-f	P9
8058-3161-02	TNC-m / N-f, higher power.	K43
8058-4151-02	TNC-f / N-m, higher power.	K46
8058-5151-02	N-m / N-m, higher power.	K17
8058-5161-02	N-m / N-f, higher power.	K11
8058-6161-02	N-f / N-f, higher power.	K6
8058-TN41-02	TNC-m Push-On / TNC-f, higher power	DD30
8059-3141-02	TNC-f / TNC-m; higher power	X15
805V-3131-00	TNC-m / TNC-m, higher power	X16
805V-3141-00	TNC-f / TNC-m, higher power	X11
805V-3151-00	TNC-m / N-m, higher power	K47
805V-3161-00	TNC-m / N-f, higher power.	K42
805V-4041-03	TNC-f / TNC-f; 4-Hole Flange;higher power	X7
805V-4141-00	TNC-f / TNC-f, higher power	X8
805V-4141-29	TNC-f / TNC-f, higher power	X8
805V-4151-00	TNC-f / N-m higher power	K46
805V-4161-00	TNC-f / N-f, higher power	K40
805V-5151-00	N-m / N-m, higher power	K17
805V-5161-00	N-m / N-f, higher power	K10
805V-6161-00	N-f / N-f, higher power	K6
8060-1121-05	SMA-m / SMA-f	P9
8065-1121-05	SMA-m / SMA-f	P9
8070-1121-05	SMA-m / SMA-f	P9
8075-1121-05	SMA-m / SMA-f	P9
8080-1121-05	SMA-m / SMA-f	P9
8085-1121-05	SMA-m / SMA-f	P9
8090-1111-02	SMA-m / SMA-m; 90° mitred right Angle	P12
8090-1121-02	SMA-m / SMA-f ;90° mitred right Angle	P10
8090-1121-05	SMA-m / SMA-f	P9
8090-2121-02	SMA-f / SMA-f; 90° mitred right Angle	P7
8090-3141-02	TNC-m / TNC-f, 90° Swept Angle	X12
8090-3161-02	TNC-m / N-f; 90°; mitred right Angle	K43
8090-5161-02	N-m / N-f; 90° mitred Angle	K12
8090-9191-02	3.5mm-m / 3.5mm-m; 90°Swept Angle	D8
8090-9192-02	3.5mm-f / 3.5mm-m; 90°Swept Angle	D7
8090-9292-02	3.5mm-f / 3.5mm-f; 90°Swept Angle	D5
8090-HF91-02	2.4mm-f / 3.5mm-m 90° Swept Angle	D13
8090-HF92-02	2.4mm-f / 3.5mm-f 90° Swept Angle	D10
8090-HFHF-02	2.4mm-f / 2.4mm-f 90° Swept Angle	B5
8090-HFHM-02	2.4mm-m / 2.4mm-f 90°90° Swept Angle	B6
8090-HFKF-02	2.4mm-f / 2.92mm-f 90° Swept Angle	C17
8090-HFKM-02	2.4mm-f / 2.92mm-m 90°Swept Angle	C20
8090-HM91-02	2.4mm-m / 3.5mm-m 90° Swept Angle	D14
8090-HM92-02	2.4mm-m / 3.5mm-f 90° Swept Angle	D12
8090-HMHM-02	2.4mm-m / 2.4mm-m 90° Swept Angle	B7
8090-HMKF-02	2.4mm-m / 2.92mm-f 90° Swept Angle	C20
8090-HMKM-02	2.4mm-m / 2.92mm-m 90° Swept Angle	C22

KK

Dimensions shown are Inches over Millimeters or vice versa. Standard units have stainless finish (last 2 digits of the P/N are -02). Interfaces are per DIN 47 223, DIN 47 226, IEC 169-4, IEC 169-7, IEC 169-8, IEC 457-2, IEC 60169-5, IEEE 287, MIL-PRF-39012, MIL DTL-24044, MIL DTL-3643,MIL-STD-348B, where applicable

Spectrum Elektrotechnik GmbH
Germany
www.spectrum-et.com
sales@spectrum-et.com
Phone: +49 / 89 / 35 48 04 0
Fax: +49 / 89 / 35 48 04 90

Spectrum Elektrotechnik GmbH

Part Number	Description	Page
8090-KF91-02	2.92mm-f / 3.5-m 90° swept Angle	D19
8090-KF92-02	2.92mm-f / 3.5-f 90° swept Angle	D16
8090-KFKF-02	2.92mm-f / 2.92mm-f 90° swept Angle	C8
8090-KFKM-02	2.92mm-f / 2.92mm-m 90° swept Angle	C10
8090-KM91-02	2.92mm-m / 3.5-m 90° swept Angle	D19
8090-KM92-02	2.92mm-m / 3.5-f 90° swept Angle	D17
8090-KMKM-02	2.92mm-m / 2.92mm-m 90° swept Angle	C14
8090-ND61-02	N-m / N-f 90° mitred Angle	K13
8090-S001-02	N-m / N-f 90° mitred Angle	K13
8090-S001-07	TNC-f / SP, 90° mitred Angle	X31
8090-S002-07	TNC-f / SP, 90° mitred Angle	X31
8090-VFVF-02	1.85mm-f / 1.85mm-f; 90° swept Angle	A6
8090-VFVM-02	1.85mm-m / 1.85mm-f; 90° swept Angle	A6
8090-VMVM-02	1.85mm-m / 1.85mm-m; 90°swept Angle	A7
8091-1111-00	SMA-m / SMA-m 90° Swept Angle	P13
8091-1111-02	SMA-m / SMA-m 90° Swept Angle	P13
8091-1121-00	SMA-m / SMA-f 90° Swept Angle	P11
8091-1121-02	SMA-m / SMA-f 90° Swept Angle	P11
8091-2121-00	SMA-f / SMA-f 90° Swept Angle	P6
8091-2121-02	SMA-f / SMA-f 90° Swept Angle	P6
8091-3131-02	TNC-m / TNC-m 90° Swept Angle	X17
8091-3141-02	TNC-m / TNC-f 90° Swept Angle	X14
8091-4141-02	TNC-f / TNC-f 90° Swept Angle	X8
8091-5151-02	N-m / N-m 90° Swept Angle	K16
8091-5161-02	N-m / N-f 90° Swept Angle	K12
8091-6161-02	N-f / N-f 90° Swept Angle	K7
8091-KFKF-02	2.92mm-f / 2.92mm-f; 90° Swept angle	C9
8091-KFKM-00	2.92mm-f / 2.92mm-m; 90° Swept angle	C11
8091-KFKM-02	2.92mm-f / 2.92mm-m; 90° Swept angle	C11
8091-KMKM-02	2.92mm-m / 2.92mm-m; 90° Swept angle	C14
8091-S001-02	SMA-m Reverse Sex / SMA-f 90° Swept Angle	Q5
8091-S002-02	TNC-f modified / TNC-m. 90° Swept Angle	X14
8092-3141-02	TNC-m / TNC-f; 90° Swept Angle	X12
8093-1111-02	SMA-m / SMA-m; 90° mitred Angle	P12
8095-1121-05	SMA-m / SMA-f	P9
8095-3141-02	TNC-m / TNC-f; 90° mitred Angle higher power	X13
8095-5161-02	N-m /N-f, 90° mitred right Angle, higher power	K13
8095-6161-02	N-f / N-f; 90° mitred Angle; higher power	K8
809V-3131-02	TNC-m / TNC-m; 90° mitred Angle; higher power	X17
809V-3141-02	TNC-m / TNC-f; 90° mitred Angle; higher power	X13
809V-5161-02	N-m / N-f 90°; mitred right Angleventing holes	K12
80SV-KFKF-U2	2.92mm-f / 2.92mm-f, 4-hole flange, venting	C5
8120-6161-02	N-f / N-f 120° Angle	K8
812U-6161-02	N-f / N-f 120° Angle	K8
8190-1111-02	SMA-m / SMA-m; 90° mitred right Angle	P13
8190-1121-02	SMA-f / SMA-m 90° mitred right Angle	P10
8190-2121-02	SMA-f / SMA-f 90° mitred right Angle	P7

Part Number	Description	Page
8190-3131-02	TNC-m / TNC-m, 90° mitred right angle	X17
8190-3141-02	TNC-m / TNC-f, 90° mitred right angle	X12
8190-3151-02	TNC-m / N-m, 90° mitred right angle	K48
8190-3161-02	TNC-m / N-f; 90° mitred right Angle	K44
8190-4141-02	TNC-f / TNC-f, 90° mitred right Angle	X8
8190-4151-02	TNC-f / N-m, 90° mitred right Angle	K47
8190-4161-02	TNC-f / N-f, 90° mitred right Angle	K41
8190-5151-02	N-m / N-m; 90° mitred right Angle	K16
8190-5161-02	N-f / N-m 90°; mitred right Angle	K14
8190-6161-02	N-f / N-f 90°; mitred right Angle	K7
8190-9191-02	3.5mm-m / 3.5mm-m; 90° swept Angle	D8
8190-9192-02	3.5mm-f / 3.5mm-m; 90° swept Angle	D7
8190-9292-02	3.5mm-f / 3.5mm-f; 90° swept Angle	D5
8190-HF91-02	2.4mm-f / 3.5mm-m; 90° swept Angle	D13
8190-HM91-02	2.4mm-m / 3.5mm-m; 90° swept Angle	D14
8190-HM92-02	2.4mm-m / 3.5mm-f ;90° swept Angle	D12
8190-KF92-02	2.92mm-f / 3.5-f ; 90° swept Angle	D16
8190-KM91-02	2.92mm-m / 3.5-m; 90° swept Angle	D19
8190-KM92-02	2.92mm-m / 3.5-f ; 90° swept Angle	D17
8190-KMKM-02	2.92mm-m / 2.92mm-m; 90° mitred right Angle	C14
825V-4161-02	TNC-f / N-f, higher power, venting holes	K39
8290-3141-02	TNC-m / TNC-f; 90° mitred Angle	X12
8290-5151-02	N-m / N-m; 90° mitred Angle	K16
8290-5161-02	N-f / N-m; 90° mitred Angle	K14
8292-1111-02	SMA-m / SMA-m; 90° mitred Angle	P12
8292-2121-02	SMA-f / SMA-f; 90° mitred Angle	P7
8390-1121-02	SMA-f / SMA-m; 90°; mitred Angle	P10
8393-1111-02	SMA-m / SMA-m; 90° mitred Angle	P13
8393-2121-02	SMA-f / SMA-f; 90° mitred Angle	P7
8490-1121-32	SMA-f / SMA-m; 90°; mitred Angle	P10
8801-3131-02	TNC-m / TNC-m	X18
8801-3141-02	TNC-m / TNC-f	X18
8801-3191-02	TNC-m / 3.5-m	X23
8801-4141-02	TNC-f / TNC-f	X18
8801-4191-02	TNC-f / 3.5-m	X23
8801-4192-02	TNC-f / 3.5-f	X23
8801-5151-02	N-m / N-m	K18
8801-5161-02	N-m / N-f	K18
8801-5191-02	N-m / 3.5mm-m	K27
8801-6161-02	N-f / N-f	K18
8801-6191-02	N-f / 3.5mm-m	K27
8801-7979-02	SC-f / SC-f	N6
8801-7980-02	SC-f / SC-m	N6
8801-8080-02	SC-m / SC-m	N6
8801-9191-02	3.5mm-m / 3.5mm-m	D9
8801-9192-02	3.5mm-m / 3.5mm-f	D9
8801-9292-02	3.5mm-m-f / 3.5mm-f	D9
8801-HF61-02	2.4mm-f / N-f	B9
8801-HF91-02	2.4mm-f / 3.5mm-m	D15

KK

Dimensions shown are Inches over Millimeters or vice versa. Standard units have stainless finish (last 2 digits of the P/N are -02). Interfaces are per DIN 47 223, DIN 47 226, IEC 169-4, IEC 169-7, IEC 169-8, IEC 457-2, IEC 60169-5, IEEE 287, MIL-PRF-39012, MIL DTL-24044, MIL DTL-3643,MIL-STD-348B, where applicable

Spectrum Elektrotechnik GmbH
Germany
www.spectrum-et.com
sales@spectrum-et.com
Phone: +49 / 89 / 35 48 04 0
Fax: +49 / 89 / 35 48 04 90

Part Number	Description	Page
8801-HF92-02	2.4mm-f / 3.5mm-f	D15
8801-HFAJ-42	2.4mm-f / SMP-m	R12
8801-HFHF-02	2.4mm-f / 2.4mm-f	B8
8801-HFHM-02	2.4mm-f / 2.4mm-m	B8
8801-HFKF-02	2.4mm-f / 2.92mm-f	C23
8801-HFKM-02	2.4mm-f / 2.92mm-m	C23
8801-HFQM-42	2.4mm-f / SMPM-m	U6
8801-HFTC-02	2.4mm-f / SMP-m	S13
8801-HFTD-02	2.4mm-f / SMP-m Test-Connector	S13
8801-HFTJ-02	2.4mm-f / SMP-m Precision	S13
8801-HFTL-02	2.4mm-f / SMP-f	S12
8801-HFTP-02	2.4mm-f / SMP-f	S12
8801-HM91-02	2.4mm-m / 3.5mm-m	D15
8801-HM92-02	2.4mm-m / 3.5mm-f	D15
8801-HMHM-02	2.4mm-m / 2.4mm-m	B8
8801-HMKF-02	2.4mm-m / 2.92mm-f	C23
8801-HMKM-02	2.4mm-m / 2.92mm-m	C23
8801-HMQF-42	2.4mm-m / SMPM-f	U6
8801-HMQM-42	2.4mm-m / SMPM-m	U7
8801-HMTB-02	2.4mm-m / SMP-m Test-Conn. Comercial	S14
8801-HMTD-02	2.4mm-m / SMP-m Test-Conn. Smooth B.	S14
8801-HMTJ-02	2.4mm-m / SMP-m; Precision	S14
8801-HMTP-02	2.4mm-m / SMP-f	S12
8801-KF90-02	7mm, 4-slotted contact / 2.92mm-f	E7
8801-KF96-02	7mm, 6-slotted contact / 2.92mm-f	E7
8801-KFKF-02	2.92mm-f / 2.92mm-f	C15
8801-KFKM-02	2.92mm-f / 2.92mm-m	C15
8801-KFTB-02	2.92mm-f / SMP-m Test-Connector	S22
8801-KFTD-02	2.92mm-f / SMP-m Test-Connector	S22
8801-KFTF-02	2.92mm-f / SMP-f; Full Detent	S19
8801-KFTJ-02	2.92mm-f / SMP-m; Test-Connector	S22
8801-KFTL-02	2.92mm-f / SMP-f; limited Detent	S19
8801-KFTP-02	2.92mm-f / SMP-f	S19
8801-KM90-02	7mm, 4-slotted contact / 2.92mm-m	E7
8801-KM96-02	7mm, 6-slotted contact / 2.92mm-m	E7
8801-KMKM-02	2.92mm-m / 2.92mm-m	C15
8801-KMTB-02	2.92mm-m / SMP-m; Test-Connector	S21
8801-KMTD-02	2.92mm-m / SMP-m; Test-Connector	S21
8801-KMTF-02	2.92mm-m / SMP-f Full Detent	S20
8801-KMTJ-02	2.92mm-m / SMP-m; Test-Connector	S21
8801-KMTL-02	2.92mm-m / SMP-f; limited Detent	S20
8801-KMTP-02	2.92mm-m / SMP-f, smooth Bore	S20
8801-PJ11-02	SPM-f / SMA-m	W7
8801-PJ21-02	SPM-f / SMA-f	W7
8801-PM11-02	SPM-m / SMA-m	W7
8801-PM21-02	SPM-m / SMA-f	W7
8801-QFQM-04	SMPM-f / SMPM-m, Full Detent	U5
8801-TB91-02	SMP-m / 3.5mm-m; Test-Connector	S27
8801-TB92-02	SMP-m / 3.5mm-f; Test-Connector	S26

Part Number	Description	Page
8801-TC91-02	3.5mm-m / SMP-m; Test-Connector	S27
8801-TC92-02	3.5mm-f / SMP-m; Test-Connector	S26
8801-TD91-02	3.5mm-m / SMP-m Test-Connector	S27
8801-TD92-02	3.5mm-f / SMP-m Test-Connector	S26
8801-TF91-02	SMP-f / 3.5mm-m; full Detent	S25
8801-TF92-02	SMP-f / 3.5mm-f . Full Detent	S24
8801-TJ91-02	3.5mm-m / SMP-m Test-Connector	S27
8801-TJ92-02	3.5mm-f / SMP-m	S26
8801-TJTJ-02	SMP-m / SMP-m, smooth Bore	S9
8801-TJTP-02	SMP-f / SMP-m, smooth Bore	S8
8801-TL91-02	SMP-f / 3.5mm-m; limited Detent	S25
8801-TL92-02	SMP-f / 3.5mm-f; limited Detent	S24
8801-TLTL-02	SMP-f / SMP-f; limited Detent	S8
8801-TP91-02	3.5mm-m / SMP-f	S25
8801-TP92-02	3.5mm-f / SMP-f	S24
8801-TPTP-02	SMP-f / SMP-f	S8
8802-3141-02	TNC-m / TNC-f	X19
8802-4141-02	TNC-f / TNC-f	X19
8802-5190-02	N-m / 7mm; center contact with 6 Slots	E13
8802-5196-02	N-m / 7mm; center contact with 6 Slots	E13
8802-6190-02	N-f / 7mm; center contact with 4 Slots	E13
8802-HFQM-42	2.4mm-f / SMPM-m, Catcher's Mitt	U6
8802-HMQM-42	2.4mm-m / SMPM-m, Catcher's Mitt	U7
8802-KFTJ-02	2.92mm-f / SMP-m. smooth Bore	S22
8802-KFTP-02	2.92mm-f / SMP-f, smooth Bore	S19
8802-KMTJ-02	2.92mm-m / SMP-m, smooth Bore	S21
8802-KMTP-02	2.92mm-m / SMP-f, smooth Bore	S20
8802-QFQM-04	SMPM-f / SMPM-m, smooth Bore	U5
8802-TJTJ-02	SMP-m / SMP-m, smooth Bore	S9
8802-TJTP-02	SMP-f / SMP-m, smooth Bore	S8
8803-HFQM-42	2.4mm-f / SMPM-m, Catcher's Mitt	U6
8803-HMQM-42	2.4mm-m / SMPM-m, Catcher's Mitt	U7
8803-QFQM-04	SMPM-f / SMPM-m, Catcher's Mitt	U5
885A-3131-00	TNC-m / TNC-m	X17
885A-3131-02	TNC-m / TNC-m	X17
88U1-5151-02	N-m / N-m	K17
88U1-5161-02	N-m / N-f	K19
88U1-6161-02	N-f / N-f	K19
88U1-HF61-02	2.4mm-f / N-f	B9
88U1-HFKF-02	2.4mm-f / 2.92mm-f	C24
88U1-HFKM-02	2.4mm-f / 2.92mm-m	C24
88U1-HMKF-02	2.4mm-m / 2.92mm-f	C24
88U1-HMKM-02	2.4mm-m / 2.92mm-m	C24
8901-TL21-02	TNC-m Push-On / SMA-f	DD36
8901-TL41-02	TNC-m Push-On / TNC-f	DD28
8901-TL61-02	TNC-m Push-On / N-f	DD32
8901-TN21-02	TNC-m Push-On / SMA-f , Non Locking	DD37
8901-TN41-02	TNC-m Push-On / TNC-f , Non Locking	DD29

K
K

Dimensions shown are Inches over Millimeters or vice versa. Standard units have stainless finish (last 2 digits of the P/N are -02). Interfaces are per DIN 47 223, DIN 47 226, IEC 169-4, IEC 169-7, IEC 169-8, IEC 457-2, IEC 60169-5, IEEE 287, MIL-PRF-39012, MIL DTL-24044, MIL DTL-3643,MIL-STD-348B, where applicable

Spectrum Elektrotechnik GmbH
Germany
www.spectrum-et.com
sales@spectrum-et.com
Phone: +49 / 89 / 35 48 04 0
Fax: +49 / 89 / 35 48 04 90

Part Number	Description	Page
8901-TN61-02	TNC-m-Push-On / N-f , Non Locking	DD33
8901-TS21-02	TNC-m-Push-On / SMA-f	DD35
8901-TS41-02	TNC-m-Push-On / TNC-f	DD28
8901-TS61-02	TNC-m-Push-On / N-f	DD32
89U1-TL21-02	TNC-m-Push-On / SMA-f	DD36
89U1-TN21-02	TNC-m-Push-On / SMA-f , Non Locking	DD37
89U1-TN41-02	TNC-m-Push-On / TNC-f , Non Locking	DD29
89U1-TN61-02	TNC-m-Push-On / N-f , Non Locking	DD33
89U1-TS61-02	TNC-m-Push-On / N-f	DD32
8H01-3131-02	TNC-m / TNC-m	X16
8H01-4141-00	TNC-f / TNC-f; high power; Herm, 4-H flange	EE11
8H01-4161-00	TNC-f / N-f, ; Hermetic,BFJ	EE10
8H01-4180-02	TNC-f / SC-m	N10
8H01-6161-00	N-f / N-f, ; Hermetic, 4-hole flange	EE7
8H01-6179-02	N-f / SC-f	N7
8H01-7979-02	SC-f / SC-f	N4
8H01-8080-02	SC-m / SC-m	N5
8H01-HFHF-00	2.4mm-f / 2.4mm-f, Hermetic, BFJ	EE5
8H01-KFKF-00	2.92mm-f / 2.92mm-f, Hermetic, BFJ	EE6
8H01-VFVF-00	1.85mm-f / 1.85mm-f, Hermetic, BFJ	EE4
8H02-4141-00	TNC-f / TNC-f ,4-hole flange; Hermetic	EE11
8H02-6061-00	N-f / N-f, BFJ	EE8
8H03-4141-00	TNC-f / TNC-f, BFJ; Hermetic	EE12
8H0V-4141-00	TNC-f / TNC-f, 4-hole flange; Hermetic	EE11
8H0V-4161-00	TNC-f / N-f ; Hermetic,BFJ	EE10
8H0V-5160-29	N-m / N-f; BFJ	EE9
8H0V-6061-00	N-f / N-f; BFJ	EE8
8H0V-6161-00	N-f / N-f, 4-hole flange; Hermetic	EE7
8H0V-HFHF-00	2.4mm-f / 2.4mm-f, Hermetic, BFJ	EE5
8H0V-KFKF-00	2.92mm-f / 2.92mm-f, Hermetic, BFJ	EE6
8H0V-VFVF-00	1.85mm-f / 1.85mm-f, Hermetic, BFJ	EE4
8H11-4161-00	TNC-f / N-f, Hermetic, BFJ	EE10
8H11-6161-00	N-f / N-f, Hermetic,4-hole.FLange	EE7
8H11-HFHF-00	2.4mm-f / 2.4mm-f, Hermetic, BFJ	EE5
8H11-KFKF-00	2.92mm-f / 2.92mm-f, Hermetic, BFJ	EE6
8H11-VFVF-00	1.85mm-f / 1.85mm-f, Hermetic, BFJ	EE4
8H12-4141-00	TNC-f / TNC-f; 4-hole flange; Hermetic	EE11
8H12-6061-00	N-f / N-f, Hermetic, BFJ	EE8
8H13-4141-00	TNC-f / TNC-f; higher power; BFJ	EE12
8H1V-4141-00	TNC-f / TNC-f, higher power, BFJ	EE13
8H1V-4161-00	TNC-f / N-f, pressurized, BFJ	EE10
8H1V-5160-00	N-m / N-f, BFJ	EE9
8H1V-6161-00	N-f / N-f, Hermetic,4-hole Flange	EE7
8H1V-HFHF-00	2.4mm-f / 2.4mm-f; Hermetic	EE5
8H1V-KFKF-00	2.92mm-f / 2.92mm-f, Hermetic	EE6
8H1V-VFVF-00	1.85mm-f / 1.85mm-f, Hermetic	EE4
8H2V-4141-00	TNC-f / TNC-f,4-hole flange; Hermetic	EE11
8H2V-6061-00	N-f / N-f , Hermetic; BFJ	EE8
8H3V-4141-00	TNC-f / TNC-f,BFJ; Hermetic	EE12

Part Number	Description	Page
8H3V-6061-00	N-f / N-f, Hermetic, BFJ	EE8
8H4V-4141-00	TNC-f / TNC-f, higher power, BFJ	EE12
8H52-4141-00	TNC-f / TNC-f,hole flange; Hermetic	EE11
8H52-6161-00	N-f / N-f; Hermetic,4-holr Flange.	EE7
8H5V-4141-00	TNC-f / TNC-f,4-hole Flange, Hermetic	EE11
8H5V-6061-00	N-f / N-f; higher power; Hermetic; BFJ	EE8
8H5V-6161-00	N-f / N-f, ; Hermetic,4-hole Flange	EE7
8H60-4141-00	TNC-f / TNC-f,BFJ; Hermetic	EE12
8H61-6161-00	N-f / N-f; Hermetic, 4-hole Flange	EE7
8H6V-4141-00	TNC-f / TNC-f, BFJ; Hermetic	EE12
8H6V-6061-00	N-f / N-f, Hermetic, BFJ	EE8
8H6V-6161-00	N-f / N-f,LIM.; Hermetic, 4-hole Flange	EE7
8H71-4141-00	TNC-f / TNC-f,4-hole Flange, Hermetic	EE11
8H81-4141-00	TNC-f / TNC-f,BFJ; Hermetic	EE12
8H8V-4141-00	TNC-f / TNC-f,BFJ; Hermetic	EE12
8LRL-KFKF-02	2.92mm-f / 2.92mm-f	T7
8LRL-KFKM-02	2.92mm-f / 2.92mm-m	T7
8LRL-KMKM-02	2.92mm-m / 2.92mm-m	T8
8LRL-MJMJ-02	SMP-m / SMP-m, short	T6
8LRL-MJMP-02	SMP-m / SMP-f, short	T5
8LRL-MPMP-02	SMP-f / SMP-f, short	T4
8LRL-TJTP-02	SMP-m / SMP-f	T5
8LRM-KFKF-02	2.92mm-f / 2.92mm-f	T7
8LRM-KFKM-02	2.92mm-f / 2.92mm-m	T7
8LRM-KMKM-02	2.92mm-m / 2.92mm-m	T8
8LRM-MJMJ-02	SMP-m / SMP-m, Long	T6
8LRM-MJMP-02	SMP-m / SMP-f, Long	T5
8LRM-MPMP-02	SMP-f / SMP-f	T4
8LRM-TJTP-02	SMP-m / SMP-f	T4
8LRN-TJTP-02	SMP-m / SMP-f	T4
8LRP-TJTP-02	SMP-m / SMP-f	T5
8LRQ-TJTP-02	SMP-m / SMP-f	T6
8M08-SM21-02	SMA-m-Push-On / SMA-f	DD42
8P01-HF92-02	2.4mm-f / 3.5mm-f	D10
8P01-HFKF-02	2.4mm-f / 2.92mm-f	C18
8P01-HFKM-02	2.4mm-f / 2.92mm-m	C19
8P01-HM92-02	2.4mm-m / 3.5mm-f	D11
8P01-HMKF-02	2.4mm-m / 2.92mm-f	C22
8P01-HMKM-02	2.4mm-m / 2.92mm-m	C21
8P01-KF91-02	2.92mm-f / 3.5mm-m	D18
8P01-KF92-02	2.92mm-f / 3.5mm-f	D16
8P01-KFKF-02	2.92mm-f / 2.92mm-f	C4
8P01-KFKM-02	2.92mm-f / 2.92mm-m	C9
8P01-KMKM-02	2.92mm-m / 2.92mm-m	C13
8P45-5161-02	N-m / N-f 135° (45°) Angle	K11
8P90-9191-02	3.5mm-m / 3.5mm-m 90° Swept Angle	D8
8P90-9192-02	3.5mm-f / 3.5mm-m 90° Swept Angle	D7
8P90-9292-02	3.5mm-f / 3.5mm-f 90° Swept Angle	D5

K
K

Dimensions shown are Inches over Millimeters or vice versa. Standard units have stainless finish (last 2 digits of the P/N are -02). Interfaces are per DIN 47 223, DIN 47 226, IEC 169-4, IEC 169-7, IEC 169-8, IEC 457-2, IEC 60169-5, IEEE 287, MIL-PRF-39012, MIL DTL-24044, MIL DTL-3643,MIL-STD-348B, where applicable

Spectrum Elektrotechnik GmbH
Germany
www.spectrum-et.com
sales@spectrum-et.com
Phone: +49 / 89 / 35 48 04 0
Fax: +49 / 89 / 35 48 04 90

Part Number	Description	Page
8P90-HFHF-02	2.4mm-f / 2.4mm-f 90° Swept Angle	B5
8P90-HFHM-02	2.4mm-m / 2.4mm-f 90° Swept Angle	B6
8P90-HMHM-02	2.4mm-m / 2.4mm-m 90° Swept Angle	B7
8P90-HMKF-02	2.4mm-m / 2.92mm-f 90° Swept Angle	C20
8P90-KFKF-02	2.92mm-f / 2.92mm-f 90° Swept Angle	C8
8P90-KFKM-02	2.92mm-f / 2.92mm-m 90° Swept Angle	C11
8P90-KMKM-02	2.92mm-m / 2.92mm-m 90° Swept Angle	C14
8P90-VFVM-02	1.85mm-m / 1.85mm-f 90° Swept Angle	A6
8PU1-HFKF-02	2.4mm-f / 2.92mm-f Precision	C18
8PU1-HFKM-02	2.4mm-f / 2.92mm-m Precision	C19
8PU1-HMKF-02	2.4mm-m / 2.92mm-f Precision	C22
8PU1-HMKM-02	2.4mm-m / 2.92mm-m Precision	C21
8PU1-KFKF-02	2.92mm-f / 2.92mm-f Precision	C4
8PU1-KFKM-02	2.92mm-f / 2.92mm-m Precision	C10
8PU1-KMKM-02	2.92mm-m / 2.92mm-m, Precision	C13
8R11-1111-02	SMA-m / SMA-m, Reverse Sex	Q5
8R11-1121-02	SMA-m Reverse Sex / SMA-f	Q4
8R21-1121-02	SMA-m / SMA-f, Reverse Sex	Q4
8R21-2121-02	SMA-f / SMA-f, Reverse Sex	Q4
8RP1-3161-02	TNC-m Reverse Sex / N-f	Y4
8RP1-TL61-02	TNC-f Push-On Reverse Sex / N-f	DD45
8RP1-TN61-02	TNC-f Push-On Reverse Sex / N-f	DD45
8S90-3141-02	TNC-m / TNC-f	X14
8U01-0361-02	1.4 / 4.4 / N-f	FF4
8U01-1131-02	SMA-m / TNC-m	X30
8U01-1141-02	SMA-m / TNC-f	X28
8U01-1151-02	SMA-m / N-m	K37
8U01-1161-02	SMA-m / N-f	K32
8U01-2131-02	SMA-f / TNC-m	X29
8U01-2141-02	SMA-f / TNC-f	X25
8U01-2151-02	SMA-f / N-m	K35
8U01-2171-02	SMA-f / BNC-m	P14
8U01-2190-02	SMA-f / 7mm; center contact with 4 slots	E14
8U01-2196-02	SMA-f / 7mm; center contact with 6 slots	E14
8U01-3141-02	TNC-m / TNC-f	X10
8U01-3151-02	TNC-m / N-m	K47
8U01-3161-02	TNC-m / N-f	K41
8U01-4141-02	TNC-f / TNC-f	X6
8U01-4151-02	TNC-f / N-m	K44
8U01-4160-02	TNC-f / N-f 4-hole flange	K40
8U01-4161-02	TNC-f / N-f	K39
8U01-4951-02	N-m / TNX-f	Z8
8U01-5151-02	N-m / N-m	K15
8U01-5161-02	N-m / N-f	K9
8U01-5171-02	N-m / BNC-m	K29
8U01-5179-02	N-m / SC-f	N8
8U01-5180-02	N-m / SC-m	N9
8U01-5181-02	N-m / BNC-f	K28

Part Number	Description	Page
8U01-5961-02	N-f / N-f, BFJ	K5
8U01-5M92-02	N-m-Metric / 3.5mm-f	AA9
8U01-6061-02	N-f / N-f 4-hole flange	K6
8U01-6161-02	N-f / N-f	K4
8U01-6171-02	N-f / BNC-m	K28
8U01-6179-02	N-f / SC-f	N7
8U01-6180-02	N-f / SC-m	N8
8U01-6181-02	N-f / BNC-f	K29
8U01-7P8N-02	N-m-Push-On / N-f, 75 Ohms	GG2
8U01-9090-02	7mm, 4-slotted contact / 7mm, 4-slotted contact	E4
8U01-9099-02	7mm; 4-slotted contact / TNC-Special design	O6
8U01-BM51-02	BMA-m / N-m	G6
8U01-BM61-02	BMA-m / N-f	G6
8U01-BW61-02	BMA-f / N-f	G5
8U01-H261-02	N-f / 2.4mm-f-NMD	CC6
8U01-H351-02	3.5mm-f-NMD / N-m	CC13
8U01-H361-02	3.5mm-f-NMD / N-f	CC12
8U01-HF51-02	2.4mm-f / N-m	K21
8U01-HF61-02	2.4mm-f / N-f	K20
8U01-HFHF-02	2.4mm-f / 2.4mm-f	B4
8U01-HFHM-02	2.4mm-f / 2.4mm-m	B6
8U01-HFKF-02	2.4mm-f / 2.92mm-f	C18
8U01-HFKM-02	2.4mm-f / 2.92mm-m	C19
8U01-HFND-02	2.4mm-f / N-NMD-m	CC14
8U01-HM51-02	2.4mm-m / N-m	K21
8U01-HM61-02	2.4mm-m / N-f	K20
8U01-HMHM-02	2.4mm-m / 2.4mm-m	B7
8U01-HMKF-02	2.4mm-m / 2.92mm-f	C22
8U01-HMKM-02	2.4mm-m / 2.92mm-m	C21
8U01-KF51-02	2.92mm-f / N-m	K23
8U01-KF61-02	2.92mm-f / N-f	K22
8U01-KFKF-02	2.92mm-f / 2.92mm-f	C4
8U01-KFKM-02	2.92mm-f / 2.92mm-m	C9
8U01-KMKM-02	2.92mm-m / 2.92mm-m	C13
8U01-ND51-02	N-m / N-m	CC15
8U01-ND92-02	N-NMD-m / 3.5mm-f	CC14
8U01-NL21-02	N-m-Push-On / SMA-f	DD25
8U01-NL41-02	N-m-Push-On / TNC-f	DD23
8U01-NN21-02	N-m-Push-On / SMA-f , Non Locking	DD25
8U01-NN41-02	N-m-Push-On / TNC-f , Non Locking	DD23
8U01-NN61-02	N-m-Push-On / N-f , Non Locking	DD17
8U01-NS21-02	N-m-Push-On / SMA-f	DD24
8U01-NS41-02	N-m-Push-On / TNC-f	DD22
8U01-S006-02	7mm, 4-slotted contact / Special design	O6
8U01-TL21-02	TNC-m Push-On / SMA-f	DD35
8U01-TL41-02	TNC-m Push-On / TNC-f	DD27
8U01-TL61-02	TNC-m Push-On / N-f	DD31
8U01-TN21-02	TNC-m Push-On / SMA-f , Non Locking	DD37

K
K

Dimensions shown are Inches over Millimeters or vice versa. Standard units have stainless finish (last 2 digits of the P/N are -02). Interfaces are per DIN 47 223, DIN 47 226, IEC 169-4, IEC 169-7, IEC 169-8, IEC 457-2, IEC 60169-5, IEEE 287, MIL-PRF-39012, MIL DTL-24044, MIL DTL-3643,MIL-STD-348B, where applicable

Spectrum Elektrotechnik GmbH
Germany
www.spectrum-et.com
sales@spectrum-et.com
Phone: +49 / 89 / 35 48 04 0
Fax: +49 / 89 / 35 48 04 90

Part Number	Description	Page
8U01-TN41-02	TNC-m Push-On / TNC-f , Non Locking	DD29
8U01-TN61-02	TNC-m Push-On / N-f , Non Locking	DD33
8U01-TS21-02	TNC-m Push-On / SMA-f	DD34
8U01-TS41-02	TNC-m Push-On / TNC-f	DD27
8U01-TS61-02	TNC-m Push-On / N-f	DD31
8U01-WI90-02	7mm, 4-slotted contact / 2.92mm-f-NMD	CC9
8U02-0361-02	1.4 / 4.4 / N-f	FF4
8U02-1151-02	SMA-m / N-m	K38
8U02-1161-02	SMA-m / N-f, 4-hole flange	K33
8U02-2131-02	SMA-f / TNC-m	X30
8U02-2141-02	SMA-f / TNC-f	X26
8U02-2151-02	SMA-f / N-m	K35
8U02-3141-02	TNC-m / TNC-f	X10
8U02-3190-02	TNC-m / 7mm; center contact with 4 slots	E16
8U02-3196-02	TNC-m / 7mm; center contact with 6 Slots	E16
8U02-4151-02	TNC-f / N-m	K45
8U02-4190-02	7mm, 4-slotted contact / TNC-f	E16
8U02-4196-02	TNC-f / 7mm; center contact with 6 Slots	E16
8U02-4961-02	TNX-f / N-f	Z7
8U02-5191-02	N-m / 3.5mm-m	K26
8U02-5192-02	N-m / 3.5mm-f	K26
8U02-6061-02	N-f / N-f, BFJ	K5
8U02-6191-02	N-f / 3.5mm-m	K25
8U02-6192-02	N-f / 3.5mm-f	K24
8U02-KFKF-02	2.92mm-f / 2.92mm-f, 4-hole flange	C5
8U02-NL61-02	N-m-Push-On / N-f	DD16
8U02-NL61-13	N-m-Push-On, Double-D / N-f	DD17
8U02-NS61-02	N-m-Push-On, Double-D / N-f	DD15
8U02-NS61-13	N-m-Push-On, Double-D / N-f	DD16
8U02-TS21-02	TNC-m Push-On, Double-D / SMA-f	DD35
8U03-1161-02	SMA-m / N-f, 4-hole flange	K33
8U03-2151-02	SMA-f / N-m, 4-hole flange	K36
8U03-2161-02	SMA-f / N-f; BFJ	K31
8U03-3190-02	TNC-m / 7mm; center contact with 4 slots	E17
8U03-4141-02	TNC-f / TNC-f; 4-hole flange	X6
8U03-6191-02	N-f / 3.5mm-m, 4-hole flange	K25
8U03-6192-02	N-f / 3.5mm-f, 4-hole flange	K24
8U03-KFKF-02	2.92mm / 2.92mm, BFJ	C6
8U03-NL61-02	N-m-Push-On / N-f	DD20
8U03-NL61-13	N-m-Push-On, Bulkhead. / N-f	DD20
8U03-NS21-02	N-m-Push-On, Bulkhead / SMA-f	DD24
8U03-NS61-02	N-m-Push-On, Bulkhead / N-f	DD19
8U03-NS61-13	N-m-Push-On, Bulkhead / N-f	DD19
8U04-1161-02	SMA-m / N-f	K34
8U04-2151-02	SMA-f / N-m, 4-Hole Flange	K36
8U04-2161-02	SMA-f / N-f, 4-hole flange	K31
8U04-4141-02	TNC-f / TNC-f; BFJ	X7
8U05-1161-02	SMA-m / N-f; BFJ	K34

Part Number	Description	Page
8U05-2151-02	SMA-f / N-m	K37
8U05-2161-02	SMA-f / N-f	K30
8U06-2161-02	SMA-f / N-f, 4-hole flange, gasket	K32
8U0V-2141-02	SMA-f / TNC-f	X25
8U0V-4161-02	TNC-f / N-f	K39
8U0V-4192-02	TNC-f / 3.5-f	X21
8U0V-KFKF-02	2.92mm-f / 2.92mm-f	C4
8U90-3161-02	TNC-m / N-f 90° mitred Angle	K43
8U90-5161-02	N-m / N-f 90° mitred Angle	K12
8U90-HFHM-02	2.4mm-m / 2.4mm-f , 90° swept Angle	B6
8U90-KFKF-02	2.92mm-f / 2.92mm-f 90° Swept Angle	C8
8U90-KFKM-02	2.92mm-f / 2.92mm-m 90° Swept Angle	C10
8U90-ND61-02	N-m / N-f 90° mitred Angle	K13
8U9V-KFKM-02	2.92mm-f / 2.92mm-m 90° Swept Angle	C10
8V51-3141-00	TNC-f / TNC-m, higher power	X11
8V51-3161-00	TNC-m / N-f, higher power.	K42
8V51-5161-00	N-m / N-f, higher power	K10
9401-9090-07	SCC-m / SCC-f	O4
9499-6001-02	SCC-f / SCC-f	O4
9499-6005-U2	SCC-f / SCC-f	O5
AQ-SB0-001NN	Multiport Adapter 37 Ports	II8
AQ-TR0-001NN	Multiport Adapter 10 Ports	II6
KU-EA31-13	3 1/8 to 3 1/8 EIA Adapter	FF20
KU-EA58-13	1 5/8 to 1 5/8 EIA Adapter	FF16

K
K

Dimensions shown are Inches over Millimeters or vice versa. Standard units have stainless finish (last 2 digits of the P/N are -02). Interfaces are per DIN 47 223, DIN 47 226, IEC 169-4, IEC 169-7, IEC 169-8, IEC 457-2, IEC 60169-5, IEEE 287, MIL-PRF-39012, MIL DTL-24044, MIL DTL-3643,MIL-STD-348B, where applicable

Spectrum Elektrotechnik GmbH
Germany
www.spectrum-et.com
sales@spectrum-et.com
Phone: +49 / 89 / 35 48 04 0
Fax: +49 / 89 / 35 48 04 90

Europe

Czech Republic

Abditus Sp. z o.o.

ul. Gubinska 8/62
54-434 Wroclaw - Poland

Contact: Mr. Thomas Luszpinski
Phone: +48 71-75-034-64
Fax: +48 71-72-313-45
E-mail: info@abditus.pl
Web Page: www.abditus.pl

Italy

Selint S.r.l.

Via del Fontanile Anagnino 50/52
00118 Roma (Rome) - Italy

Contact: Mr. Roberto Mazza
Phone: +39-679-841-028 / 679-841-418
Fax: +39-679-845-609
Email: info@selint.it
Web Page: www.selint.it

France

Elhyte

8-10 Rue du Bois Sauvage
Bat Q
91000 Evry - France

Contact: Mr. David Duval
Phone: Tel: +33 (0) 171 63 14 30
Fax: +33-01-690-150-75
E-mail: commercial@elhyte.fr
Web Page: www.elhyte.fr

Poland

Abditus Sp. z o.o.

ul. Gubinska 8/62
54-434 Wroclaw - Poland

Contact: Mr. Thomas Luszpinski
Phone: +48 71-75-034-64
Fax: +48 71-72-313-45
E-mail: info@abditus.pl
Web Page: www.abditus.pl

Hungary

Abditus Sp. z o.o.

ul. Gubinska 8/62
54-434 Wroclaw - Poland

Contact: Mr. Thomas Luszpinski
Phone: +48 71-75-034-64
Fax: +48 71-72-313-45
E-mail: info@abditus.pl
Web Page: www.abditus.pl

Slovakia

Abditus Sp. z o.o

ul. Gubinska 8/62
54-434 Wroclaw
Poland

Contact: Tomasz Luszpinski
Phone: +48 71 750 3464
Fax: +48 71 723 1345
E-mail: info@abditus.pl

Israel

IMC Microwave industries Ltd.
LEADING RF & MICROWAVE OEM

6 Nahshon st.
Petach-Tikva, 4927795
Israel
Contact: Mr. Eshel Ayalon
General Manager
Tel: 972-3-9300464
Fax: 972-3-9342056
Email: eshel@imc-mw.co.il
URL: www.imc-mw.com

Spain

ERCOMS Solutions S.L.

Calle Luis Barahona de Soto
6-Bloque 3, 2-B
29004 Malaga, SPAIN

Contact: Mrs. Estefania Ruiz
Phone: +34 (0)655 - 256 776
eMail: estefania@ercoms.es
URL: www.ercoms.es

Europe

UK

Microtek Components Ltd

Unit 25 Kingfisher Court
Hambridge Road
Newbury, Berkshire, RG14 5SJ

Contact: Mr. Andrew Sanders; Mr. Rob Valentine
Phone: +44 (0)1635 522292
Fax: +44 (0)1635 524174
Email: rob@microtekcomps.co.uk
Web: www.microtekcomps.co.uk

United States of America

Centre frequency Technical Marketing

PO Box 229
125 South Pensylvania Ave.
Centre Hall, PA 16828, USA
Representative for all Spectrum products in the following mentioned cities/territories in the United States:
- Pennsylvania
- Southern New Jersey
- Delaware

Contact: Richard P. Whitman
Phone: +1 814 - 364 9867
eMail: rwhitman@cf-tm.com

WILSON CO.

PO Box 466
Towaco, NJ 07082, USA
Representative all Spectrum products in the following mentioned cities/territories in the United States:
- New York
- Northern New Jersey
- Connecticut

Contact: George Wilson
Phone: +1 973 - 335 3550
Fax: +1 973 - 335 3980
eMail: gwwilsonco@aol.com

We are looking for additional Representatives in the USA and Canada

Dimensions shown are Inches over Millimeters or vice versa. Standard units have stainless finish (last 2 digits of the P/N are -02). Interfaces are per DIN 47 223, DIN 47 226, IEC 169-4, IEC 169-7, IEC 169-8, IEC 457-2, IEC 60169-5, IEEE 287, MIL-PRF-39012, MIL DTL-24044, MIL DTL-3643,MIL-STD-348B, where applicable

Asia

Shanghai Fintest Technology Development Co., Ltd.
Room A1216, Tomson Centre
No.188 Zhang Yang Road
201318 Shanghai, CHINA

Representative and Distributor for all Spectrum products in the following mentioned cities/territories in China:
- Shanghai
- Nanjing (province of Jiangsu)
- Chengdu (province of Sichuan)
- Kanton (province of Guangdong)

Contact: Mr. Henry Yu, Mr. Benson Liu
Phone: +86 (0)21 - 6838 0250
Fax: +86 (0)21 - 6838 0251
eMail: sales@fin-test.com
URL: http://www.fin-test.com/EN/

Shenzen Hanlunda Industrial Co., Ltd.
Rm USTV, 11/F., Block A, Fortune Plaza
No.7002 Shennan Road, Futian District
518040 Shenzen,CHINA

Representative and Distributor for all Spectrum products in the following mentioned cities/territories in China:
- Province Anhui
- Beijing
- Province Hebei

Contact: Mr. John Yu
Phone: +86 (0)755 - 8302 1316, 8302 1690, 8287 9200
Fax: +86 (0)755 - 8302 1987
eMail: john@hanlunda.com
URL: http://www.hanlunda.com

CHINA

Shenzhen Unibetter Electronics Co. Ltd.
Room 2008-2015, Fu Ji Park Building
No. 1008, Bu Ji Road, Luo Hu District
518003 Shenzen, Guandong ,CHINA

Representative and Distributor for all Spectrum products, but only in cities and territories not mentioned at the other Chinese reps.

Contact: Mrs. Cissie Liu
Phone: +86 (0)755 2542-9125, Exit:606
Fax: +86 (0)755 - 2542 9135
eMail: sales@unibetter-ic.com
URL: http://www.unibetter-ic.com

ShangHai HangOu Mechanical And Electrical Equipment Co. Ltd
Room 905, Building No.1, Guoson Centre
Lane 388, Zhongjiang Road
200062 Shanghai,CHINA

Distributor only for Spectrum Tools

Contact: Mrs. Lisa Zou
Phone: +86 (0)21 - 5108 5161, +86 (0)21 - 5239 1901
Fax: +86 (0)21 - 5187 0910, +86 (0)21 - 5239 1837
eMail: sales@shhangou.com, sales@shhangou.com.cn
URL: http://www.shhangou.com, http://www.shhangou.com.cn

INDIA

Deltronic Marketing Corporation

DMC Centre
49 Entrenchment Road
Secunderabad 500 026, INDIA

Contact: Mr. Dev Kushlani
Phone: +91 (0)40 - 2773 1530, 2773 2993
Fax: +91 (0)40 - 2773 2864, 2773 1248
eMail: dk@deltronic.in
URL: http://www.dmcindia.in

JAPAN

AmTechs Corporation

5-20-16, Kyodo, Setagaya-ku
Tokyo 156-0052, JAPAN

Contact: Mr. Ken Satoh
Phone: +81 (0)3 - 5450 5311
Fax: +81 (0)3 - 5450 5312
eMail: rf@amtechs.co.jp
URL: http://www.amtechs.co.jp

Dimensions shown are Inches over Millimeters or vice versa. Standard units have stainless finish (last 2 digits of the P/N are -02). Interfaces are per DIN 47 223, DIN 47 226, IEC 169-4, IEC 169-7, IEC 169-8, IEC 457-2, IEC 60169-5, IEEE 287, MIL-PRF-39012, MIL DTL-24044, MIL DTL-3643,MIL-STD-348B, where applicable

Asia

MALAYSIA

Wiselink Technolgy SDN BHD

12 Jalan Mutiara Emas 5/14, Taman Mount Austin
81100 Johor Bahru, Johor,MALAYSIA

Phone: +607 - 3556 116
Fax: +607 - 2875 233
eMail: wmsales@wiselink.com.sg
URL: http://www.wiselink.com.sg

SOUTH KOREA

UNIWAVES

Suite 16-231 International Distribute Complex
LSro92 Anyang
14117 KOREA

Contact: Mr. J.C. Kim
Phone: +82 (31) - 427 82 69
Fax: +82 (31) - 427 82 68
eMail: jckim@uniwaves.co.kr

RUSSIA

NKT ZAO

Dolgorukovskaya 40, Building S
127006, Moskow, RUSSIA

Contact: Mr. Alexey Gavrilov
Phone: +7 (495) - 787 05 50
Fax: +7 (495) - 787 77 82
eMail: info@nkt-rf.ru
URL: http://www.nkt-rf.ru

THAILAND

Wiselink Technology (Thailand) Co., Ltd.

292/11 Moo 4, Taladbangkhen, Laksi
Bangkok 10210, THAILAND

Phone: +66 (0)2 - 552 52 07
Fax: +66 (0)2 - 552 89 91
eMail: wtsales@wiselink.com.sg
URL: http://www.wiselink.com.sg

SINGAPORE

Wiselink Technology PTE Ltd. (HQ)

629 Aljunied Road
07-05 Cititech Induatrial Building
Singapore 389838, SINGAPORE

Contact: Mr. Robert Lim, Managing Director
Phone: +65 - 674 660 66
Fax: +65 - 674 660 77
eMail: sales@wiselink.com.sg
URL: http://www.wiselink.com.sg

LL

Dimensions shown are Inches over Millimeters or vice versa. Standard units have stainless finish (last 2 digits of the P/N are -02). Interfaces are per DIN 47 223, DIN 47 226, IEC 169-4, IEC 169-7, IEC 169-8, IEC 457-2, IEC 60169-5, IEEE 287, MIL-PRF-39012, MIL DTL-24044, MIL DTL-3643,MIL-STD-348B, where applicable

The 2021 Handbook

Spectrum Elektrotechnik GmbH

Adapters

80905 Munich, Germany
P.O. Box 450533
Telephone: +49-89-3548-040
Facsimile: +49-89-3548-0490
www.spectrum-et.com * Email: sales@spectrum-et.com